PROJECT MANUAL

Sierra Creek Community Park

7781 Watt Ave

Antelope, Sacramento County, CA 95843

North Highlands Recreation and Park District

6040 Watt Ave

North Highlands, CA 95660

TABLE OF CONTENTS

GENERAL AND SPECIAL PROVISIONS

1 BIDDING REQUIREMENTS 1-8

1.1 INVITATION TO BID 1-8

1.2 BID 1-10

1.3 BID SCHEDULE (ON-SITE WORK) 1-12

NOTE: "TOTAL BASE BID" IS INCLDED ON THE NEXT PAGE. 1-14

BID SCHEDULE (OFF-SITE WORK) 1-14

1.4 DESIGNATION OF SUBCONTRACTORS 1-16

1.5 BID BOND 1-19

1.6 EXPERIENCE QUALIFICATIONS 1-21

1.7 NONCOLLUSION DECLARATION TO BE EXECUTED BY BIDDER AND SUBMITTED WITH BID (PUBLIC CONTRACT CODE SECTION 7106) 1-23

1.8 ACKNOWLEDGMENT OF INSURANCE AND BONDING REQUIREMENTS 1-24

1.9 IRAN CONTRACTING ACT CERTIFICATION 1-25

2 CONTRACT FORMS 2-1

2.1 CONTRACT 2-1

2.2 FAITHFUL PERFORMANCE BOND 2-3

2.3 PAYMENT BOND 2-6

2.4 CONTRACTOR'S WORKERS' COMPENSATION CERTIFICATE (LABOR CODE SECTION 1861) 2-9

3 ABBREVIATIONS AND DEFINITIONS 3-1

3.1 ABBREVIATIONS 3-1

3.2 DEFINITIONS 3-3

4 INSTRUCTIONS TO BIDDERS 4-1

4.1 INTRODUCTION 4-1

4.2 PLANS 4-1

4.3 LOCAL CONDITIONS 4-1

4.4 FORM OF BID AND SIGNATURE 4-3

4.5 SUBMISSION OF BIDS 4-3

4.6 PREPARATION OF THE BID 4-3

4.7 BID GUARANTEE 4-4

4.8 LIST OF SUBCONTRACTORS; SUBCONTRACTING LIMITS 4-4

4.9 INTERPRETATION OF CONTRACT DOCUMENTS 4-5

4.10 MODIFICATION OF BIDS 4-5
4.11 WITHDRAWAL AND RETURN OF BIDS 4-5
4.12 DISCREPANCIES 4-5
4.13 SERVICING AND MAINTENANCE 4-5
4.14 DISQUALIFICATION OF BIDDERS 4-6
4.15 AWARD OF CONTRACT 4-6
4.16 CONTRACT BONDS 4-6
4.17 EXECUTION OF CONTRACT 4-7
4.18 RETURN OF BID GUARANTEES 4-7
4.19 POWER OF ATTORNEY 4-7
4.20 TIME OF COMPLETION 4-8
4.21 LICENSING REQUIREMENTS FOR CONTRACTORS 4-8
4.22 PREVAILING WAGES 4-8
4.23 BID PROTEST 4-8
4.24 INELIGIBLE CONTRACTORS AND SUBCONTRACTORS 4-9
4.25 AUDIT OF BID DOCUMENTS 4-9
4.26 SUBSTITUTIONS DURING BIDDING 4-9
5 GENERAL CONDITIONS 5-1
5.1 INTENT OF CONTRACT DOCUMENTS/MEANS AND METHODS 5-1
5.2 CONTRACTOR'S UNDERSTANDING 5-1
5.3 CHANGES IN THE WORK 5-2
5.4 ADJUSTMENTS FOR PRICE INCREASES 5-5
5.5 CLAIMS AND RESOLUTION OF DISPUTES 5-6
5.6 GUARANTEE 5-12
5.7 AUTHORITY OF THE ENGINEER 5-13
5.8 DRAWINGS 5-13
5.9 CONSTRUCTION STAKING AND SURVEYS 5-15
5.10 PERMITS AND REGULATIONS 5-15
5.11 CONFORMITY WITH CONTRACT DOCUMENTS 5-15
5.12 COORDINATION & INTERPRETATION OF CONTRACT DOCUMENTS 5-16
5.13 SUBCONTRACTS 5-16
5.14 COOPERATION OF CONTRACTORS 5-17
5.15 SUPERINTENDENCE 5-17
5.16 INSPECTION OF WORK 5-17
5.17 TESTS 5-19

5.18 REMOVAL OF REJECTED/UNAUTHORIZED WORK AND MATERIALS 5-20
5.19 DEDUCTIONS FOR UNCORRECTED WORK.....5-20
5.20 EQUIPMENT AND PLANTS.....5-20
5.21 CHARACTER OF WORKER.....5-21
5.22 SEPARATE CONTRACTS.....5-21
5.23 MATERIALS.....5-21
5.24 STORAGE OF MATERIALS; STORAGE AREAS.....5-22
5.25 TRADE NAMES AND ALTERNATIVES.....5-22
5.26 CERTIFICATES OF COMPLIANCE.....5-22
5.27 CERTIFICATES OF REPORTED COMPLIANCE 5-23
5.28 ASSIGNMENT.....5-23
5.29 DISTRICT ENTRY ON WORKSITE; RIGHT TO OPERATE UNSATISFACTORY EQUIPMENT OR FACILITIES.....5-23
5.30 LANDS FOR WORK; RIGHTS OF WAY; CONSTRUCTION ROADS; TEMPORARY UTILITY SERVICES.....5-24
5.31 PROGRESS SCHEDULE 5-25
5.32 COMMENCEMENT AND PROGRESS OF THE WORK AND TIME OF COMPLETION; CONSTRUCTION SEQUENCE.....5-25
5.33 DELAYS.....5-26
5.34 EXTENSIONS OF TIME.....5-27
5.35 DELAY DAMAGES 5-28
5.36 SUSPENSION OF WORK.....5-29
5.37 TERMINATION FOR DEFAULT; DAMAGES FOR DELAY; TIMELY EXTENSION 5-30
5.38 RIGHTS OF DISTRICT UPON TERMINATION 5-32
5.39 FAILURE TO COMPLETE THE WORK IN THE TIME AGREED UPON; LIQUIDATED DAMAGES 5-33
5.40 CLEAN UP.....5-33
5.41 COMPLIANCE WITH LAWS; PERMITS; TAXES.....5-34
5.42 PREVAILING WAGE PENALTIES; WAGE CLAIMS PROHIBITED 5-35
5.43 LABOR DISCRIMINATION.....5-35
5.44 EIGHT HOUR DAY LIMITATION; CERTIFIED PAYROLL REPORTS.....5-35
5.45 EMPLOYMENT OF APPRENTICES 5-36
5.46 WATER POLLUTION.....5-37
5.47 PATENTS.....5-38
5.48 USE OF ARTIFICIAL INTELLIGENCE 5-39

5.49 PUBLIC CONVENIENCE 5-39
5.50 UNDERGROUND UTILITIES 5-40
5.51 SAFETY AND TRENCHING 5-40
5.52 PROTECTION OF PERSON AND PROPERTY 5-43
5.53 HAZARDOUS MATERIALS; HAZARD COMMUNICATION 5-44
5.54 RESPONSIBILITY FOR REPAIR OF FACILITIES 5-45
5.55 DISTRICT'S REPAIR 5-45
5.56 CONTRACTOR'S LICENSE NOTICE 5-46
5.57 PUBLIC WORKS CONTRACTOR REGISTRATION 5-46
5.58 INSURANCE 5-46
5.59 INDEMNITY AND DEFENSE OBLIGATION 5-49
5.60 PROTECTION OF WORK 5-50
5.61 ACCIDENTS 5-52
5.62 NO PERSONAL LIABILITY 5-53
5.63 MEASUREMENT OF QUANTITIES 5-53
5.64 SCOPE OF PAYMENT 5-53
5.65 PROGRESS ESTIMATE 5-53
5.66 PROGRESS PAYMENTS 5-54
5.67 COMPLETION AND FINAL ACCEPTANCE 5-58
5.68 FINAL PAYMENT 5-60
5.69 FINAL RELEASE 5-60
5.70 RIGHT TO WITHHOLD PAYMENTS 5-63
5.71 WAIVER OF INTEREST 5-63
5.72 SATISFACTION OF CLAIMS AND LIENS 5-63
5.73 ASSIGNMENT OF ANTI-TRUST CLAIMS 5-64
5.74 AVAILABILITY AND AUDIT OF INFORMATION 5-64
5.75 INTEGRATION 5-65
5.76 COUNTERPARTS AND ELECTRONIC SIGNATURES 5-65
5.77 WAIVER 5-65
5.78 REMEDIES NOT EXCLUSIVE 5-65
5.79 SEVERABILITY 5-65
5.80 GOVERNING LAW AND VENUE 5-65
5.81 NOTICES 5-66

6 SPECIAL PROVISIONS 6.1
PROPOSITION 68 - STATE PARKS GRANT REQUIREMENTS 6-1
BID ITEM DESCRIPTIONS (ON-SITE) 6-3
BID ITEM DESCRIPTIONS (ON-SITE) 6-19

GENERAL REQUIREMENTS AND TECHNICAL SPECIFICATIONS

DIVISION 01 – GENERAL REQUIREMENTS
SECTION 011100 – SUMMARY ..... 1 - 4
SECTION 012500 – SUBSTITUTION PROCEDURES ..... 1 - 3
SECTION 013100 – PROJECT MANAGEMENT AND COORDINATION ..... 1 – 10
SECTION 013300 – SUBMITTAL PROCEDURES ..... 1 - 9
SECTION 014000 – QUALITY REQUIREMENTS ..... 1 - 11
SECTION 015000 – TEMPORARY FACILITIES AND CONTROLS ..... 1 - 9
SECTION 015639 – TEMPORARY TREE AND PLANT PROTECTION ..... 1 - 8
SECTION 016000 – PRODUCT REQUIREMENTS ..... 1 - 7
SECTION 017419 – CONSTRUCTION WASTE MANAGEMENT ..... 1 - 7
SECTION 017700 – CLOSEOUT PROCEDURES ..... 1 – 6
SECTION 017823 – OPERATION AND MAINTENANCE DATA ..... 1 - 8
SECTION 017839 – PROJECT RECORD DOCUMENTS ..... 1 - 5
DIVISION 02 – EXISTING CONDITIONS
SECTION 024119 – SELECTIVE DEMOLITION ..... 1 - 7
DIVISION 03 – CONCRETE
SECTION 033000 – CAST-IN-PLACE CONCRETE ..... 1 – 18
SECTION 032000 – CONCRETE REINFORCING ..... 1 - 5
DIVISION 04 – 10
NOT USED
DIVISION 11 – EQUIPMENT
SECTION 116800 – PLAY EQUIPMENT AND STRUCTURES 1- 5
DIVISION 12 - 30
NOT USED
DIVISION 31 – EARTHWORK
SECTION 311000 – SITE CLEARING 1- 7
DIVISION 32 – EXTERIOR IMPROVEMENTS
SECTION 321313 – CONCRETE PAVING ..... 1 – 13

SECTION 321373 – CONCRETE PAVING JOINT SEALANTS ..... 1 - 5
SECTION 321816.13 – PLAYGROUND PROTECTIVE SURFACING ..... 1 – 6
SECTION 323119 – DECORATIVE METAL FENCES AND GATES ..... 1 - 8
SECTION 323300- SITE FURNISHINGS..... 1 - 9
SECTION 328400 – PLANTING IRRIGATION ..... 1 – 14
SECTION 329113 – SOIL PREPARATION ..... 1 - 12
SECTION 329200 – TURF AND GRASSES ..... 1 - 9
SECTION 329300 – PLANTS ..... 1 - 14
DIVISION 33 – 48
NOT USED

APPENDICES

A. GEOTECHNICAL EXPLORATION REPORT
B. AGRONOMIC SOILS REPORT

1 BIDDING REQUIREMENTS

1.1 INVITATION TO BID

Sealed proposals will be received at the office of the North Highlands Recreation and Park District, located at North Highlands Recreation and Park District, 6040 Watt Ave, North Highlands, CA 95660, until 2:00 p.m. local time on October 8, 2026 or such later date as may be set by addendum, and then will be publicly opened and read for the construction of the following public works project:

> Sierra Creek Community Park (Park Site) - Scope of work including but not limited to: construction of a new community park with play equipment, shade shelters, picnic areas, picnic tables and BBQs, a parking lot with electric vehicle charging stations, a space for a community garden, fencing, planting and irrigation, restroom building, power and lighting, and pedestrian bridge over the existing Sierra Creek in the park.
>
> Watt Avenue Street Improvements (Off-Site) - Scope of work for off-site improvements includes but not limited to: Construction of U-Turn Lane, asphalt pavement, curbs, gutters and sidewalks, driveways and median improvements including landscape, traffic signal modification and striping.

The contract documents for the Project, including the public works construction contract, instructions to bidders, bid forms, plans and specifications, may be examined at the District office, with prior notice to the District's representative, located at 6040 Watt Ave, North Highlands, CA 95660. Bidders must comply with the Instructions to Bidders.

The District will hold a pre-bid conference at the District Office, 6040 Watt Avenue, North Highlands, CA on September 17, 2026, at 2:00 p.m. It is suggested that each prospective bidder review the bid documents and project site prior to the pre-bid conference. Each prospective bidder shall be required to attend the pre-bid conference. Bids from any bidder not attending this conference will be rejected as non-responsive.

Each Bid must be submitted on the prescribed forms and accompanied by cash, a cashier's check, certified check or bid bond executed on the prescribed form payable to the District in an amount not less than 10 percent of the amount bid.

Bidders shall submit prices for both the On-Site Work and the Off-Site Work. The Total Base Bid shall be the sum of the Base Bid, On-Site Only, and the Base Bid, Off-Site Only (See Section 1.3 and 1.4 of the Bidding Requirements). Award, if made, will be made to the lowest responsive responsible bidder based on the Total Base Bid. The Contract Price shall include both the On-Site Work and the Off-Site Work.

The successful bidder will be required to furnish a payment bond and faithful performance bond each in the full amount of the Contract price, and insurance with certificates and endorsements of insurance, as provided in the Contract Documents. The required bonds must be provided only by a surety insurer who is admitted to do business by and in good standing with the California Department of Insurance.

Bidders are hereby notified that in accordance with Public Contract Code section 22300, securities may be substituted for any monies that the District may withhold pursuant to the terms of this Contract to ensure performance.

The successful bidder must possess the following classification or type of contractor's license issued by the Contractors State License Board: Class A, California.

To be qualified to bid on this Project, bidders must be registered and qualified to perform public work with the Department of Industrial Relations pursuant section 1725.5 of the Labor Code. All subcontractors listed in a qualified bidder's bid as performing any portion of the work also must be registered and qualified with the Department of Industrial Relations.

Prior to award of the Contract, the successful Bidder shall submit to the Agency copies of valid Certificates of Reported Compliance, as described in section 2449(i) and 2449(n) of Title 13 of the California Code of Regulations, for the fleet selected to perform such work proposed in the bid. If applicable, subcontractors must submit copies of valid Certificates of Reported Compliance, as well. If the successful bidder does not submit the necessary Certificates of Reported Compliance, the bid will be disqualified.

Bids that equal or exceed $1,000,000 must be accompanied by an Iran Contracting Act certification in the form provided in section 1.9.

The attention of bidders is directed to the requirements and conditions of employment to be observed and prevailing wage rates to be paid to all workers employed under the Contract in accordance with Labor Code sections 1770 and following. Copies of the prevailing rate of per diem wages are on file at the District's office and will be made available to any interested party on request. In accordance with Labor Code section 1771.4(a)(1), this project is subject to compliance monitoring and enforcement by the Department of Industrial Relations.

This project is subject to special funding conditions set forth in section 6.

The District reserves the right to reject all bids. Any bid not conforming to the intent and purpose of the Contract Documents may be rejected. The District may extend the time to award the Contract.

Dated: _____

North Highlands Recreation and Park District

By: _____

Scott Graham, District Administrator

1.2 BID

TO: North Highlands Recreation and Park District, 6040 Watt Ave, North Highlands, CA 95660

The undersigned states and declares as follows:

That the Bidder has carefully examined the location of the proposed work; that the Bidder has examined the Contract Documents entitled: Sierra Creek Community Park; that the Bidder has read the accompanying Instructions to Bidders; that the Bidder hereby proposes to begin work and complete the project in accordance with the schedule and deadlines in the Contract Documents; that the Bidder hereby proposes to furnish all labor, materials, tools, and equipment, and to perform all work required, complete in place, in compliance with all terms and condition and requirements of the Contract Documents; and that the Bidder will take in full payment for the work the prices set forth in the accompanying bid schedule.

The Bidder acknowledges that the following quantities are approximate only, being given as a basis for the comparison of proposals, that the District does not expressly or by implication agree that the actual amount of the work will correspond therewith, and that the District reserves the right to increase or decrease the amount of any class or portion of the work, as may be deemed necessary or advisable by the Engineer.

The following surety or sureties have agreed to furnish payment and faithful performance bonds to the Bidder if it is awarded the contract:

Name of Performance Bond Surety: _____

Name of Payment Bond Surety: _____

BIDDER INFORMATION

Bidder Name: _____

Type of Business Entity and State of Incorporation (e.g., corporation, limited liability company, partnership): _____

Contractor's License No.: _____

DIR Public Works Contractor Registration No.: _____

Expiration Date: _____

Type of license: _____

Name under which license is held: _____

Status of license: _____

The Bidder's authorized officer identified below hereby declares that the representations in this Bid are true and correct and of my own personal knowledge, and that these representations are made under penalty of perjury under the laws of the State of California.

Authorized Signature: _____

Printed Name: _____

Title: _____

Date: _____

Address: _____

_____

Phone: _____

Fax: _____

Email: _____

1.3 BID SCHEDULE (ON-SITE WORK)

Item No.	Item	Unit of measure	Estimated quantity	Unit price (in figures)	Item total (in figures)
A - SITE PREPARATION					
1	Demolition / Clear and Grub	SF	261300		
2	Erosion Control	AC	6		
3	Site Grading (Rough/Fine)	SF	150,000		
4	Tree Removal	EA	1		
5	Tree Protection	LS	1		
6	Construction Fencing	LF	2200		
7	Removal of Existing Planter Wall	LS	1		
8	Removal of Existing Signage and Metal Bollards	LS	1		
B - UTILITIES					
1	Domestic Water Service to Building	LS	1		
2	Domestic Water Service tie-in to street	EA	1		
3	Sewer line connection	Allow	1		
4	Drinking Fountain hookups	EA	2		
5	Storm Drainage Infrastructure	LS	1		
C - HARDSCAPE					
1	Asphalt Pavement for Parking Lot with Aggregate Base	SF	19,510		
2	GraniteCrete Pathway (w/ Aggregate Base)	SF	6386		
3	Concrete Seatwalls (at Entry Plaza)	LF	20		
4	Colored Concrete Retaining Walls (at Amphitheater)	LF	130		
5	Concrete Pavement (w/ Aggregate Base)	SF	12,250		
6	Concrete Pavement - Vehicular (w/ Aggregate Base)	SF	2,400		
7	Colored Concrete Pavement (aggregate Base)	SF	7,120		
8	Colored Concrete Pavement - Vehicular (w/ Aggregate Base)	SF	620		
9	Concrete Playground Edge	LF	500		
10	Ornamental Metal Fence-60" ht	LF	297		
11	Ornamental Metal Fence-48" ht	LF	626		
12	Ornamental Pedestrian Gates-60	EA	1		
13	Ornamental Vehicular Gates-60"	EA	1		
14	12" Concrete Mow Band	LF	1197		
15	18" Concrete Mow Band under Fence (along Watt Ave)	LF	294		
16	Parking Lot Striping	LS	1		
17	Concrete Wheel Stop	EA	48		
18	Gravel Service Drive (at Garden)	SF	510		
19	ADA Curb Ramp with Truncated Domes (CalTrans Case C)	EA	2		
20	Vertical curb / Retaining wall	LF	66		

Item No.	Item	Unit of measure	Estimated quantity	Unit price (in figures)	Item total (in figures)
21	Culvert Feature	LF	40		
22	Prop 68 Signage	EA	1		
23	6"Curb with Handrail	LF	30		
24	6" vertical curb	LF	1211		
D – FURNISHINGS / EQUIPMENT / STRUCTURES					
1	Bench - Backed - Outdoor Creations	EA	7		
2	Bench - Backless - Outdoor Creations	EA	6		
3	Trash and Recycling Receptacles	EA	10		
4	Picnic Table - (Accessible) - Outdoor Creations	EA	3		
5	Picnic Table - (Standard) - Outdoor Creations	EA	10		
6	Round Picnic Table - ADA	EA	1		
7	Round Picnic Table	EA	1		
8	Park Sign - Outdoor Creations	EA	1		
9	Barbecue Grill - Single - Dumor	EA	1		
10	Barbecue Grill - Group - Dumor	EA	1		
11	Bike Racks - Hoop - Dumor	EA	4		
12	Bike Lockers - Ground Control Systems	EA	2		
13	Pet Waste Station	EA	1		
14	Drinking Fountain w/Dog Bowl and Bottle Filler	EA	2		
15	Removable Bollards - Dumor	EA	3		
16	Interpretive Signage	EA	3		
17	ADA Parking Sign	EA	2		
E – PLAYGROUND AND FITNESS					
1	Play Equipment (including Tax and Freight), Foundation Design (Deferred Submittal to the County), and Installation.	LS	1		
2	P.I.P Safety Surfacing (at Playground ADA path & Fitness) with Aggregate Base	SF	3990		
3	P.I.P Safety Surfacing (at Playground Hill) over Conc Base	SF	320		
4	EWF Safety Surfacing (at Playground)	SF	5103		
5	Fitness Equipment incl. tax, freight and installation	LS	1		
F - STRUCTURES					
1	Base Preparation for Pre-Fab Restroom Building and Utility Connections	LS	1		
2	Pedestrian Bridge (including Tax and Freight), Abutment Foundation Design (Deferred Submittal to the County), and Installation	LS	1		
3	Shade Structures including Installation	LS	1		
4	Pilaster (at Ornamental Fence)	EA	12		
G – ELECTRICAL POWER, LIGHTING, EV					

Item No.	Item	Unit of measure	Estimated quantity	Unit price (in figures)	Item total (in figures)
1	Electrical service 400A, 120/208V, 3phase, 4 wire w/transformer pad	LS	1		
2	Service to Building	LS	1		
3	Service to amphitheater	LS	1		
4	Service to gardens	LS	1		
5	Parking Lot Lighting	EA	9		
6	Pathway lighting	EA	13		
7	EV Charging stations and infrastructure	EA	2		
8	EV Infrastructure for Future	LS	1		
H - PLANTING					
1	Soil Preparation including amendments	SF	82,034		
2	Sod Turf Lawn	SF	33,984		
3	Hydroseed Meadow Mix	SF	98,655		
4	Trees - 15 Gal from SacTree	EA	147		
5	Specimen Trees - 36" Box	EA	2		
6	Root Barriers	EA	110		
7	Bark Mulch	SF	10,650		
8	Bark Mulch in Planting Areas	SF	48,050		
9	Shrubs - 1 gal	EA	2,950		
10	Shrubs - 5 gal	EA	265		
11	Shrubs - 15 gal	EA	68		
I - IRRIGATION					
1	Irrigation system	SF	82,034		
2	Mainline Connection to Existing Water Meter	LS	1		
3	Revisions to Existing Irrigation System	Allow	1		
J - MISCELLANEOUS					
1	Maintenance (90 Day)	SF	82,034		
2	Mobilization/De-mobilization (NTE - 5%)	LS	1		
		BASE BID, ON-SITE ONLY			

NOTE: "TOTAL BASE BID" IS INCLDED ON THE NEXT PAGE.

BID SCHEDULE (OFF-SITE WORK)

Item No.	Item	Unit of measure	Estimated quantity	Unit price (in figures)	Item total (in figures)
A - SITE PREPARATION					
1	Mobilization	LS	1		
2	Temporary Erosion Control / SWPPP Protection	AC	0.12		
B – STREET WORK					
1	Sawcut Ex Pavement	LF	1,130		
2	Demo Ex Pavement / Median	SF	5,160		
3	Type 4 Median Curb	LF	960		
4	AC/AB Pavement	SF	4,100		
5	Sidewalk	SF	1,410		
6	Type 1A Curb	LS	105		
7	45' Driveway	LS	2		
8	Signage	LS	1		
C – TRAFFIC SIGNAL					
1	Traffic Signal Modification	LS	1		
2	Striping and Pavement Marking	LS			
3	Type H Marker	EA	42		
D - PLANTING					
1	Soil Preparation including Amendments	SF	2800		
2	Trees - 15 Gal from SacTree	EA	4		
3	Root Barriers	EA	8		
4	Bark Mulch in New Median	SF	2750		
5	Shrub Areas - 1 gal	EA	16		
E - IRRIGATION					
1	Irrigation system	SF	600		
F - MISCELLANEOUS					
1	Maintenance (30 Day)	SF	2800		
2	Mobilization/De-mobilization (NTE - 5%)	LS	1		
		BASE BID, OFF-SITE ONLY			

ADD TOTAL BASE BID _____

Bidders shall submit prices for both the On-Site Work and the Off-Site Work. The Total Base Bid shall be the sum of the On-Site Only and Off-Site Only Base Bids (See Section 1.3 and 1.4 of the Bidding Requirements). Award, if made, will be made to the lowest responsive responsible bidder based on the Total Base Bid. The Contract Price shall include both the On-Site Work and the Off-Site Work.

Acknowledge Addenda for On-site and Off-site Work.

Addendum #:_____ Signed: _____

Addendum #:_____ Signed: _____

Addendum #:_____ Signed: _____

Addendum #:_____ Signed: _____

1.4 DESIGNATION OF SUBCONTRACTORS

In compliance with Public Contract Code section 4100 et seq. each bidder shall set forth below the: (a) name, location of the mill, shop, or office, and California contractor's license number of each subcontractor who will perform work or labor or render service to the Contractor in or about the construction of the work or improvement to be performed under these specifications in excess of one-half of 1% of the Contractor's total bid, (b) description of the type of work to be performed by each such subcontractor, and (c) portion of the work (expressed in dollar amount) that will be performed by each such subcontractor.

If the Contractor fails to specify a subcontractor for any portion of the work to be performed under the Contract, it shall be deemed to have agreed to perform such portion itself, and it shall not be permitted to subcontract that portion of the work except under the conditions hereinafter set forth.

Subletting or subcontracting of any portion of the work in excess of one-half of 1% of the Contractor's total bid as to which no subcontractor was designated in the original bid shall only be permitted in cases of public emergency or necessity, and then only after a making a written finding as a public record of the District setting forth the facts constituting the emergency or necessity.

Subcontractor (name, address, Subcontractor's CSLB License Number, Subcontractor's DIR Public Works Contractor Registration Number)	Description of Subcontractor Work	Portion of Work ($)

Subcontractor (name, address, Subcontractor's CSLB License Number, Subcontractor's DIR Public Works Contractor Registration Number)	Description of Subcontractor Work	Portion of Work ($)

Subcontractor (name, address, Subcontractor's CSLB License Number, Subcontractor's DIR Public Works Contractor Registration Number)	Description of Subcontractor Work	Portion of Work ($)

Additional pages attached: _____

1.5 BID BOND

KNOW ALL MEN BY THESE PRESENTS, THAT WE, THE UNDERSIGNED _____, Contractor as Principal; and _____, as Surety, are hereby held and bound unto North Highlands Recreation and Park District, hereinafter called the District, in the sum of $_____, which sum is equal to at least ten percent of the total amount of the Bid, payment of which sum, well and truly to be made, we hereby jointly and severally bind ourselves, our heirs, executors, administrators, successors, and assigns.

The condition of the above obligation is such that whereas the Principal has submitted to the District a certain Bid, attached hereto and hereby made a part hereof, to enter into a Contract in writing, for the construction of the following public works project:

> Sierra Creek Community Park (Park Site) - Scope of work including but not limited to: construction of a new community park with play equipment, shade shelters, picnic areas with picnic tables and BBQs, a parking lot with electric vehicle charging stations, a space for a community garden, fencing, planting and irrigation, restroom building, power and lighting, and pedestrian bridge over the existing Sierra Creek in the park.
>
> Watt Avenue Street Improvements (Off-Site)- Scope of work for off-site improvements includes but not limited to: Construction of U-Turn Lane, asphalt pavement, curbs, gutters and sidewalks, driveways and median improvements including landscape, traffic signal modification, and striping.

NOW, THEREFORE,

(a) If the Bid is rejected, or in the alternate,

(b) If the Bid is accepted and the Principal shall sign and deliver a Contract, in the form of the Contract attached hereto and shall execute and deliver Performance and Payment Bonds in the forms attached hereto and shall deliver proof of insurance (all completed in accordance with the Contract Documents), and shall in all other respects perform the agreement created by the acceptance of the Bid;

Then, this obligation shall be void, otherwise the same shall remain in force and effect; it being expressly understood and agreed that the liability of the Surety for any and all default of the Principal hereunder shall be the amount of this obligation as herein stated.

The Surety, for value received, hereby stipulates and agrees that the obligations of said Surety and its bond shall be in no way impaired or affected by any extension of the time within which the District may accept such Bid, and said Surety does hereby waive notice of any such extension.

IN WITNESS THEREOF, the above bounded parties have executed this instrument under their several seals this _____ day of _____, the name and corporate seal of each corporate party being hereto affixed and those presents duly signed by its undersigned representative, pursuant to authority of its governing body.

For Contractor as Principal:

_____

Name: _____

Title: _____

For Surety:

_____

Name: _____

Title: _____

(Seal)

1.6 EXPERIENCE QUALIFICATIONS

The Bidder has been engaged in the contracting business, under the present business name for ___years. Experience in work of a nature similar to that covered in the Bid extends over a period of _____ years.

The Bidder, as a contractor, has never failed to satisfactorily complete a contract awarded to it, except as follows:

_____

_____

_____

_____

The following contracts have been satisfactorily completed in the last three years for the persons, firm or entity indicated:

Year	Owner	Type of Work	Contract Amount

The following is a list of plant and equipment owned by the Bidder, which is definitely available for use on the proposed work as required.

Quantity	Name, Type, and Capacity	Condition	Location

Executed on _____, at _____, _____

BIDDER

Company Name: _____

Authorized Signature: _____

Printed Name: _____

Title: _____

1.7 NONCOLLUSION DECLARATION TO BE EXECUTED BY BIDDER AND SUBMITTED WITH BID (PUBLIC CONTRACT CODE SECTION 7106)

The undersigned declares:

I am the _____ (Title) of _____ (Bidder), the party making the foregoing bid.

The bid is not made in the interest of, or on behalf of, any undisclosed person, partnership, company, association, organization, or corporation. The bid is genuine and not collusive or sham. The bidder has not directly or indirectly induced or solicited any other bidder to put in a false or sham bid. The bidder has not directly or indirectly colluded, conspired, connived, or agreed with any bidder or anyone else to put in a sham bid, or to refrain from bidding. The bidder has not in any manner, directly or indirectly, sought by agreement, communication, or conference with anyone to fix the bid price of the bidder or any other bidder, or to fix any overhead, profit, or cost element of the bid price, or of that of any other bidder. All statements contained in the bid are true. The bidder has not, directly or indirectly, submitted his or her bid price or any breakdown thereof, or the contents thereof, or divulged information or data relative thereto, to any corporation, partnership, company, association, organization, bid depository, or to any member or agent thereof, to effectuate a collusive or sham bid, and has not paid, and will not pay, any person or entity for such purpose.

Any person executing this declaration on behalf of a bidder that is a corporation, partnership, joint venture, limited liability company, limited liability partnership, or any other entity, hereby represents that he or she has full power to execute, and does execute, this declaration on behalf of the bidder.

I declare under penalty of perjury under the laws of the State of California that the foregoing is true and correct and that this declaration is executed on _____ _____, at _____, _____.

Authorized Signature: _____

Printed Name: _____

1.8 ACKNOWLEDGMENT OF INSURANCE AND BONDING REQUIREMENTS

By signing below Bidder acknowledges the insurance requirements as listed in the General Conditions, section 5.58 "Insurance." By this acknowledgment, the Bidder and its insurance provider(s) and surety(ies) certify that they have read and understand the insurance and bonding requirements in their entirety, including limits of coverage, additional insureds and endorsements, and bonding requirements, and that the Bidder can provide the insurance coverage and bonds as required in the Contract documents without exception.

Bidder understands that if the insurance coverage provided in section 5.58 of the General Conditions and the Contract Bonds cannot be provided, its bid is subject to rejection by the District as non-responsive.

BIDDER

Company Name: _____

Authorized Signature: _____

Printed Name: _____

Title: _____

Date: _____

SURETY PROVIDER/ SURETY REPRESENTATIVE

Surety Name: _____

Authorized Signature: _____

Printed Name: _____

Title: _____

Date: _____

INSURANCE PROVIDER/ INSURANCE REPRESENTATIVE

Insurer Name: _____

Authorized Signature: _____

Printed Name: _____

Title: _____

Date: _____

Bidder Must Provide This Acknowledgment for Each Insurer or Surety Providing Insurance Coverage or a Bond under this Contract

1.9 IRAN CONTRACTING ACT CERTIFICATION

Pursuant to Public Contract Code (PCC) section 2204, the following Iran Contracting Act certification is required if your bid totals $1,000,000 or more.

If your bid totals $1,000,000 or more, you must complete only one of the following two paragraphs. To complete paragraph 1, check the corresponding box and complete the certification. To complete paragraph 2, simply check the corresponding box.

☐ 1. We are not on the current list of persons engaged in investment activities in Iran created by the California Department of General Services (DGS) pursuant to PCC 2203(b), and we are not a financial institution extending twenty million dollars ($20,000,000) or more in credit to another person, for 45 days or more, if that other person will use the credit to provide goods or services in the energy sector in Iran and is identified on the current list of persons engaged in investment activities in Iran created by DGS.

I declare under penalty of perjury under the laws of the State of California that the foregoing is true and correct and that this declaration is executed on

_____ (date),

at _____ (city), _____ (state).

_____(signature)

_____(printed name)

OR

☐ 2. We have received written permission from the District to submit a bid pursuant to PCC 2203(c) or (d). A copy of the written permission from the District is included with our bid.

2 CONTRACT FORMS

2.1 CONTRACT

THIS CONTRACT is made as of [date], in Sacramento, California, by and between North Highlands Recreation and Park District, a public agency, ("District") and [name of contractor], a [insert capacity of Contractor, e.g., a California corporation, partnership or a sole proprietorship] ("Contractor"), who agree as follows:

2.1.1 The Contractor agrees to furnish all labor, materials, supplies, tools, and equipment and to perform all the work required to construct and complete in a good and workmanlike manner, and in strict accordance with the Contract Documents, those certain improvements entitled:

> Sierra Creek Community Park (Park Site)- Scope of work including but not limited to: construction of a new community park with play equipment, picnic areas with shade structures, picnic tables and BBQs, a parking lot with electric vehicle charging stations, a space for a community garden, fencing, planting and irrigation, restroom building, power and lighting, and new pedestrian bridge over the existing Sierra Creek in the park.
>
> Watt Avenue Street Improvements (Off-Site)- Scope of work for off-site improvements includes but not limited to: Construction of U-Turn Lane, asphalt pavement, curbs, gutters and sidewalks, driveways and median improvements including landscape, traffic signal modification, and striping.

2.1.2 Contract Documents for this project have been prepared by Westwood Professional Services, hereinafter called the Engineer. All Contract Documents, and each and every provision thereof, relating to this Contract are hereby made a part of and incorporated by reference into this Contract. The following are the applicable Contract Documents: Invitation to Bid, Bid, Bid Bond, Designation of Subcontractors, Experience Qualifications, Noncollusion Declaration, Acknowledgment of Insurance Requirements, Instructions to Bidders, Contract, Faithful Performance Bond, Payment Bond, Contractor's Certificate Regarding Workers' Compensation, the Insurance Certificates and Endorsements, Abbreviations and Definitions, General Conditions, Technical Specifications and Plans (Drawings), applicable to this work, and all Addenda and Change Orders, as well as all written modifications of the Contract Documents agreed to by the parties. Any work called for in one Contract Document and not mentioned in others is to be performed and executed as if mentioned in all Contract Documents.

2.1.3 The District agrees to pay the Contractor for the performance of the Contract, subject to additions and deductions provided therein, the following prices, and the Contractor agrees to receive and accept the following prices as full compensation for furnishing all materials, labor, supplies, tools and equipment, and for doing all the work contemplated and embraced in this Contract, and for all risks of every description connected with the work and for all expenses incurred by or in consequence of the suspension or discontinuance of the work, and

for well and faithfully completing the work and the whole thereof in the manner and according to the Contract Documents and the requirements of the Engineer under them, namely:

[bid items and prices to be listed here]

2.1.4 The District shall make payments on the account of the Contract as specified in the General Conditions of the Contract.

2.1.5 The Contractor shall diligently prosecute the work to completion in accordance with the following schedule: Work on the total project shall be completed within Three hundred and thirty (330) calendar days from the date of the Notice to Proceed.

2.1.6 The Contractor acknowledges that it has examined the prevailing rate of per diem wages as established and published by the California Director of Industrial Relations, copies of which are available for inspection at the office of the District. The Contractor agrees to pay all workers employed on the work not less than the applicable prevailing rate of per diem wages, as the same may be amended from time to time. The Contractor shall post at each job site a copy of the determination of the Director of Industrial Relations of the prevailing rate of per diem wages. The Contractor also shall ensure that all subcontractors on the work are notified of and comply with their obligations in regard to the payment of prevailing wages to all of their workers employed on the Project.

IN WITNESS WHEREOF, the parties execute this Contract as follows:

For District:

_____

Name: _____

Title: Chairperson, Board of Directors

Attest:

_____

Name: Scott Graham

Title: District Administrator

For Contractor:

_____

Name: _____

Title: _____

2.2 FAITHFUL PERFORMANCE BOND

KNOW ALL MEN BY THESE PRESENTS,

THAT, WHEREAS, North Highlands Recreation and Park District, hereinafter designated as the "District," entered into a Contract with _____, hereinafter designated as the "Contractor" for the work described as follows:

> Sierra Creek Community Park - Scope of work including but not limited to: construction of a new community park with play equipment, picnic areas with shade structures, picnic tables and BBQs, a parking lot with electric vehicle charging stations, a space for a community garden, fencing, planting and irrigation, restroom building, power and lighting, and new pedestrian bridge over the existing Sierra Creek in the park.
>
> Watt Avenue Street Improvements (Off-Site)- Scope of work for off-site improvements includes, but not limited to: Construction of U-Turn Lane, asphalt pavement, curbs, gutters and sidewalks, driveways and median improvements including landscape, traffic signal modification and striping.

WHEREAS, the Contractor is required under terms of the Contract to furnish a bond for the faithful performance of the Contract;

WHEREAS, the Contract is by reference made a part hereof;

NOW, THEREFORE, we, the undersigned Contractor, as Principal, and _____, a corporation organized and existing under the laws of the State of _____, and duly authorized and in good standing to transact business under the laws of the State of California, as an admitted Surety, are held and firmly bound unto the District in the penal sum of $_____, the sum being not less than one hundred percent (100%) of the total Contract amount, for the payment of which sum well and truly to be made, we bind ourselves, our heirs, executors, administrators, and successors, jointly and severally, firmly by these presents.

THE CONDITION OF THIS OBLIGATION IS SUCH, THAT, if the above bounden Contractor, its heirs, executors, administrators, successors or assigns, shall in all things stand to and abide by, and well and truly keep and perform the covenants, conditions, and agreements in the Contract and any alterations thereof made as therein provided, on its part, to be kept and performed at the time and in the manner therein specified, and in all respects according to their true intent and meaning, and shall indemnify and save harmless the District, its directors, officers, employees and agents, as therein stipulated, then this obligation shall become null and void; otherwise it shall be and remain in full force and effect.

As a condition precedent to the satisfactory completion of the said Contract, the above obligation in above-stated amount shall hold good for a period of one (1) year after the recording

of the notice of completion, during which time if the Contractor, its heirs, executors, administrators, successors or assigns shall fail to make full, complete, and satisfactory repair and replacements or totally protect the District from loss or damage made evident during the period of one (1) year from the date of recording of the notice of completion, and resulting from or caused by defective materials or faulty workmanship in the prosecution of the work done, the above obligation in the above-stated amount shall remain in full force and effect. However, anything in this paragraph to the contrary notwithstanding, the obligation of the Surety hereunder shall continue so long as any obligation of the Contractor remains.

The Surety, for value received, hereby stipulates and agrees that no change, extension of time, alteration or addition to the terms of the Contract or to the work to be performed thereunder or the specifications accompanying the same shall, in any way, affect its obligations on this bond and it does hereby waive notice of any such change, extension of time, alteration, or addition to the terms of the Contract or to the work or to the specifications. The Surety hereby waives the provisions of Sections 2819 and 2845 of the Civil Code of the State of California.

In the event suit is brought upon this bond by the District and judgment is recovered, the Surety shall pay all costs incurred by the District in such suit, including, but not limited to, administrative and consultant costs, and reasonable attorneys' fees to be fixed by the Court.

The address or addresses at which the principal and surety(ies) may be served with notices, papers and other documents under the California Bond and Undertaking Law (Code of Civil Procedure section 995.010 et seq.) is the following:

_____

_____

IN WITNESS THEREOF, the above bounded parties have executed this instrument under their several seals this _____ day of _____, the name and corporate seal of each corporate party being hereto affixed and those presents duly signed by its undersigned representative, pursuant to authority of its governing body.

For Contractor as Principal:

_____

Name: _____

Title: _____

For Surety:

_____

Name: _____

Title: _____

(Seal)

(NOTE: The date of this bond must not be prior to date of Contract. If Contractor is a partnership, all partners should execute bond.)

2.3 PAYMENT BOND

KNOW ALL MEN BY THESE PRESENTS,

THAT, WHEREAS, the North Highlands Recreation and Park District, hereinafter designated as the "District," has awarded to _____ hereinafter designated as the "Contractor" a Contract for the work described as follows:

> Sierra Creek Community Park - Scope of work including but not limited to: construction of a new community park with play equipment, shade shelters, picnic areas picnic tables and BBQs, a parking lot with electric vehicle charging stations, a space for a community garden, fencing, planting and irrigation, restroom building, power and lighting, and new pedestrian bridge over the existing Sierra Creek in the park.
>
> Watt Avenue Street Improvements (Off- Site)- Scope of work for off-site improvements includes but not limited to: Construction of U-Turn Lane, asphalt pavement, curbs, gutters and sidewalks, driveways and median improvements including landscape, traffic signal modification and striping.

WHEREAS, the Contractor is required by the Contract and by the provisions of Division 4, Part 6 of the Civil Code to furnish a bond in connection with the Contract, as hereinafter set forth.

WHEREAS, the Contract by this reference is made a part hereof;

NOW, THEREFORE, we, the undersigned Contractor, as Principal, and _____ _____, as Surety, a corporation organized and existing under the laws of the State of _____, duly authorized and in good standing to transact business under the laws of the State of California, as an admitted Surety, are held and firmly bound unto the District in the sum of $ _____, the sum being not less than one hundred percent (100%) of the total Contract amount payable by the District, under the terms of the Contract, for which payment well and truly to be made, we bind ourselves, our heirs, executors and administrators, successors and assigns, jointly and severally, firmly by these presents.

THE CONDITION OF THIS OBLIGATION IS SUCH, THAT, if the Contractor, its heirs, executors, administrators, successors, assigns or subcontractors shall fail to pay for any materials, provisions, provender or other supplies or teams, implements or machinery used in, upon, for or about the performance of the work contracted to be done, or shall fail to pay for any work or labor thereon of any kind, or shall fail to pay any of the persons named in Civil Code Section 9100, or shall fail to pay for amounts due under the Unemployment Insurance Code with respect to such work or labor as required by the provisions of Division 4, Part 6 of the Civil Code, or shall fail to pay for any amounts required to be deducted, withheld, and paid over to the Employment Development Department from the wages of employees of the Contractor and subcontractors

pursuant to Section 13020 of the Unemployment Insurance Code with respect to such work or labor, and provided that the claimant shall have complied with the provisions of that Code, the Surety or Sureties hereon will pay for the same in amount not exceeding the sum specified in the Contract, otherwise the above obligation shall be void. In case suit is brought upon this bond, the Surety will pay a reasonable attorney's fee to the prevailing party to be fixed by the court. This bond shall inure to the benefit of any and all persons, companies and corporations entitled to file claims under Section 9100 of the Civil Code, so as to give a right of action to them or to their assigns in any suit brought upon this bond. And the Surety, for value received, hereby stipulates and agrees that no change, extension of time, alteration or addition to the terms of the Contract or to the work to be performed thereunder or the specifications accompanying the same shall in any way affect its obligation on this bond, and it does hereby waive notice of any such change, extension of time, alteration or addition to the terms of the Contract or to the work or to the specifications.

The address or addresses at which the principal and surety(ies) may be served with notices, papers and other documents under the California Bond and Undertaking Law (Code of Civil Procedure section 995.010 et seq.) is the following:

_____

_____

IN WITNESS THEREOF, the above bounded parties have executed this instrument under their several seals this _____ day of _____, the name and corporate seal of each corporate party being hereto affixed and those presents duly signed by its undersigned representative, pursuant to authority of its governing body.

For Contractor as Principal:

_____

Name: _____

Title: _____

For Surety:

_____

Name: _____

Title: _____

(Seal)

(NOTE: The date of this bond must not be prior to date of Contract. If Contractor is a partnership, all partners should execute bond.)

2.4 CONTRACTOR'S WORKERS' COMPENSATION CERTIFICATE (LABOR CODE SECTION 1861)

To: North Highlands Recreation and Park District

I am aware of the provisions of Section 3700 of the Labor Code, which require every employer to be insured against liability for workers' compensation or to undertake self-insurance in accordance with the provisions of that code, and I will comply with such provisions before commencing the performance of the work under this Contract.

BIDDER

Company Name: _____

Authorized Signature: _____

Printed Name: _____

Title: _____

Date: _____

3 ABBREVIATIONS AND DEFINITIONS

3.1 ABBREVIATIONS

The following abbreviations may be used in the Contract Documents:

AA	Aluminum Association
AASHO	American Association of State Highway Officials
ABMA	American Boiler Manufacturer's Association
ACI	The American Concrete Institute
AGA	American Gas Association
AGC	Associated General Contractors
AGMA	American Gear Manufacturer's Association
AI	The Asphalt Institute
AIA	American Institute of Architects
AISC	American Institute of Steel Construction
AISI	American Iron and Steel Institute
ANSI	American National Standards Institute, Inc.
API	American Petroleum Institute
APWA	American Public Works Association
AREA	American Railway Engineering Association
ASCE	American Society of Civil Engineers
ASME	American Society of Mechanical Engineers
ASTM	American Society for Testing and Materials
AWPA	American Wood Preservers' Association
AWS	American Welding Society
AWWA	American Water Works Association
BGHMA	Builders Hardware Manufacturers Association

CCMTC	California Concrete Masonry Technical Committee
CRSI	Concrete Reinforcement Steel Institute
DFPA	Douglas Fir Plywood Association
ETL	Electrical Testing Laboratory
FS	Federal Specification
ICBO	International Conference of Building Officials
IEEE	The Institute of Electrical and Electronics Engineers
IES	Illuminating Engineering Society
IPCEA	Insulated Power Cable Engineers Association
MBMA	Metal Building Manufacturer's Association
MSS	Manufacturers Standardization Society of Valve and Fitting Industry Standards
NBFU	National Board of Fire Underwriters
NBS	National Building Standards
NEC	National Electrical Code
NEMA	National Electrical Manufacturers Association
NFPA	National Fire Protection Association
OSHA	Occupational Safety and Health Act of 1970
PCA	Portland Cement Association
SMACNA	Sheet Metal and Air Conditioning Contractor's National Association
SSPC	Steel Structures Painting Council
SSPWC	Standard Specifications for Public Works Construction
UBC	Uniform Building Code
UHPHS	United States Public Health Service
UL	Underwriter's Laboratory
UMC	Uniform Mechanical Code

UPC	Uniform Plumbing Code
USAS	The United States of America Standard Institute
USBR	United States Bureau of Reclamation
WCLIB	West Coast Lumber Inspection Bureau
WIC	Woodwork Institute of California

3.2 DEFINITIONS

For purposes of the Contract Documents, these words and phrases shall be defined as follows:

3.2.1 District means the North Highlands Recreation and Park District, also referred to as the Owner.

3.2.2 As Approved shall be understood to be followed by the words "by the Engineer," unless otherwise qualified.

3.2.3 As Shown and As Indicated shall be understood to be followed by the words "on the Plans."

3.2.4 Bid means the offer of the bidder for the work when made out and submitted on the prescribed bid form, properly completed, signed and guaranteed.

3.2.5 Bid Bond means the cash, cashier's check, certified check, or bidder's bond accompanying the bid submitted by the bidder, as a guarantee that the bidder will enter into a Contract with the District for the performance of work herein described.

3.2.6 Bidder means any individual, firm, partnership or corporation submitting a bid for the work contemplated, and acting directly or through a duly authorized representative.

3.2.7 Board of Directors or Board means the Board of Directors of the District.

3.2.8 Contract means the written agreement covering the performance of the work and the furnishing of labor, materials, tools and equipment in the construction of the work. The Contract shall include all Contract Documents and supplemental agreements amending or extending the work contemplated which may be required to complete the work in a substantial and acceptable manner. Supplemental agreements are written agreements covering alterations, amendments or extensions to the Contract, and include Addenda and Contract Change Orders.

3.2.9 Contract Documents means any or all of the documents listed in section 2.1.2 of the Contract.

3.2.10 Contractor means the person or persons, firm, partnership or corporation or other entity who has entered into the Contract with the District to perform the work.

3.2.11 County means County of Sacramento, California.

3.2.12 Date of the Contract means the date on which the Contract is signed by the District's authorized representative.

3.2.13 Days mean calendar days unless otherwise designated.

3.2.14 Engineer means the architect or engineer retained by the District, or the person designated as the District Representative in the Invitation to Bid. The Engineer and the District Representative are authorized to act on behalf of the District, either directly or through properly authorized agents acting within the scope of their delegated duties.

3.2.15 Force Majeure Event means any event that materially affects a party's performance and is one or more of the following: (1) acts of god or other natural disasters; (2) terrorism or other acts of a public enemy; (3) orders of governmental authorities (including, without limitation, unreasonable and unforeseeable delay in the issuance of permits or approvals by governmental authorities that are required for the Work); (4) pandemics, epidemics or quarantine restrictions; (5) strikes and other organized labor action occurring at the project site and the effects thereof on the Work, but only to the extent that such strikes and other organized labor action and the effects thereof cannot be avoided by the use of replacement workers. A claim of a Force Majeure Event will only apply to the extent that the event and effects thereof occur because of factors that could not be planned for or mitigated and are beyond the control of Contractor and its subcontractors of every tier.

3.2.16 He shall include "she" and "it" and his shall include "her" and "its."

3.2.17 Or Equal means the term "or equal" shall be understood to indicate that the "equal" product be the same or better than the product named in function, performance, reliability, quality, and general configuration. Determination of equality in reference to the project design requirements will be made by the Engineer.

3.2.18 Plans or Drawings mean the term "Plans" or "Drawings" refers to the official plans, drawings, profiles, cross sections, elevations, details, and other working drawings and supplementary drawings, or reproductions thereof, signed by the Engineer, which show the location, character, dimensions, and details of the work to be performed, and identified at section 2.1.2. Plans may either be bound in the same book as the balance of the Contract Documents or bound in separate sets, and are a part of the Contract Documents, regardless of the method of binding.

3.2.19 Specifications mean the terms, provisions, and requirements contained in the Contract Documents and identified in section 2.1.2 and is synonymous with "Technical Specifications." Where standard specifications, such as those of "ASTM", "AASHO", etc. have been referred to, the applicable portions of such standard specifications shall become a part of these Contract Documents.

3.2.20 State means State of California.

3.2.21 State Standard Specifications mean the edition in effect as of the Date of Execution of the Contract of the Standard Specifications issued by the State of California Business and Transportation Agency, Department of Transportation, unless a specific edition is referenced.

3.2.22 Subcontractor means only those persons, firms or entities having a direct contract with the Contractor, and it includes one who furnishes material worked to a special design according to the Plans or Specifications of this work, but does not include one who merely furnishes material not so worked and would be considered a supplier only.

3.2.23 Supply Shortage means a shortage in materials that is (a) supported by documented proof that Contractor made every effort to obtain such materials from all available sources; (b) such shortage is due to the fact that such materials are not physically available from single or multiple sources, could have been obtained only at exorbitant prices entirely inconsistent with current and standard rates taking into account the quantities involved and the usual industry practices in obtaining such quantities, or such materials require a significant lead time to fabricate; and (c) such shortages and the difficulties in obtaining alternate sources of materials could not have been known or anticipated by Contractor at the time it submitted its bid or entered the Contract. Market fluctuations in prices of materials, whether or not resulting from a Force Majeure Event, do not constitute a Supply Shortage.

3.2.24 Time Limits mean all time limits stated in the Contract Documents are of the essence of the Contract.

3.2.25 Work means all the work specified, indicated, shown or contemplated in the Contract Documents to construct the improvements, including all alterations, amendments or extensions thereto made by Contract Change Order or other written orders of the Engineer.

3.2.26 Whenever in the Contract Documents or upon the Drawings the words DIRECTED, REQUIRED, PERMITTED, ORDERED, DESIGNATED, PRESCRIBED, or words of like import are used, it shall be understood that the direction, requirement, permission, order, designation or prescription of the Engineer is intended, and similarly the words APPROVED, ACCEPTABLE, SATISFACTORY, or words of like import, shall mean approved or acceptable to, or satisfactory to the Engineer, unless otherwise expressly stated.

4 INSTRUCTIONS TO BIDDERS

4.1 INTRODUCTION

Each bid shall be in accordance with these Instructions to Bidders and other applicable provisions of the Contract Documents. The Invitation to Bid will specify whether Contract Documents are available on a purchase or deposit basis. Where payment for such sets is specified, no refund will be made.

4.2 PLANS

Additional copies of full-scale plans or individual plan sheets may be obtained at the office of the Engineer for the cost of reproduction.

4.3 LOCAL CONDITIONS

4.3.1 The quantities of work or material stated in the unit price items of the Bid Schedule are given only as a basis for the comparison of Bids, and the District does not represent or warrant that the actual amount of work or material will correspond therewith, but reserves the right to increase or decrease the quantity of any unit price item of the work as may be deemed necessary or expedient by the Engineer.

4.3.2 The Bidder shall examine carefully the site of the work contemplated and the Contract Documents. The submission of a Bid shall be conclusive evidence that the Bidder has investigated and is satisfied as to the conditions to be encountered, as to the character, quality and quantities of work to be performed and the materials to be furnished, and as to the requirements of the Contract Documents. Bidders shall thoroughly examine and be familiar with the Plans and Specifications. The failure of any bidder to receive or examine any form, instrument, addendum or other document, or to visit the site and acquaint himself with conditions there existing shall in no way relieve the Bidder from any obligation with respect to its proposal or to the Contract. The Plans for the work show conditions as they are supposed or believed by the District, the Engineer or their representatives to exist; but it is neither intended nor to be inferred that the conditions as shown thereon constitute a representation by the District, the Engineer, or their representatives that such conditions are actually existent, nor shall the District, the Engineer or their representatives be liable for any loss sustained by the Contractor as a result of any inference or extrapolation drawn by the Bidder between conditions as shown on the Plans and the actual conditions revealed during the progress of work, or otherwise. The Bidder's attention is directed to the possible existence of obstructions and public or private improvements which may be within the limits of the work or adjacent thereto, which may or may not be shown on the Plans.

4.3.3 Where the Engineer has made investigations of surface and subsurface conditions in areas where work is to be performed under the Contract, or in other areas, some of which may constitute possible local material sources, such investigations were made only for the purpose of study and design. Where such investigations have been made, bidders or Contractor may, upon written request, inspect the records of the Engineer as to such investigations subject to and upon the conditions hereinafter set forth. Such inspection of records may be made at the office of the Engineer.

4.3.4 The records of such investigations are not a part of the Contract and are made available for inspection solely for the convenience of the bidder or Contractor. It is expressly understood and agreed by bidder or Contractor that neither the District nor the Engineer assumes any responsibility whatsoever with respect to the sufficiency or accuracy of the investigations thus made, the records thereof, or of the interpretation set forth therein or made by the Engineer in his use thereof and there is no representation, warranty or guarantee, either express or implied, that the conditions indicated by such investigations or records thereof are correct or representative of those existing throughout such areas or any part thereof, or that unanticipated developments may not occur or that materials other than, or in proportions different from, those indicated may not be encountered.

4.3.5 Where a log of test borings or other investigations of subsurface conditions have been made by the District in respect to foundation or other structural design, and that information is shown in the plans, said information represents only the statement by the District as to the character of material which has been actually encountered by it in its investigation, and is only included for the convenience of bidders. Water levels that may be shown on a log of test borings are valid only for the stated date of observation. The water level may change from season to season and from year to year. Investigations of subsurface conditions are made for the purpose of design, and the District assumes no responsibility whatever in respect to the sufficiency or accuracy of borings or of the log of test borings or other preliminary investigations, or of the interpretation thereof, and there is no guaranty, either expressed or implied, that the conditions indicated are representative of those existing throughout the work, or any part of it, or that unobserved or unanticipated developments may not occur. Making such information available to bidders is not to be construed in any way as waiver of the provisions of this section and bidders must satisfy themselves through their own investigations as to conditions to be encountered.

4.3.6 The availability or use of information described in these Instructions to Bidders and other bid documents shall not be construed in any way as a waiver of the provisions of the Instructions of Bidders and a Bidder or Contractor is cautioned to make such an investigation and examination as it deems necessary to satisfy itself as to conditions to be encountered in the performance of the work and, with respect to possible local material sources, the quality and quantity of material available from such property and the type and extent of processing that may be required in order to produce material conforming to the requirements of the Specifications.

4.3.7 No information derived from such inspection of records of investigations or compilations thereof made by the Engineer, will in any way relieve the bidder or Contractor from any risk or from properly fulfilling the terms of the Contract.

4.3.8 Information derived from inspection of topographic maps, or from Plans showing location of utilities and structures will not in any way relieve the Contractor from any risk, or from properly examining the site and making such additional investigations as it may elect, or from properly fulfilling all the terms of the Contract.

4.4 FORM OF BID AND SIGNATURE

Bids shall be submitted only on the forms attached hereto or copies thereof and shall be enclosed in a sealed envelope and marked and addressed as hereinafter directed. The Bidder shall state in figures the unit prices or the specific sums as the case may be, for which he proposes to supply the labor, materials, supplies tools or equipment, and perform the work required by the Contract Documents. If the Bid is made by an individual, it shall be signed by its full name and address shall be given; if it is made by a partnership, it shall be signed with the partnership name by a member of the partnership, who shall also sign his own name, and the name and address of each member of such partnership shall be given; and, if it is made by a corporation the name of the corporation shall be given and it shall be signed by its duly authorized officer or officers, the name(s) and title(s) of all signing officers, of the corporation shall be given, and the address of the corporation and the state in which incorporated shall be stated. Bids will be considered only from persons licensed as required under applicable provisions of the Contractors' State License Law (California Business and Professions Code section 7000, et seq.) and rules and regulations adopted pursuant thereto; and each bidder shall insert its type of contractor's license, license number, and other requested information in the place provided in the bid. No oral, telephonic, e-mail, facsimile or telegraphic Bid or modification of a Bid will be considered.

4.5 SUBMISSION OF BIDS

4.5.1 All Bids must be submitted not later than the time prescribed, at the place and in the manner set forth in the Invitation to Bid. The District shall not consider any Bid received after the time fixed or received at any place other than the place stated in the Invitation to Bid. Bids must be made on the prescribed Bid forms. A complete Bid requires submission of fully completed and executed: Bid, Designation of Subcontractors (if applicable), Bid Bond (or other bid guarantee), Experience Qualifications and Noncollusion Declaration. Each Bid must be submitted in a sealed envelope, so marked as to indicate its contents without being opened, and addressed in conformance with the instructions in the Invitation to Bid. The bidder is wholly responsible to see that its Bid is submitted at the time and place named for the opening of bids.

4.5.2 Bids shall acknowledge receipt of all addenda (identified by addendum no.) issued during the bidding period. Failure to acknowledge an addendum or clarification may result in the Bid being rejected as not responsive.

4.5.3 Bids shall be open at the time and place specified in the Invitation to Bid, unless changed by addendum. All Bids will be opened and read publicly. Bidders, their representatives and other interested parties, are invited to be present at the opening.

4.6 PREPARATION OF THE BID

4.6.1 Blank spaces in the Bid shall be properly completed. The phraseology of the Bid must not be changed and no additions shall be made to the items mentioned therein. Unauthorized conditions, limitations or provisions attached to a Bid may render it nonresponsive and may cause its rejection. If erasures, interlineations or other changes appear on the form, each erasure, interlineation or change must be initialed by the person signing the Bid. Alternative Bids will not be considered unless specifically provided for in the Bid Schedule.

Where performance and/or labor and material bonds are required, the Bidder shall name in his Bid the surety or sureties which have agreed to furnish the bonds.

4.6.2 Section 5.41 of the Contract General Conditions provides that the successful Contractor shall pay all federal, state and local taxes, including manufacturers' taxes, sales taxes, use taxes, processing taxes, and payroll, wage, insurance, social security, and unemployment taxes on wages, salaries or any remuneration paid to Contractor's employees. A bidder's bid prices shall be deemed to include all applicable taxes, and there shall be no separate bid item or billing for taxes.

4.7 BID GUARANTEE

4.7.1 All Bids shall be accompanied by a Bid Bond, as defined, made payable to the District. The Bid Bond must be enclosed in the same envelope with the Bid. The amount of the Bid Bond shall be not less than 10 percent of the total amount of the Bid.

4.7.2 If a bond is utilized, the Attorney in Fact (resident agent) who executes the Bid Bond on behalf of the surety company must attach a copy of his Power of Attorney as evidence of his authority. A notary shall acknowledge the power as of the date of execution of the surety bond which it covers. A bond will be accepted only if it is made out on either the Bid Bond form enclosed in these documents or on a form which substantially conforms to it.

4.8 LIST OF SUBCONTRACTORS; SUBCONTRACTING LIMITS

4.8.1 Each Bidder shall set forth in its Bid on the form provided the following information in accordance with the provisions of California Public Contract Code section 4100, et seq.: (a) The name, location of the place of business, and California contractor's license number of each subcontractor who will perform work or labor or render service to the Contractor in or about the construction of the work or improvement, and of each subcontractor who, under subcontract to the Contractor, is to specifically fabricate and install or provide a portion of the work or improvement according to the Contract Documents, in any amount in excess of 1/2 of 1 percent of the Contractor's total Bid; and (b) The portion of the work that will be done by each such subcontractor. Only one subcontractor shall be listed for each such portion of the work as defined in the Bid. If the Bidder fails to specify a subcontractor for any portion of the work to be performed under the Contract, the Bidder agrees to perform that portion of the work itself.

4.8.2 The Contractor shall perform with its own organization work amounting to not less than 50 percent of the original total contract price, except that any designated "Specialty Items" may be performed by subcontract and the amount of any such "Specialty Items" so performed may be deducted from the original total contract price before computing the amount of work required to be performed by the Contractor with its own organization. When items of work in the Bid schedules are preceded by the letter (S), such items shall be deemed designated "Specialty Items." Where an entire item is subcontracted, the value of work subcontracted will be based on the contract item bid price. When a portion of an item is subcontracted, the value of work subcontracted will be based on the estimated percentage of the contract item bid price, determined from information submitted by the Contractor, subject to approval by the Engineer.

4.9 INTERPRETATION OF CONTRACT DOCUMENTS

4.9.1 Any explanation desired by the bidders regarding the meaning or interpretation of any of the Contract Documents must be requested in writing, with sufficient allowance of time for receipt of reply before the time set for opening of Bids. Any such explanations or interpretations will be made only in the form of addenda to the documents and will be furnished to all bidders who shall submit all addenda with their Bids. Neither the Engineer nor any representative of the District is authorized to give oral explanations or interpretations of Contract Documents, and a submission of a Bid constitutes agreement by the bidder that he has placed no reliance on any such oral explanation or interpretation. However, the Engineer may, upon inquiry by bidder, orally direct the bidder's attention to specific provisions of the Contract Documents which cover the subject of the inquiry.

4.9.2 The Bidder shall review the Plans and Specifications prior to submission of his bid and shall report any errors and omissions noted by the Bidder to the District prior to such submission.

4.10 MODIFICATION OF BIDS

A Bidder may modify its Bid by written communication provided such communication is received by the District prior to the closing time for receipt of Bids. The written communication should not reveal the Bid price but should state the addition or subtraction or other modification so that the final prices or terms will not be known by the District until the sealed bid is opened.

4.11 WITHDRAWAL AND RETURN OF BIDS

Bids may be withdrawn without prejudice by written, e-mail, facsimile or telegraphic requests received from the Bidder prior to the time for opening of Bids, and Bids so withdrawn will be returned to bidders unopened. No Bid may be withdrawn after the hour affixed for opening Bids without rendering the accompanying Bid Bond subject to retention as liquidated damages in like manner as in the case of failure to execute the Contract after award, as provided in the Contract Documents. Negligence on the part of the Bidder preparing its Bid shall not constitute a right to withdraw the Bid subsequent to the opening of Bids. Any Bid received after the bid submission deadline shall be returned to the bidder unopened.

4.12 DISCREPANCIES

In the case of discrepancy between unit prices and totals, unit prices will prevail. In case of discrepancy between words and figures, words will prevail.

4.13 SERVICING AND MAINTENANCE

Each Bidder must, if requested, furnish evidence that there is an efficient service organization which regularly carries a stock of repair parts for the proposed equipment to be furnished and installed in the work and that the organization is conveniently located for prompt service.

4.14 DISQUALIFICATION OF BIDDERS

4.14.1 More than one Bid from an individual, firm, partnership or corporation under the same or different names will not be considered. Reasonable grounds for believing that any individual, firm, partnership or corporation is interested in more than one Bid for the work contemplated may cause the rejection of all Bids in which the individual, firm, partnership or corporation is interested. If there is reason for believing that collusion exists among the bidders, any or all Bids may be rejected. Bids in which the price is obviously unbalanced may be rejected.

4.14.2 All bidders are put on notice that any collusive agreement fixing the prices to be bid so as to control or affect the awarding of this Contract is in violation of the competitive bidding requirements applicable to the District, including Public Contract Code section 7106, and may render void any contract let under such circumstances.

4.15 AWARD OF CONTRACT

4.15.1 The District reserves the right to accept or reject any and all Bids during the time for awarding the Contract, and to waive any informality or irregularity in any Bid. No Bid can be withdrawn during the time for awarding the Contract. The time for awarding the Contract is provided in section 4.17.

4.15.2 Before a Bid is considered for award, the District may, in addition to the Experience Qualifications form, require a Bidder to submit a statement of facts and detail as to its business, technical organization and financial resources and equipment available and to be used in performing the work. Additionally, the District may require evidence that the Bidder has performed other work of comparable magnitude and type. The District expressly reserves the right to reject any Bid if it determines that the business and technical organization, equipment, financial and other resources or other experience of the Bidder (including the Bidder's subcontractors) is not sufficiently qualified for the work bid upon and, therefore, justifies such rejection.

4.15.2 The award of the Contract, if it is awarded, will be to the lowest responsible and responsive Bidder whose Bid complies with the requirements of the Contract Documents.

4.16 CONTRACT BONDS

4.16.1 The successful Bidder shall furnish both a Performance Bond and a Payment Bond in the type, form and amount specified in the forms included with the Contract Documents. These bonds shall be furnished on such forms or on substantially similar forms acceptable to the District. The Payment Bond shall comply with California Civil Code sections 9550 and 9554 and applicable provisions of the California Bond and Undertaking Law (California Code of Civil Procedure section 995.010 et seq.). The bonds shall be obtained from a responsible corporate surety (or sureties) acceptable to the District, who is (or are) in good standing with and duly admitted by the Insurance Commissioner of the State of California to act as surety upon bonds and undertakings. The surety (or sureties) shall furnish reports as to its financial condition from time to time as requested by the District. The premiums for the bonds shall be paid by the successful Bidder.

4.16.2 If any surety becomes unacceptable to the District, is deemed insolvent, is no longer an admitted surety in California, or fails to furnish reports as to its financial condition as requested by the District, the Contractor shall promptly furnish such additional security as may be required from time to time to protect the interests of the District and of persons supplying labor or materials in the prosecution of the work contemplated by this Contract.

4.16.3 In the event of any conflict between the terms of the Contract and the terms of the bonds, the terms of the Contract shall control and the bonds shall be deemed to be amended thereby. Without limiting the foregoing, the District shall be entitled to exercise all rights granted to it by the Contract in the event of default, without control thereof by the surety, provided that the District gives the surety notice of such default at the time or before the exercise of any such right by the District, and, regardless of the terms of the bonds, the exercise of any such right by the District shall in no manner affect the liability of the surety under the bonds.

4.17 EXECUTION OF CONTRACT

The successful Bidder will be notified in writing by the District of the award of the Contract within thirty (30) days after opening of Bids, unless the time period is extended as provided in the Invitation to Bid. Accompanying the District's notice of award will be the Contract, which the District may require to be executed in duplicate or triplicate. Within ten (10) days following receipt of such notice of award, the successful bidder will be required to execute and return the original contract(s), together with the performance and payment bonds, and the required certificates and proof of insurance documents (see sections 2.4 and 5.58), to the District. Failure to do so shall be just cause for annulment of the award and for forfeiture of the Bid Bond which shall be retained as liquidated damages, and it is agreed that the Bid Bond sum is a fair estimate of the amount of damages that the District will sustain by reason of such failure. The District will promptly determine whether such Contract, bonds and insurance are as required by the Contract Documents, and upon such determination will forward a fully executed copy of the Contract and a Notice to Proceed with the work to the successful bidder. Signature by both parties constitutes execution of the Contract. In the event of failure of the lowest responsible responsive Bidder to sign and return the Contract with acceptable bonds and insurance as prescribed herein, the District may award the Contract to the next lowest responsible responsive Bidder, and, in the event that Bidder fails to sign and return the Contract with acceptable bonds and insurance, the District may award the Contract to the then next lowest responsible responsive Bidder, etc.

4.18 RETURN OF BID GUARANTEES

All Bid Bonds will be held until the Contract has been finally executed, after which all Bid Bonds, other than any Bid Bonds which have been forfeited, will be returned to the respective bidders whose Bids they accompanied, but in no event shall non-forfeited bonds be held by the District beyond 60 days from the date that the District awards the Contract.

4.19 POWER OF ATTORNEY

The Attorney in Fact (resident agent) who executes the Performance Bond and Payment Bond on behalf of the surety company must attach a copy of his Power of Attorney as evidence of

his authority. A notary public shall acknowledge the power as of the date of the execution of the bond which it covers.

4.20 TIME OF COMPLETION

The time of completion of the work to be performed under this Contract is the essence of the Contract. Delays and extensions of time may be allowed in accordance with the provisions of the General Conditions. The time allowed for the completion of the work is stated in the Contract.

4.21 LICENSING REQUIREMENTS FOR CONTRACTORS

The Contractor shall hold such licenses as may be required by the laws of the State of California for the performance of the work specified in the Contract Documents, and shall have the following classification or type of license for the work issued by the California Contractors State License Board: Class A.

4.22 PREVAILING WAGES

Copies of the prevailing rate of per diem wages are on file at the District's office, and will be made available to any interested party on request. The Contractor shall post at each job site a copy of the determination of the Director of Industrial Relations of the prevailing rate of per diem wages. Furthermore, Contractor must post job site notices, as required by Section 1771.4(a)(2) of the Labor Code and prescribed by regulation.

4.23 BID PROTEST

4.23.1 Any bid protest must be submitted in writing to the District before 5:00 p.m. of the fifth working day following the bid opening. "Working day" as used in this section means a day that District is open for normal business, and excludes weekends and holidays observed by District. The party filing the protest must have actually submitted a timely bid for the work. A subcontractor of a bidder may not submit a bid protest. A bidder may not rely on a bid protest submitted by another bidder, but must timely file its own protest.

4.23.2 The bid protest shall be in the form of a letter or memorandum and it shall include the following: a complete statement of the basis or bases for the protest, including any supporting documents; a reference to the specific portion(s) of the Contract Documents which form(s) the basis for the protest; and, the name, address and telephone number of the person representing the protesting bidder.

4.23.3 The bidder filing the protest shall concurrently transmit a copy of the protest document and any attached documentation to all other bidders with a direct financial interest who may be adversely affected by the outcome of the protest, including all other bidders who appear to have a reasonable prospect of receiving an award depending upon the outcome of the protest.

4.23.4 The District will issue a prompt decision on the protest. If the District determines that a protest is frivolous, the party originating the protest may be determined to be irresponsible and that party may be determined to be ineligible for future contract awards.

4.23.5 The procedure and time limits set forth in this section are mandatory and are the bidder's sole and exclusive remedy in the event of a bid protest. Failure to comply with these procedures shall constitute a waiver of any right to further pursue the bid protest, including filing a Government Code claim, lawsuit or other legal proceeding.

4.23.6 For purposes of this section, a "bid protest" means any protest, objection, complaint or challenge to, concerning or against (a) a rejection of a bidder for any reason, (b) a contract award to the apparent low bidder, (c) another bidder's bid, or (d) the legality or enforceability of the bid documents.

4.24 INELIGIBLE CONTRACTORS AND SUBCONTRACTORS

The District shall not accept a bid from a bidder who is ineligible to bid or work on, or be awarded, a public works project pursuant to California Labor Code section 1777.1 or 1777.7. Bidders and the Contractor who is awarded the project contract shall not utilize, or allow work by, any subcontractor who is ineligible to bid or work on, or be awarded, a public works project pursuant to California Labor Code section 1777.1 or 1777.7. (See California Public Contract Code section 6109.) The California Division of Labor Standards Enforcement publishes a list of debarred contractors and subcontractors on the Internet at http://www.dir.ca.gov/DLSE/debar.html

4.25 AUDIT OF BID DOCUMENTS

The District shall have the right to audit all (including review, obtain and copy upon reasonable notice) documents that comprise or relate to a bidder's bid in connection with any request, claim or contention raised by any bidder, including, but not limited to, Public Contract Code Sections 4100, et seq., or 5100, et seq., or any bid protest. The term "records" and the term "documents" as used herein shall include, but not be limited to, original estimates, subcontracts, bids, proposals, purchase orders, books, documents, accounting records, papers, correspondence, project files and scheduling information, including the original Bid and all documents related thereto and to its preparation, the as-planned construction schedule and any related documents.

4.26 SUBSTITUTIONS DURING BIDDING

Manufacturers or suppliers of materials and equipment may offer an alternative product to the Contractor, except where alternatives or substitutes are specifically excluded, and request that alternatives to specified products be considered equal. Inclusion of such alternatives in the bid is the responsibility of the Contractor. Inclusion should only be considered if the Contractor believes the offered alternative is equal in quality and performance to the specified product. After award of the Contract, such offers of alternative products will be reviewed and processed as a substitution as provided under General Conditions section 5.25 (Trade Names and Alternatives). Inclusion or offers of alternative products will not be reviewed or processed during the bidding period.

5 GENERAL CONDITIONS

5.1 INTENT OF CONTRACT DOCUMENTS/MEANS AND METHODS

5.1.1 The intent of the Contract Documents is to prescribe the details for the construction and completion of the work which the Contractor undertakes to perform in accordance with the terms of the Contract. Where the Specifications and Plans describe portions of the work in general terms, but not in complete detail, it is understood that only the best general practice is to prevail and that only materials and workmanship of the first quality are to be used. Unless otherwise specified, the Contractor shall furnish all labor, materials, tools, equipment and incidentals and do all the work involved in performing the Contract in a satisfactory and workmanlike manner.

5.1.2 The technical specifications are presented in sections for convenience. However, this presentation does not necessarily delineate trades or limits of responsibility. All sections of the Specifications and Plans are interdependent and applicable to the project as a whole.

5.1.3 The Contract Documents are complementary, and what is called for in any one shall be as binding as if called for in all.

5.1.4 It is expressly stipulated that the drawings, specifications and other Contract Documents set forth the requirements as to the nature of the completed work and do not purport to control the method of performing work except in those instances where the nature of the completed work is dependent on the method of performance.

5.1.5 Except as provided elsewhere in the Contract Documents, neither the District nor the Engineer will be responsible for or have control or charge of construction means, methods, techniques, sequences or procedures, or for safety precautions and programs in connection with the work. Except as provided elsewhere in the Contract Documents, neither the District nor the Engineer will be responsible for or have control or charge over the acts or omissions of the Contractor, or any of their subcontractors, agents or employees, or any other persons performing any of the work. Any general control of the work exercised by the District or its authorized representatives shall not make the Contractor an agent of the District, and the liability of the Contractor for all damages to persons and/or to public or private property arising from the Contractor's execution of the work shall not be lessened because of such general control.

5.2 CONTRACTOR'S UNDERSTANDING

It is understood and agreed that the Contractor has, by careful examination, satisfied itself as to the nature and location of the work, the conformation of the ground, the character, quality and quantity of the materials to be encountered, the character of equipment and facilities needed preliminary to and during the prosecution of the work, the general and local conditions, and all other matters which can in any way affect the work under this Contract. No verbal agreement or conversation with any officer, agent or employee of the District, either before or after the execution of this Contract, shall affect or modify any of the terms or obligations herein contained.

5.3 CHANGES IN THE WORK

5.3.1 The District reserves the right to make such alterations, deviations, additions to, deletions or omissions from the plans and specifications, including the right to increase or decrease the quantity of any item or portion of the Work, as may be deemed by the Engineer to be necessary or advisable and to require such extra work as may be determined by the Engineer to be required for the proper completion or construction of the whole work contemplated. Such changes, no matter how many, shall be within the contemplation of this Contract and shall not be the basis for a compensable delay or a claim for lost profits.

5.3.2 The Engineer shall have the authority to order minor changes in the work not involving any increase or decrease in the Contractor's cost of, or time required for, performance of the Contract. Such minor changes shall be effected by written order of the Engineer, and the Contractor shall carry out such written orders promptly. If the Contractor disagrees with the Engineer's determination that the minor change does not involve any increase or decrease in the Contractor's cost of, or time required for, performance of the Contract, then the Contractor may file and pursue a claim pursuant to section 5.5. The written claim must be submitted to the Engineer within 15 days after the date of the Engineer's written order. If the Contractor believes that any such work is beyond the scope of the contract documents, the Contractor shall provide a written "Daily Extra Work Report" documenting the alleged extra work, which will be submitted to and verified by the Engineer or the District's representative at the end of the day the work was performed.

5.3.3 If any change in the work ordered by the Engineer causes an increase or decrease in the Contractor's cost of, or time required for, performance of the Contract, an adjustment and modification of the Contract will be made in the form of a Change Order which will set forth (a) the changes, additions and/or deductions in the work to be done, (b) the increase or decrease in compensation due the Contractor, if any, or the method by which the increase or decrease, if any, will be calculated, and (c) the adjustment in the time of completion of the work, if applicable. A Change Order may be issued to the Contractor at any time.

5.3.4 The compensation to be paid for any work addressed in a Change Order shall be determined in one or more of the following ways as shown in the Change Order:

a. By unit prices;

b. By an agreed-upon lump sum; or

c. By the cost-plus basis determined pursuant to section 5.3.9.

5.3.5 Contractor shall keep full and complete records of the cost of any work addressed in a Change Order in the form and manner prescribed by the Engineer and shall permit the Engineer to have access to such records as may be necessary to assist in the determination of the compensation payable for such work.

5.3.6 With respect to a Change Order involving the deletion or reduction of work, the Engineer shall determine the appropriate reduction in the Contract price based on the lump sum and/or per unit prices in the bid schedule for the items of work deleted or

reduced by the Change Order. The Contractor shall not be entitled to claim damages for anticipated profits on any portion of the work that may be deleted.

5.3.7 Upon receipt of a Change Order signed by the Engineer, the Contractor shall forthwith proceed with the ordered work, unless otherwise directed by the Engineer. If the Contractor agrees with the terms and conditions of the Change Order, then it shall sign the Change Order.

5.3.8 Should the Contractor disagree with any terms or conditions set forth in a proposed Change Order, it shall submit a written protest to the Engineer within 15 days after the receipt of the proposed Change Order. The protest shall state the points of disagreement, addressing, if applicable, the quantities and cost involved and the adjustment of time for completion.

5.3.8.1 If a written protest is not timely submitted by the Contractor, then the proposed Change Order, including all cost and time adjustment provisions, if any, that was submitted to the Contractor shall be deemed final and acceptable to the Contractor even if not signed by the Contractor. Any payment under an unprotested Change Order's cost adjustment provisions shall constitute full compensation for all work included in or required by the Change Order.

5.3.8.2 If the Contractor timely protests a proposed Change Order, it shall nevertheless proceed with the ordered work pending resolution of the protest.

5.3.8.3 If the Contractor timely protests a proposed Change Order, the Engineer shall render in writing its determination of the protest within fifteen (15) days. If the Contractor disputes the determination, then the Contractor may file and pursue a claim pursuant to section 5.5. The written claim must be submitted to the Engineer within 15 days after the date of the Engineer's written determination on the protest. If the Contractor does not timely file a claim, then the proposed Change Order (as may have been revised by the Engineer's determination on the protest), including all cost and time adjustment provisions, if any, shall be deemed final and acceptable to the Contractor even if not signed by the Contractor. Any payment under such a Change Order's cost adjustment provisions shall constitute full compensation for all work included in or required by the Change Order.

5.3.8.4 If the Contractor refuses to accept a Change Order, the District may issue it unilaterally. The Contractor shall comply with the requirements of the Change Order. The District shall provide for an equitable adjustment to the Contract, and compensate the Contractor accordingly. If the Contractor does not agree that the adjustment is equitable, it may submit a claim in accordance with section 5.5.

5.3.9 The following shall constitute the cost-plus basis of payment:

5.3.9.1 Charges for all of the labor furnished and used by the Contractor shall be made for manual classifications up to and including general foreman. It will not include charges for assistant superintendents, superintendents, office personnel, timekeepers and maintenance mechanics. The time charged to work shall be subject to the daily approval of the Engineer and evidence of such approval shown on approved Daily Extra Work Reports shall

be submitted with the billing. (See sample Extra Daily Work Report attached to Specification [specification number].) Labor rates used to calculate the costs shall be those basic wages including current employer contributions for fringe benefits and federal and state surcharges and including applicable subsistence and travel allowances, all as actually paid to workers under collective bargaining agreements or as a regular practice of the employer. No time or charges will be allowed except when the workers are actually engaged in the proper, efficient and diligent performance or completion of the work as authorized. Overtime shall not be worked without prior approval of the Engineer.

5.3.9.2 Charges for the rental and operation of the equipment furnished and used by the Contractor shall be made for all prime construction and automotive equipment. It shall not include charges for listed equipment or major tools with a new cost of $500 or less. Equipment time charges shall be itemized on a Daily Extra Work Report, subject to the daily approval of the Engineer and evidence of such daily approval shall be submitted with the billing. The equipment rental and operation rates used shall be those agreed upon by the Engineer and the Contractor prior to commencement of the work and shall include an approved allowance for depreciation. The cost for each type of approved equipment (active or standby) shall be no greater than the amount allowed in the latest edition of the Caltrans Standard Equipment Rates. Time and charges shall be allowed only when equipment is actually being used for the proper and efficient performance or completion of the work as authorized.

5.3.9.3 Charges for the cost of materials furnished by the Contractor shall be made, provided such furnishing was specifically authorized in the work order and the actual use verified by the Engineer. Charges shall be net cost to the Contractor delivered at the job, including all applicable sales taxes; and a vendor's invoice must accompany the billing along with verification of use of such materials by the Engineer.

5.3.9.4 A charge for major tools, supplies, overhead, supervision and profit will be allowed in the amount of 15% of the total direct labor costs, equipment costs, and material costs, as defined in sections 5.3.9.1 to 5.3.9.3.

5.3.9.5 When all or any part of work is performed by any of the Contractor's subcontractors, the markup percentage established in section 5.3.9.4 shall be applied to the subcontractor's actual cost of such work (as determined in sections 5.3.9.1 to 5.3.9.3), to which a markup of 5% on the subcontracted portion of the extra work may be added by the Contractor.

5.3.10 Lump sum change orders shall include all work and costs associated with the change work item(s) and shall be agreed to and signed by both the Contractor and the District prior to commencing the work.

5.3.10.1 A charge for major tools, supplies, overhead, supervision and profit will be allowed an amount no greater than 15% of the total direct labor, equipment, and material costs.

5.3.10.2 When all or any part of work is performed by any of the Contractor's subcontractors, the markup percentage established in section 5.3.10.1 shall be applied

to the subcontractor's actual cost of such work, to which a markup of no greater than 5% on the subcontracted portion of the extra work may be added by the Contractor.

5.3.11 The consent of the Contractor's bond sureties shall not be required as to any change or extra work ordered by the District, and the liability of the Contractor's bonds and sureties shall be increased or decreased accordingly without notice to the sureties.

5.3.12 The District reserves the right to contract with any person or firm other than the Contractor for any or all extra work.

5.3.13 If the total pay quantity of any item of work required under the Contract to be paid at a unit price exceeds the item as bid by more than 25 percent, then in the absence of an executed contract change order specifying the compensation to be paid, the work in excess of 125 percent of such estimate may, at the District's discretion, be paid for by a cost plus basis of payment as described at section 5.3.9, instead of at the unit price.

5.3.14 Any extra work related to differing site conditions pursuant to Public Contract Code section 7104 shall be addressed in accordance with section 5.51.8.5 of these General Conditions. No claim of the Contractor under this clause shall be allowed unless the Contractor has promptly given the notice required before any such claimed conditions are disturbed.

5.4 ADJUSTMENTS FOR PRICE INCREASES

5.4.1 Prior to submitting a bid, the Contractor shall review all market conditions that could reasonably have an effect on or cause changes in unit pricing. Such conditions shall include proposed or effective tariff rates, supply chain disruptions, labor costs, currency fluctuations, or other market factors. Contractor's bid shall take all such market conditions into account, and Contractor shall not be entitled to any adjustment in the Contract amount based on their existence.

5.4.2 If, after the date of Contractor's bid submission, Contractor identifies an unanticipated market condition that directly and materially affects the unit pricing or availability of materials or equipment required for the Work, and such increases are unavoidable by sourcing from other suppliers as discussed below, Contractor shall be entitled to an adjustment to the Contract amount subject to the conditions and limitations set forth in this section 5.4.

5.4.3 Upon learning of a market condition that directly and materially affects the unit pricing or availability of materials or equipment required for the Work, Contractor shall make commercially reasonable efforts to avoid the new costs and mitigate any increased costs to District. Contractor shall, without limitation, determine if there are alternate suppliers that can furnish necessary materials or equipment at a lower cost to Contractor, for example, by sourcing materials or equipment from the United States, or a country subject to lower duties than the Contractor's original intended supplier. If Contractor is able to identify a lower cost supplier through such efforts, Contractor shall procure supplies from that source before seeking an adjustment in the Contract amount. Any adjustment to the Contract amount shall be based on actual increased costs incurred by Contractor despite such efforts.

5.4.4 Contractor may only obtain an adjustment to the Contract amount if its request is supported by the bid documents it submitted in compliance with the requirements of the Invitation to Bid. If the bid documents reflect that Contractor already accounted for a market condition that affects the unit pricing or availability of materials or equipment through a contingency or reserve that was part of the Contractor's bid, Contractor will not be entitled to a price adjustment.

5.4.5 Adjustment - Contractor shall notify Owner in writing within fourteen (14) calendar days after Contractor becomes aware or should reasonably have become aware of an unanticipated new market condition that may entitle Contractor to an adjustment to the Contract amount.

5.4.5.1 Contractor's request for adjustment shall include: identification of the specific materials or equipment affected; documentation of the original cost of the affected materials or equipment as included in Contractor's bid; documentation of the increased cost directly attributable to the unanticipated new market condition; documentation demonstrating that Contractor could not have anticipated and planned for the cost increase before submitting its bid and is eligible for an adjustment under this section; documentation of compliance with the requirements of this section, including Contractor's efforts to identify and contract with alternate suppliers (subject to compliance with the requirements of Section 5.25 of these General Conditions); and the proposed adjustment to the Contract amount.

5.4.5.2 Prior to agreeing to any adjustment to the Contract amount, Owner shall have the right to audit Contractor's books, records, documents, and other evidence pertaining to the request for adjustment to verify that all conditions precedent to a price adjustment have been met. Contractor shall maintain all such records for a period of not less than three (3) years after final payment under this Contract.

5.4.5.3 Owner reserves the right to reject or reduce any request for adjustment that does not meet the requirements of this section 5.4 or is not substantiated by sufficient documentation. The parties agree that any adjustment to the Contract amount shall be limited to half of the actual increased cost directly attributable to the new market condition, without any additional markup for overhead and profit. In effect, the parties agree to split prorata such actual increased costs. After Contractor's share of the actual costs are determined, the Engineer shall submit a Change Order that reflects the lumpsum change in the Contract amount.

5.4.5.4 Nothing in this section 5.4 shall be construed to relieve Contractor of its obligation to complete the Work within the Contract Time or to entitle Contractor to any time extension due to an unanticipated new market condition.

5.5 CLAIMS AND RESOLUTION OF DISPUTES

5.5.1 General. The parties intend by this section 5.5 that differences between the parties, arising under the Contract, be brought to the attention of the Engineer at the earliest possible time in order that such matters may be settled, if possible, or other appropriate action promptly taken. The parties agree to initially strive to resolve all disputes amicably and in an informal manner. Any dispute resolved informally shall be documented by the

Engineer, and if the dispute resolution involves a change in the contract work, increase or decrease in the compensation due the contractor, or adjustment in the time of completion of the Work, then the informal dispute resolution shall be confirmed by a Change Order pursuant to section 5.3. Informal discussions or negotiations with the Engineer concerning informal resolution of a dispute shall not toll or suspend the claim filing and other deadlines provided below, unless so provided by the Engineer in writing. The willingness of the Engineer to engage in any such discussions is not a waiver of the District's right to deny a claim or dispute it based on lack of merit, or procedural deficiency, or both.

5.5.2 Compliance Required. Contractor shall not be entitled to any additional time to complete Work or to the payment of any additional compensation for claimed extra work (or otherwise on account of any claim, cause, act, failure to act, or happening of any event or occurrence) unless either District has issued a Change Order pursuant to section 5.3 or a claim has been timely filed and approved pursuant to this section 5.5. If the Contractor fails to file a written claim within the claim deadline of section 5.5.4, then the Contractor agrees that it has waived any right or remedy to thereafter pursue the claim against the District in any administrative, arbitration or litigation proceeding, and the District may elect to document this waiver.

5.5.3 Scope of Claims. A claim for purposes of this section 5.5 means a separate demand by the Contractor for (a) a time extension (including a demand for relief from damages or penalties for delay assessed by the District under the Contract), (b) payment of money or damages arising from work done by, or on behalf of, the Contractor pursuant to the Contract and payment of which is not otherwise expressly provided for or the Contractor is not otherwise entitled to, or (c) an amount the payment of which is disputed by the District.

5.5.4 Filing of Contract Claim; Contents; Filing Deadline

5.5.4.1 The Contractor shall file any "Contract Claim" with the Engineer. A Contract Claim must (a) be in writing, (b) be labeled or clearly indicated as a claim under the Contract, (c) set forth in detail the reasons why the Contractor believes additional compensation or a time extension is or may be due, the nature of the costs involved, and, insofar as possible, the amount of the claim, and (d) include (or reference earlier provided) documents that support and substantiate the claim as to both entitlement and quantification of time, money, or both.

5.5.4.2 A Contract Claim must be submitted to the Engineer within the following claim filing deadlines: (a) if a deadline is set forth in the Contract Documents for filing of the particular claim, then the claim must be filed by the specified time; (b) if the claim relates to extra, additional or unforeseen work for which the Contractor intends to demand additional compensation, a time extension, or both, notice shall be given to the Engineer prior to the time that the Contractor commences performance of the work giving rise to the potential claim for additional compensation or time extension, and Contractor shall not proceed with that work until so directed by the Engineer; and (c) for all other claims not included within (a) or (b), the claim must be filed on or before 15 days after the date of the occurrence, event or circumstance giving rise to the claim. In no event shall a Contract Claim be filed later than the date of final payment.

5.5.5 Processing of Claims, Generally. This Contract provides for three types of Contract Claims, which will be processed and resolved under different subsections. Any claim for money or damages of $375,000 or less or for a time extension (i.e., any claim subject to Public Contract Code section 20104) shall be processed and resolved in accordance with section 5.5.6. Any claim for money or damages of more than $375,000 (i.e., any claim not subject to Public Contract Code section 9204 or 20104) shall be processed and resolved in accordance with section 5.5.7. Any Contract Claim sent to District by registered mail or certified mail with return receipt requested (i.e., any claim subject to Public Contract Code section 9204) shall be processed and resolved pursuant to section 5.5.8.

Note that Public Contract Code section 9204 will sunset on January 1, 2027, unless extended or made permanent by the Legislature.

5.5.6 Claims for $375,000 or Less or for Time Extension

5.5.6.1 Application. This section applies to all claims for $375,000 or less in value, including any claim for a time extension or for a time extension that includes claimed delay damages of $375,000 or less.

5.5.6.2 District Response to Contract Claim. The Engineer shall respond in writing to the Contract Claim within 60 days of receipt of the claim (or within 45 days of receipt for claims of less than $50,000), or may request, in writing, within 30 days of receipt of the claim, any additional documentation supporting the claim or relating to defenses to the claim the District may have against the Contractor. If additional information is thereafter required, it shall be requested and provided pursuant to this subsection, upon mutual agreement of the Engineer and the Contractor. The Engineer's written response to the claim, as further documented, shall be submitted to the Contractor within 30 days after receipt (or 15 days after receipt for claims of less than $50,000) of the further documentation, or within a period of time no greater than that taken by the Contractor in producing the additional information or requested documentation, whichever is greater. The District shall not fail to pay money as to any portion of a Contact Claim that is undisputed except as otherwise provided in the Contract Documents.

5.5.6.3 Meet and Confer. If the Contractor disputes the Engineer's written response, or the Engineer fails to respond within the time prescribed, the Contractor may notify the District, in writing, either within 15 days of receipt of the Engineer's response or within 15 days of the Engineer's failure to respond within the time prescribed, respectively, and demand an informal conference to meet and confer for settlement of the issues in dispute. Upon such a demand, the District shall schedule a meet and confer conference within 30 days for the parties to consider settlement of the dispute. If the Contractor fails to timely demand a meet and confer conference within the applicable 15-day period, then the Contractor shall be deemed not to dispute the Engineer's written response to the Contract Claim and the Engineer's decision on the Contract Claim shall be final, conclusive and binding, and the Contractor shall be deemed to have waived all its rights to further protest, judicial or otherwise.

5.5.6.4 Government Code Claim. Following the meet and confer conference, if the Contract Claim or any portion remains in dispute, the Contractor may file a Government Code Claim as provided in Government Code title 1, division 3.6, part 3, chapters

1 (commencing with section 900) and 2 (commencing with section 910). The running of the period of time within which Contractor must file a Government Code Claim shall be tolled from the time the Contractor submits a timely Contract Claim pursuant to section 5.5.4 until the time that the Contract Claim is denied as a result of the meet and confer process, including any period of time utilized by the meet and confer process. The District shall respond to any Government Code Claim in accordance with the Government Claims Act.

5.5.6.5 Lawsuit. If the claim is not resolved pursuant to section 5.5.6.4, the Contractor may file a lawsuit on the claim within the limitations period provided by the Government Claims Act. If the Contractor fails to timely file a lawsuit within the limitations period of the Government Claims Act, then the District's response to the Government Code Claim shall be final, conclusive and binding on the Contractor, and the Contractor thereafter shall be barred from filing a lawsuit on the claim.

5.5.6.6 Mediation. If the Contractor timely files a lawsuit, then within 60 days, but no earlier than 30 days, following the filing of responsive pleadings, the court shall submit the matter to non-binding mediation (unless waived by mutual stipulation of both parties). The mediation process shall provide for the selection within 15 days by both parties of a disinterested third person as mediator, shall be commenced within 30 days of the submittal, and shall be concluded within 15 days from the commencement of the mediation unless a time requirement is extended upon a good cause showing to the court or by stipulation of both parties. If the parties fail to select a mediator within the 15-day period, any party may petition the court to appoint the mediator. The mediator's fees and expenses shall be split and paid equally between the parties. The court may, upon request by any party, order any witnesses to participate in the mediation process.

5.5.6.7 Arbitration. If the matter remains in dispute following the mediation or if the parties waive the mediation, then the case shall be submitted to judicial arbitration pursuant to Code of Civil Procedure part 3, title 3, chapter 2.5 (commencing with section 1141.10), notwithstanding section 1141.11 of that code. The Civil Discovery Act of 1986 (Code of Civil Procedure part 4, title 3, chapter 3, article 3 (commencing with section 2016.010)) shall apply to any proceeding brought under this subdivision consistent with the rules pertaining to judicial arbitration. The arbitrator shall be experienced in public works construction law. The arbitrator's fees and expenses shall be split and paid equally by the parties, except where the arbitrator, for good cause, determines a different division. The court may, upon request by any party, order any witnesses to participate in the arbitration process. Any party who, after receiving an arbitration award, requests a trial de novo but does not obtain a more favorable judgment shall (in addition to payment of any costs and fees under Code of Civil Procedure part 3, title 3, chapter 2.5 (commencing with section 1141.10)) pay the attorney's fees of the other party arising out of the trial de novo.

5.5.6.8 Interest. In any lawsuit filed under this subsection, District shall pay interest at the legal rate on any arbitration award or judgment. The interest shall begin to accrue on the date the lawsuit is filed in court.

5.5.7 Claims for More Than $375,000

5.5.7.1 Application. This section applies to all claims that exceed $375,000 in value, including any claim for time extension that includes claimed delay damages exceeding $375,000.

5.5.7.2 District Response to Contract Claim. The Engineer shall respond in writing to the Contract Claim within 60 days of receipt of the claim, or may request, in writing, within 30 days of receipt of the claim, any additional documentation supporting the claim or relating to defenses to the claim that the District may have against the Contractor. If additional information is thereafter required, it shall be requested and provided pursuant to this subsection, upon mutual agreement of the Engineer and the Contractor. The Engineer's written response to the claim, as further documented, shall be submitted to the Contractor within 30 days after receipt of the further documentation. If the Contractor fails to timely dispute the Engineer's decision on the matter in accordance with section 5.5.7.3, then the Contractor shall be deemed not to dispute the Engineer's written response to the Contract Claim and the Engineer's decision shall be final, conclusive and binding, and the Contractor shall be deemed to have waived all its rights to further protest, judicial or otherwise.

5.5.7.3 Government Code Claim. If the Contractor disputes the Engineer's written response to the Contract Claim, the Contractor may file a Government Code Claim as provided in Government Code title 1, division 3.6, part 3, chapters 1 (commencing with section 900) and 2 (commencing with section 910). District shall respond to any Government Code Claim in accordance with the California Government Claims Act.

5.5.7.4 Lawsuit. If the claim is not resolved pursuant to section 5.5.7.3, the Contractor may file a lawsuit on the claim within the limitations period provided by the Government Claims Act. If the Contractor fails to timely file a lawsuit within the limitations period of the Government Claims Act, then the District's response to the Government Code Claim shall be final, conclusive and binding on the Contractor, and the Contractor thereafter shall be barred from filing a lawsuit on the claim.

5.5.7.5 Judicial Reference. If the Contractor timely files a lawsuit, the case shall be submitted to judicial reference pursuant to California Code of Civil Procedure sections 638 and 640 through 645.1 (or any successor statute) and California Rules of Court title 3, division 9 (commencing with section 3.900). As authorized by Code of Civil Procedure section 638, a referee will consider and decide all factual and legal issues in the action. Each party acknowledges that it will not have any right to a jury trial or to have any judicial officer besides the referee hear or decide the action. When Contractor initiates the superior court lawsuit, it will, at the same time it files the complaint in the action, also file a motion for appointment of a single referee.

(a) Appointment of a referee shall be by mutual agreement within 30 days between the parties, and if unsuccessful, then by the court and will be governed by Code of Civil Procedure section 640, and subject to objection by either party as provided by Code of Civil Procedure section 641. The referee must be a retired judge or a licensed attorney with at least ten years substantive experience in public works construction matters.

(b) The parties shall be entitled to discovery and the referee shall oversee discovery and may enforce all discovery orders in the same manner as a superior court judge. The referee shall have the authority to consider and rule on appropriate pre-hearing and post-hearing motions in the same manner as a superior court judge. The referee will have the authority to set a briefing and hearing schedule for any such motion or for a hearing on the merits.

(c) The referee's statement of decision shall include findings of fact and conclusions of law. The statement of decision will stand as the decision of the superior court and, upon filing of the statement with the clerk of the court, judgment may be entered pursuant to Code of Civil Procedure section 644, subsection (a). The parties will have rights to appeal the final judgment so entered.

(d) Each party will pay half of the costs of the referee and the administrative fees of the reference proceeding, and each party will bear its own costs, expenses and attorney fees for the reference proceeding.

5.5.8 Claims Subject to Public Contract Code section 9204

5.5.8.1 The Contract Claim will be processed and resolved pursuant to Public Contract Code section 9204, which is summarized here:

(a) District Review of Claim. Within 45 days after receiving a complete Contract Claim, District shall review the claim and provide the Contractor a written statement identifying what portion of the claim is disputed and what portion is undisputed. District will pay any undisputed portion of the claim within 60 days from the date of the written statement. If District fails to timely issue a written statement, the claim shall be deemed rejected in its entirety.

(b) Meet and Confer Conference. If the Contractor disputes the District's written statement or if the Contract Claim is deemed rejected, the Contractor may demand and the parties will conduct an informal conference to meet and confer regarding settlement in accordance with section 9204, subsection (d)(2). Within 10 business days following the conclusion of the meet and confer conference, District shall provide Contractor a written statement identifying the portion (if any) of the claim remaining in dispute and any undisputed portion will be paid by District within 60 days after this written statement.

(c) Non-Binding Mediation. Any remaining disputed portion of the claim shall be submitted to nonbinding mediation in accordance with section 9204, subsection (d)(2).

(d) Interest. Any amount not paid in a timely manner as required by this subsection shall bear interest at a rate of 7 percent per annum until paid.

The foregoing is a summary of section 9204. In the event of any conflict between the summary and section 9204, the statute will govern.

5.5.8.2 Lawsuit and Reference. If mediation is unsuccessful and all or parts of the Contract Claim remain in dispute, then the Contractor may pursue a lawsuit (with judicial reference) in accordance with the procedures set forth at sections 5.5.7.4 through 5.5.7.5.

5.5.9 Contract Work Pending Claim Resolution. Unless otherwise directed in writing by the Engineer, pending resolution of a claim under this section 5.5, the Contractor shall continue to diligently prosecute the Contract work in accordance with the Contract Documents and the instructions of the Engineer.

5.5.10 Tort Claims. The provisions of this section 5.5 apply only to contract-based claims and they shall not apply to tort claims, and nothing in this section 5.5 is intended nor shall be construed to change the time periods for filing tort claims or actions specified by Government Code title 1, division 3.6, part 3, chapters 1 (commencing with section 900) and 2 (commencing with section 910).

5.6 GUARANTEE

5.6.1 In addition to warranties, representations and guarantees stated elsewhere in the Contract Documents, or implied-in-fact or in-law, the Contractor unconditionally guarantees all materials and workmanship furnished hereunder, and agrees to repair or replace or both at its sole cost and expense, and to the satisfaction of the Engineer and the District, any and all materials which may be defective or improperly installed.

5.6.2 The Contractor shall repair or replace to the satisfaction of the Engineer any or all such work that may prove defective in workmanship or materials, ordinary wear and tear excepted, together with any other work which may be damaged or displaced in so doing. Contractor shall leave the site of any such repair or replacement work in satisfactory working order and condition.

5.6.3 In the event of failure to comply with the above stated conditions within a reasonable time, the District is authorized to have the defect repaired and made good at the expense of the Contractor who will pay the costs and charges therefor immediately upon demand, including any reasonable management and administrative costs, and engineering, legal and other consultant fees incurred to enforce this section.

5.6.4 The signing of the Contract by the Contractor shall constitute execution of the above guarantees. Except as otherwise provided in this Contract, the guarantees and warranties shall remain in effect for one year from the date of recording a notice of completion. The District shall have the right to call for such inspection or inspections of the work before the end of the one-year guarantee period and Contractor shall attend and participate in such inspection(s) upon request of the District. This guarantee does not excuse the Contractor from breaches of contract causing defects that occur or are discovered more than one year after the notice of completion. In addition, the warranty and guaranty period for repaired or replaced work or part shall be one year from the date of acceptance of said repaired or replaced work or part, but not less than the remaining warranty period of the original work.

5.7 AUTHORITY OF THE ENGINEER

5.7.1 The Engineer is the representative of the District and has full authority to interpret the Contract Documents, to conduct the construction review and inspection of the Contractor's performance, and to decide questions which arise during the course of the work; and its decisions on these matters shall be final and conclusive. The Engineer has the authority to reject all work and materials that do not conform to the Contract Documents, and has the authority to stop the work whenever such stoppage may be necessary to insure the proper execution of the Contract.

5.7.2 If at any time the Contractor's work force, tools, plant or equipment appear to the Engineer to be insufficient or inappropriate to secure the required quality of work or the proper rate of progress, the Engineer may order the Contractor to increase their efficiency, improve their character, to augment their number or to substitute other personnel, new tools, plant or equipment, as the case may be, and the Contractor shall comply with such order. Neither the failure of the Engineer to demand such increase of efficiency, number, or improvement, nor the compliance by the Contractor with the demand, shall relieve the Contractor of its obligation to provide quality work at the rate of progress necessary to complete the work within the specified time.

5.7.3 The Engineer shall have the authority to make minor changes in the work, not involving extra costs, and not inconsistent with the purposes of the work.

5.7.4 Any order given by the Engineer, not otherwise required by the Contract Documents to be in writing shall, on request of the Contractor, be given or confirmed by the Engineer in writing.

5.7.5 Whenever work, methods of procedure, or any other matters are made subject to direction or approval, such direction or approval will be given by the Engineer.

5.8 DRAWINGS

5.8.1 Drawings furnished herewith are for bidding purposes. The Engineer will furnish the Contractor, free of charge, copies of full-size Drawings which are reasonably necessary for the execution of the work. The Contractor shall have no claim for excusable delay on account of the failure of the Engineer to deliver such Drawings unless the Engineer shall have failed to deliver the same within two weeks after receipt of written demand therefor from the Contractor. If the Contractor, in the course of the work, finds any discrepancy between the Drawings and the physical condition of the locality, or any errors or omissions in the Drawings, or in the layout as given by points and instructions, it shall be its duty to inform the Engineer in writing, and the Engineer will promptly verify the same. Any work done after such discovery, until authorized, will be done at the Contractor's risk. All Drawings, Specifications, and copies thereof furnished by the Engineer are the property of the Engineer and shall not be reused on other work and, with the exception of the signed Contract sets, are to be returned to it, on request, at the completion of the work. All models are the property of the District.

5.8.2 The Contractor shall maintain at the site of work one record copy of the Drawings, in good order, and available to the Engineer. The Contractor shall mark the

Drawings to record all changes and corrections made during construction. The Contractor shall make all corrections and changes on the Drawings as necessary to produce accurate and complete record Drawings showing the "as built" work. Marked Drawings shall be updated at least weekly. The Contractor shall submit to the Engineer a final, complete and accurate set of record Drawings prior to or simultaneously with the Contractor's request for final payment.

5.8.3 The Drawings shall be supplemented by such shop drawings prepared by the Contractor as are necessary to adequately control the work. Contractor shall not make any changes in any shop drawings after they have been reviewed by the Engineer.

5.8.4 Shop drawings for any structure shall include, but not be limited to: stress sheets, anchor bolt layouts, shop details, and erection plans, which shall be reviewed and approved by the Engineer before any such work is performed.

5.8.5 Shop drawings will be required for cribs, cofferdams, falsework, centering and form work and for other temporary work and methods of construction the Contractor proposes to use. Such drawings shall be subject to the review and approval of the Engineer insofar as the details affect the character of the finished work, but details of design will be left to the Contractor who shall be responsible for the successful construction of the work.

5.8.6 Contractor agrees that shop drawings processed by the Engineer are not Contract Change Orders, and that the purpose of shop drawings submitted by the Contractor is to demonstrate to the Engineer that the Contractor understands the design concept, and to demonstrate its understanding by indicating which equipment and material it intends to furnish and by detailing the fabrication methods it intends to use.

5.8.7 It is expressly understood, however, that favorable review of the Contractor's shop drawings shall not relieve the Contractor of any responsibility for accuracy of dimensions and details, or for mutual agreements of dimensions and details. It is mutually agreed that the Contractor shall be responsible for agreement and conformity of its shop drawings with the Specifications. Contractor further agrees that if deviations, discrepancies or conflicts between shop drawings and Specifications are discovered either prior to or after shop drawings are processed by the Engineer, the Specifications shall control and shall be followed.

5.8.8 Unless otherwise stated, the Engineer shall have 30 days from the date of receipt of shop drawings for review.

5.8.9 Full compensation for furnishing all shop drawings shall be considered as included in the prices paid for the Contract items of work to which such drawings relate and no additional compensation will be allowed therefor. Any cost related to the Engineer's review of any particular set of shop drawings more than twice, due to incompleteness or unacceptability, shall be borne by the Contractor, and the District reserves the right to withhold such costs from payments due the Contractor.

5.9 CONSTRUCTION STAKING AND SURVEYS

[Alternate A (by District)]

The District will provide one set of construction stakes and benchmarks as it deems necessary to establish lines and grades required for the completion of the site work specified in the Contract Documents. The Contractor shall notify the Engineer at least two working days in advance of required staking. The Contractor shall make all other surveys necessary for the completion of the work.

Stakes and marks set by the District or Engineer shall be carefully preserved by the Contractor. The Contractor shall be charged for the cost of replacing or restoring the stakes and marks that are destroyed or damaged by its operation. This charge will be deducted from any monies due or to become due to the Contractor under the Contract.

[Alternate B (by Contractor)]

The Engineer will provide the Contractor with drawings showing benchmarks and reference points as it deems necessary to establish lines and grades required for the completion of the site work specified in the Contract Documents. The Contractor shall make or furnish all surveys and set all construction stakes necessary for the completion of the work.

Stakes and marks set by the District or Engineer, if any, shall be carefully preserved by the Contractor. The Contractor shall be charged for the cost of replacing or restoring the stakes and marks that are destroyed or damaged by its operation. This charge will be deducted from any monies due or to become due to the Contractor under the Contract.

5.10 PERMITS AND REGULATIONS

5.10.1 Permits and licenses, of a temporary nature, necessary for the prosecution of the work shall be secured and paid for by the Contractor. Permits, licenses and easements for permanent structures or permanent changes in existing facilities shall be secured and paid for by the District unless otherwise specified.

5.10.2 The Contractor shall give all notices and comply with all laws, ordinances, rules and regulations bearing on the conduct of the work as shown on the plans and described in the Specifications. The Contractor shall promptly notify the Engineer in writing of any specification at variance therewith and any necessary changes shall be adjusted as provided in the Contract for changes in the work. If the Contractor performs any work knowing it to be contrary to such laws, ordinances, rules, and regulations and without such notice to the Engineer, it shall bear all costs arising therefrom.

5.11 CONFORMITY WITH CONTRACT DOCUMENTS

Work and materials shall conform to the lines, grades, cross sections, dimensions and material requirements, including tolerances, shown on Contract Documents. Although

measurement, sampling, and testing may be considered evidence as to such conformity, the Engineer shall be the sole judge as to whether the work or materials deviate from the Specifications and plans, and his decision as to any allowable deviations therefrom shall be final and conclusive.

5.12 COORDINATION & INTERPRETATION OF CONTRACT DOCUMENTS

5.12.1 The Contract Documents are complementary and a requirement occurring in one is as binding as though occurring in all.

5.12.2 In the event of conflict between the Plans and the Specifications, the Specifications shall govern, except that, where items are shown on the Plans and are not specifically included in the Specifications, the Plans shall govern.

5.12.3 Should it appear that the work to be done or any of the matters relative thereto are not sufficiently detailed or explained in the Specifications and Plans, the Contractor shall apply to the Engineer for such further explanations as may be necessary and shall conform to them as part of the Contract. In the event of any doubt or question arising respecting the true meaning of the Specifications and Plans, reference shall be made to the Engineer, whose decision thereon shall be final and conclusive.

5.12.4 In the event of any discrepancy between any Plans and the figures written thereon, the figures shall be taken as correct. Detailed drawings shall prevail over general drawings.

5.12.5 Any reference made in the Specifications or on the Plans to any specification, standard, method, or publication of any scientific or technical society or other organization shall, in the absence of a specific designation to the contrary, be understood to refer to the Specification, standard, method, or publication in effect as of the date that the work is advertised for Bids.

5.13 SUBCONTRACTS

5.13.1 The attention of the Contractor is directed to California Public Contract Code section 4100, et seq., regarding subcontracting and said provisions are by this reference incorporated herein and made a part hereof.

5.13.2 Each subcontract shall contain a suitable provision for the suspension or termination thereof should the work be suspended or terminated or should the subcontractor neglect or fail to conform to every provision of the Contract Documents insofar as such provisions are relevant. No subcontractor or supplier will be recognized as such, and all persons engaged in work will be considered as employees of the Contractor, and the Contractor will be held responsible for their work, which shall be subject to the provisions of the Contract Documents. The Contractor shall be fully responsible to the District for the acts or omissions of its subcontractors and of the persons either directly or indirectly employed by them. Nothing contained in the Contract Documents shall create any contractual relationship between any subcontractor and the District. If a legal action, including arbitration and litigation, against the District is initiated by a subcontractor or supplier, the Contractor shall reimburse the District for

the amount of legal, engineering and all other expenses incurred by the District in defending itself in said action.

5.13.3 The District and the Engineer reserve the right to approve all subcontractors. Such approval shall be a consideration to the awarding of the Contract and unless notification to the contrary is given to the Contractor prior to the signing of the Contract, the list of subcontractors that is submitted with its proposal will be deemed to be acceptable.

5.14 COOPERATION OF CONTRACTORS

5.14.1 Should construction be under way by other forces or by other contractors within or adjacent to the limits of the work specified or should work of any other nature be under way by other forces within or adjacent to said limits, the Contractor shall cooperate with all such other contractors or other forces to the end that any delay or hindrance to their work will be avoided. The right is reserved by the District to perform other or additional work at or near the site (including material sources) at any time, by the use of other forces.

5.14.2 When two or more contractors are employed on related or adjacent work, each shall conduct its operation in such a manner as not to cause any unnecessary delay or hindrance to the other. Each contractor shall be responsible to the other for all damage to work, to persons or property caused to the other by its operations, and for loss caused the other due to its unnecessary delays or failure to finish the work within the time specified for completion.

5.15 SUPERINTENDENCE

5.15.1 The Contractor shall designate in writing before starting work an individual as authorized representative who shall have the authority to represent and act for the Contractor. This authorized representative shall be present at the site of the work at all times while work is actually in progress on the Contract. When work is not in progress and during periods when work is suspended, arrangements acceptable to the Engineer shall be made for any emergency work that may be required.

5.15.2 The Contractor is solely responsible, at all times, for the superintendence of the work and for its safety and progress.

5.15.3 Whenever the Contractor or its authorized representative is not present on any particular part of the work where it may be desired to give direction, orders will be given by the Engineer, which shall be received and obeyed by the superintendent or foreman who may have charge of the particular work in reference to which the orders are given.

5.15.4 Any order given by the Engineer, not otherwise required by the Contract Documents to be in writing, will on request of the Contractor, be given or confirmed by the Engineer in writing.

5.16 INSPECTION OF WORK

5.16.1 Unless otherwise provided, all equipment, materials, and work shall be subject to inspection and testing by the Engineer. The Engineer will observe the progress

and quality of the work and determine, in general, if the work is proceeding in accordance with the intent of the Contract Documents. He shall not be required to make comprehensive or continuous inspections to check the quality of the work, and he shall not be responsible for construction means, methods, techniques, sequences, or procedures, or for safety precautions and programs in connection with the work. Visits and observations made by the Engineer shall not relieve the Contractor of its obligation to conduct comprehensive inspections of the work and to furnish proper materials, labor, equipment and tools, and perform acceptable work, and to provide adequate safety precautions, in conformance with the intent of the Contract.

5.16.2 Whenever the Contractor varies the period during which work is carried on each day, it shall give due notice to the Engineer so that proper inspection may be provided. Any work done in the absence of the Engineer shall be subject to rejection. Proper facilities for safe access for inspection to all parts of the work shall at all times be maintained for the necessary use of the Engineer and other agents of the District, and agents of the Federal, State, or local governments at all reasonable hours for inspection by such agencies to ascertain compliance with laws and regulations.

5.16.3 One or more inspectors may be assigned to observe the work and to act in matters of construction under this Contract. It is understood that inspectors shall have the power to issue instructions and make decisions within the limitations of the authority of the Engineer. Such inspection shall not relieve the Contractor of its obligation to conduct comprehensive inspections of the work, to furnish proper materials, labor, equipment and tools, and perform acceptable work, and to provide adequate safety precautions in conformance with the intent of the Contract.

5.16.4 The Engineer and his representatives shall at all times have access to the work wherever it is in preparation or progress; and the Contractor shall provide safe and convenient facilities for such access and for inspection. If the Specifications, the Engineer's instructions, laws, ordinances, or any public authority require any material, equipment or work to be specifically tested or approved, the Contractor shall give the Engineer timely notice of its readiness for inspection, and if the inspection is by an authority other than the District, of the time fixed for inspection. Inspections by the Engineer will be made promptly and, where practicable, at the source of supply.

5.16.5 Work performed without inspection may be required to be removed and replaced under proper inspection and the entire cost of removal and replacing, including the cost of District-furnished materials used in the work, shall be borne by the Contractor, regardless of whether or not the work exposed is found to be defective. Examination of questioned work, other than that installed without inspection, may be ordered by the Engineer and, if so ordered, the work must be uncovered by Contractor. If such work is found to be in accordance with the Contract Documents, the District will pay the cost of reexamination and replacement. If such work is found to be not in accordance with the Contract Documents, the Contractor shall pay such cost unless it can show that the defect in the work was caused by another contractor, and in that event the District will pay such costs.

5.16.6 The inspection of the work shall not relieve the Contractor of its obligation to fulfill the Contract as herein prescribed, or in any way alter the standard of

performance provided by the Contractor; and defective work shall be made good and unusable materials may be rejected, notwithstanding that such work and materials have been previously overlooked by the Engineer and accepted or estimated for payment. If the work or any part thereof shall be found defective, Contractor shall, within ten (10) calendar days, make good such defect in a manner satisfactory to the Engineer. If the Contractor shall fail or neglect to make ordered repairs of defective work or to remove the condemned materials from the work within ten (10) calendar days after direction by the Engineer in writing, the District may make the ordered repairs, or remove the condemned materials, and deduct the cost thereof from any monies due the Contractor.

5.16.7 The Contractor shall furnish promptly without additional charge all facilities, labor and materials reasonably needed by the Engineer for performing all inspection and tests. Contractor shall be charged with any additional cost of inspection when material and workmanship are not ready at the time specified by the Contractor for its inspection.

5.16.8 Where any part of the work is being done under an encroachment permit or building permit, or is subject to Federal, State, County or City codes, laws, ordinances, rules or regulations, representatives of the government agency shall have full access to the work and shall be allowed to make any inspection or tests in accordance with such permits, codes, laws, ordinances, rules, or regulations. If advance notice of the readiness of the work for inspection by the governing agency is required, the Contractor shall furnish such notice to the appropriate agency.

5.16.9 The Engineer may inspect the production of material, or the manufacture of products at the source of supply. Plant inspection, however, will not be undertaken until the Engineer is assured of the cooperation and assistance of both the Contractor and the material producer. The Engineer or his authorized representative shall have free entry at all times to such parts of the plant as concerns the manufacture or production of the materials. Adequate facilities shall be furnished free of charge to make the necessary inspection. The District assumes no obligation to inspect materials at the source of supply.

5.17 TESTS

The Contractor shall perform at its expense all tests specified or required by the Specifications. The Engineer will perform such tests as he deems necessary to determine the quality of work or compliance with Contract Documents. The Contractor shall furnish promptly without additional charge all facilities, labor, and material reasonably required for performing safe and convenient tests as may be required by the Engineer. All tests by the Engineer will be performed in such a manner as will not unnecessarily delay the work. The Contractor shall not be required to reimburse the District for tests performed by the District or Engineer. If samples of materials are submitted which fail to pass the specified tests, the Contractor shall pay for all subsequent tests.

5.18 REMOVAL OF REJECTED/UNAUTHORIZED WORK AND MATERIALS

5.18.1 All work or materials which have been rejected shall be remedied, or removed and replaced by the Contractor in an acceptable manner and no compensation will be allowed it for such removal, replacement, or remedial work.

5.18.2 Any work done beyond the lines and grades shown on the Plans or established by the Engineer or any extra work done without written authority will be considered as unauthorized work and will not be paid for. Upon order of the Engineer, unauthorized work shall be remedied, removed, or replaced at the Contractor's expense.

5.18.3 Upon failure of the Contractor to comply with any order of the Engineer made under this section, the District may cause rejected or unauthorized work to be remedied, removed, or replaced, and may deduct the costs therefor from any monies due or to become due the Contractor.

5.19 DEDUCTIONS FOR UNCORRECTED WORK.

If the Engineer deems it inexpedient to correct work damaged or not done in accordance with the Contract Documents, an equitable deduction from the Contract price shall be made therefor; and such sum may be withheld by the District from Contractor's payment.

5.20 EQUIPMENT AND PLANTS

5.20.1 Only equipment and plants suitable to produce the quality of work and materials required will be permitted to operate on the project.

5.20.2 Plants will be designed and constructed in accordance with general practice for such equipment and shall be of sufficient capacity to ensure the production of sufficient material to carry the work to completion within the time limit.

5.20.3 The Contractor shall provide adequate and suitable equipment and plants to meet the above requirements, and when ordered by the Engineer, shall remove unsuitable equipment from the work and discontinue the operation of unsatisfactory plants.

5.20.4 The Contractor shall identify each piece of its equipment, other than hand tools, by means of an identifying number plainly stenciled or stamped on the equipment at a conspicuous location, and shall furnish to the Engineer a list giving the description of each piece of equipment and its identifying number. In addition, the make, model number and empty gross weight of each unit of compacting equipment shall be plainly stamped or stenciled in a conspicuous place on the unit. The gross weight shall be either the manufacturer's rated weight or the scale weight.

5.20.5 In the case of termination of this Contract before completion from any cause whatever, the Contractor, if notified to do so by the District, shall promptly remove any part or all of its equipment and supplies from the property of the District. If the Contractor

fails to do so, the District shall have the right to remove such equipment and supplies at the expense of the Contractor.

5.21 CHARACTER OF WORKER

If any subcontractor or person employed by the Contractor or any subcontractor is incompetent or is acting in a disorderly, unlawful, or improper manner, District shall notify the Contractor of its determination in writing. Contractor shall immediately remove the identified subcontractor or employee from the Work, and that person shall not thereafter be employed on the Work. Such removal is an absolute right of District and shall not give rise to any claim for compensation or damages against District, the Engineer or any of their officers, directors, employees or agents.

5.22 SEPARATE CONTRACTS

5.22.1 The District reserves the right to let other contracts in connection with this work. The Contractor shall afford other contractors reasonable opportunity for the introduction and storage of their materials and the execution of their work, and shall properly connect and coordinate its work with the other contractor's work.

5.22.2 If any part of the Contractor's work depends for proper execution or results upon the work of any other contractor, the Contractor shall inspect and promptly report to the Engineer any defects in such work that render it unsuitable for such proper execution and results. The Contractor's failure to inspect and report shall constitute an acceptance of the other contractor's work as fit and proper for the reception of the Contractor's work, except as to defects that may develop in the other contractor's work after the execution of its work. To ensure the proper execution of its subsequent work, the Contractor shall measure work already in place and shall at once report to the Engineer any discrepancy between the executed work and the drawings.

5.23 MATERIALS

5.23.1 Unless otherwise specifically stated in the Specifications, the Contractor shall furnish all materials necessary for the execution and completion of the work. Unless otherwise specified, all materials shall be new and shall be manufactured, handled, and installed in a workmanlike manner to insure completion of the work in accordance with the Contract Documents. The Contractor shall, upon request of the Engineer, furnish satisfactory evidence as to the kind and quality of materials.

5.23.2 Where materials are to be furnished by the District, the type, size, quantity and location at which they are available will be stated in the Contract Documents.

5.23.3 Manufacturers' and suppliers' warranties, guarantees, operating manuals, instruction sheets and parts listed, which are furnished with certain articles or materials incorporated in the work, shall be delivered to the Engineer before final acceptance of the Contract work.

5.24 STORAGE OF MATERIALS; STORAGE AREAS

5.24.1 Articles or materials to be incorporated in the work shall be stored in such a manner as to ensure the preservation of their quality and fitness for the work, and to facilitate inspection.

5.24.2 The Contractor's work and storage areas are limited by the right-of-way lines as indicated on the Plans. The plant facilities are to be installed in property or easements owned by the District as shown on the Plans. The District shall be specifically exempted in any agreement from any liability incurred from the use of private property for construction purposes. The Contractor shall make arrangements and pay for property off-site as required for storage, offices, work assembly areas, etc. The Contractor shall take all responsibility for storage of materials. No equipment for incorporation in the project may be stored in an area subject to flooding.

5.25 TRADE NAMES AND ALTERNATIVES

For convenience in designation in the Specifications and Plans, certain articles or materials to be incorporated in the work may be designated under a trade name or the name of a manufacturer and its catalog information. The use of an alternative article or material that is of equal quality and of the required characteristics for the purpose intended will be permitted, subject to the following requirements:

5.25.1 The burden of proof as to the quality and suitability of alternatives shall be upon the Contractor and it shall furnish all information necessary as required by the Engineer. The Engineer shall be the sole judge as to the quality and suitability of alternative articles or materials and his decision shall be final.

5.25.2 Whenever the Specifications and Plans permit the substitution of a similar or equivalent material or article, no tests or action relating to the approval of such substitute material or article will be made until the request for substitution is made in writing by the Contractor accompanied by complete data as to the equality of the material or article proposed. Such request by the Contractor must be made within thirty-five (35) days after award of Contract.

5.26 CERTIFICATES OF COMPLIANCE

5.26.1 A Certificate of Compliance shall be furnished prior to the use of any materials for which the Specifications require that such a certificate be furnished. In addition, when so authorized in the Specifications, the Engineer may permit the use of certain materials or assemblies prior to sampling and testing if accompanied by a Certificate of Compliance. The Certificate shall be signed by the manufacturer of the material or the manufacturer of assembled materials and shall state that the materials involved comply in all respects with the requirements of the Contract. A Certificate of Compliance shall be furnished with each lot of material delivered to the work and the lot so certified shall be clearly identified in the Certificate.

5.26.2 All materials used on the basis of a Certificate of Compliance may be sampled and tested at any time. The fact that material is used on the basis of a Certificate

of Compliance shall not relieve the Contractor of responsibility for incorporating material in the work which conforms to the requirements of the Contract Documents and any such material not conforming to such requirements will be subject to rejection whether in place or not.

5.26.3 The District reserves the right to refuse to permit the use of material on the basis of a Certificate of Compliance.

5.26.4 The form of the Certificate of Compliance and its disposition shall be as directed by the Engineer.

5.27 CERTIFICATES OF REPORTED COMPLIANCE

5.27.1 The Contractor must comply with the California Air Resources Board Off-Road Diesel Regulation (Title 13 CCR § 2449). In order to be eligible to perform work under this Contract, Contractor must submit to the District copies of valid Certificates of Reported Compliance, as described in section 2449(n), for the fleet selected to perform work under this Contract. If applicable, subcontractors must submit copies of valid Certificates of Reported Compliance, as well. If Contractor does not provide said Certificates, Contractor may not perform work under this Contract.

5.27.2 The California Air Resources Board Off-Road Diesel Regulation applies to all self-propelled offroad diesel vehicles with 25 horsepower or greater and most two-engine vehicles (except on-road two-engine sweepers). This includes vehicles that are rented or leased (rental or leased fleets). If there are changes to such equipment during the course of the Contract, Contractor must submit new Certificates to maintain compliance with this Contract.

5.28 ASSIGNMENT

The Contractor shall not assign the Contract or sublet it as a whole or in part without the written consent of the District, nor shall the Contractor assign any monies due, or to become due to it hereafter, without the prior written consent of the District.

5.29 DISTRICT ENTRY ON WORKSITE; RIGHT TO OPERATE UNSATISFACTORY EQUIPMENT OR FACILITIES

5.29.1 The District may, at any time, and from time to time, during the performance of the work, enter the worksite for the purpose of installing any necessary work by District labor or other contracts, and for any other purpose in connection with the installation of facilities. In doing so, the District shall endeavor not to interfere with the Contractor and the Contractor shall not interfere with other work being done by or on behalf of the District.

5.29.2 The District reserves the right, prior to completion and final acceptance, to occupy, or use, any completed part or parts of the work, providing these areas have been approved for occupancy by the District. The exercise of this right shall in no way constitute an acceptance of such parts, or any part of the work, nor shall it in any way affect the dates and times when progress payments shall become due from the District to the Contractor or in any way

prejudice the District's rights in the Contract, or any bonds guaranteeing the same. The Contract shall be deemed completed only when all the work contracted has been duly and properly performed and accepted by the District.

Prior to such occupancy or use, the District and Contractor shall agree in writing regarding the responsibilities assigned to each of them for payments, security, maintenance, heat, utilities, damage to the work, insurance, the period for correction of the work, and the commencement of warranties required by the Contract Documents.

In exercising the right to occupy or use completed parts of the work prior to the completion thereof, the District shall not make any use which will materially increase the cost to the Contractor, without increasing the Contract amount, nor materially delay the completion of the Contract, without extending the time for completion.

5.29.3 If, following installation of any equipment or facilities furnished by the Contractor, defects requiring correction by the Contractor are found, the District shall have the right to operate such unsatisfactory equipment or facilities and make reasonable use thereof until the equipment or facilities can be shut down for correction of defects without injury to the District.

5.30 LANDS FOR WORK; RIGHTS OF WAY; CONSTRUCTION ROADS; TEMPORARY UTILITY SERVICES

5.30.1 The District will provide the lands, easements, rights of way, and/or encroachment permits necessary or other rights to enter and work on lands necessary for the performance of the work. Other permits and licenses are addressed by section 5.10. Should the Contractor find it advantageous to use any additional land for any purpose whatever, the Contractor shall provide for the use of such land at its expense. The Engineer shall be furnished with a copy of written agreements or otherwise be notified in writing of additional working space which is acquired. Nothing herein contained and nothing marked on the Plans shall be interpreted as giving the Contractor exclusive occupancy of the territory provided by the District. When two or more contracts are being executed at one time on the same or adjacent land in such a manner that work on one contract may interfere with that on another, the Engineer shall decide which contractor shall cease work, and which shall continue, or whether the work on both contracts shall progress at the same time and in what manner; and the decision of the Engineer shall be final and binding. When the territory of one contract is the necessary or convenient means of access for the performance of another contract, such privilege of access or any other reasonable privilege may be granted by the Engineer to the contractor so desiring, to the extent, amount, in the manner, and at the time permitted. No such decision as to the method or time of conducting the work or the use of territory shall be the basis of any claim for delay or damage.

5.30.2 Lands, easements or rights of way to be furnished by the District for construction operations will be specifically shown on the Plans.

5.30.3 The Contractor shall construct and maintain all roads necessary to reach the various parts of the work and for the transportation thereto of construction material

and personnel. The cost of constructing and maintaining such roads shall be borne by the Contractor.

5.30.4 The Contractor shall make its own arrangements for any utility services it may require during the life of this project. The Contractor shall make its own arrangements for telephone service which it will require for its field office.

5.31 PROGRESS SCHEDULE

5.31.1 The Contractor shall submit within 10 days after Date of the Contract a schedule or schedules which shall show the dates at which the Contractor will start and complete the several parts of the work. This schedule shall conform to the completion time specified in the Contract. The Contractor shall review and, if necessary, revise the progress schedule at least once per month, and in any event shall submit a current schedule to the Engineer at his request at any time during the contract period.

The Contractor's timely submittal of complete and accurate initial and updated project schedules is a material requirement of this Contract, and Contractor's failure to comply with this requirement would be a material breach of this Contract that could subject Contractor to all applicable penalties, up to and including termination.

5.31.2 The Engineer shall be advised in advance by the Contractor when any part of the work is scheduled and the days when no work will take place. If the Contractor fails to notify the Engineer in advance of the day or days when no work will be done, the Contractor will be charged the cost of inspection for that day or days and such charges may be deducted from any payment due the Contractor.

5.31.3 When, in the judgment of the Engineer, it is necessary to accelerate any part of the work ahead of schedule, the Contractor shall, when directed, concentrate its efforts on such part of the work.

5.32 COMMENCEMENT AND PROGRESS OF THE WORK AND TIME OF COMPLETION; CONSTRUCTION SEQUENCE

5.32.1 The Contractor shall commence the Work covered by this Contract within fifteen (15) days after date of issuance of Notice to Proceed from the District to proceed with the Work. Work will be considered to have commenced when the Contractor begins ordering materials and equipment or starts site work. The Contractor shall not commence Work or incur any expenses in connection therewith, before it is notified to proceed with the Work. Work on the total project shall be completed within Three hundred and thirty (330) calendar days from the date of the Notice to Proceed. The time allowed for completion includes an allowance for working time lost due to normal inclement weather. A Pre-Construction conference will be scheduled by the Engineer prior to the Contractor starting Work.

5.32.2 The Contractor shall give the Engineer written notice not less than two (2) working days in advance of the actual date on which the Work will be started. The Contractor shall be entirely responsible for any delay in the Work that may be caused by this failure

to give such notice. The Engineer shall have the right to specify the locations where the Contractor shall start and proceed with the Work.

5.32.3 The Contractor shall diligently pursue the Work and complete the Work as specified within the time limits as set forth in the Contract Documents.

5.33 DELAYS

5.33.1 When the Contractor foresees a delay in the prosecution of the Work and, in any event, no later than 24 hours after the occurrence of a delay, the Contractor shall notify the Engineer in writing of the probability of the occurrence and the estimated extent of the delay, and its cause. The Contractor shall take immediate steps to prevent, if possible, the occurrence or continuance of the delay. The Contractor agrees that no claim shall be made for delays that are not called to the attention of the Engineer at the time of their occurrence. Contractor further agrees that Contractor shall not be permitted any additional time for completion of the Work or any additional compensation as a result of delay unless Contractor notifies the Engineer of the delay within the time specified herein.

5.33.2 Non-Excusable Delays - Non-excusable delays in the prosecution of the Work shall include delays which could have been avoided by the exercise of care, prudence, foresight, and diligence on the part of the Contractor or its subcontractors, at any tier level, or suppliers.

5.33.3 Excusable Delays - Excusable delays in the prosecution or completion of the Work shall include delays which result from causes beyond the control of the Contractor and District and which could not have been avoided by the exercise of care, prudence, foresight, and diligence on the part of the Contractor or its subcontractors, at any tier level, or suppliers.

5.33.3.1 Abnormal Delays - Delays caused by a Force Majeure Event shall be considered as excusable delays insofar as they prevent the Contractor from proceeding with at least seventy-five (75) percent of the normal labor and equipment force for at least five (5) hours per day toward completion of the current critical activity item(s) on the latest favorably reviewed progress schedule. Such delays may entitle the Contractor to a no-cost adjustment in the Project schedule as its sole and exclusive remedy.

5.33.3.2 Weather Delays - Should inclement weather conditions or the conditions resulting from weather prevent the Contractor from proceeding with seventy five (75) percent of the normal labor and equipment force engaged in the current critical activity item(s) for a period of at least five (5) hours per day toward completion of such operation or operations, and the crew is dismissed as a result thereof, it shall be deemed a weather delay day.

5.33.3.3 Material Supply Shortages - Upon the submission of satisfactory proof to the Engineer by the Contractor, a Supply Shortage of material may be acceptable as grounds for granting a time extension. A time extension for shortage of material will not be considered for material ordered or delivered late or whose availability is affected by virtue of the mishandling of the procurement. The above provisions apply equally to equipment to be installed in the Work.

5.33.4 Compensable Delays - Compensable delays in the prosecution or completion of the Work shall include delays that occur through no fault of the Contractor and prevent the Contractor from proceeding with at least seventy-five (75) percent of the normal labor and equipment force for at least five (5) hours per day toward completion of the current critical activity item(s) on the latest favorably reviewed progress schedule due one or more of the following cause(s):

a. Delays due solely to the actions and/or inactions of the District.

b. Delays due to differing site conditions as addressed in sections 5.3.14 and 5.51.8.5.

c. Delays due to other Contractors employed by the District who interfere with the Contractor's prosecution of the work as defined above.

No delay shall be compensable unless the claimed event or occurrence delays completion of the Work beyond the contractual completion date or the completion date shown in the accepted initial or updated schedules, and the delay affects a critical activity while such activity is on the critical path.

5.33.5 Concurrent Delays - Concurrent delays are those delay periods when the prosecution of the Work is delayed during the same period of time due to causes from a combination of the delays defined in sections 5.33.2 (Non-Excusable Delays), 5.33.3 (Excusable Delays), or 5.33.4 (Compensable Delays). During such concurrent delay periods, time extensions will be granted in accordance with the sections below in section 5.34; however, the Contractor shall not be compensated for its delay damages as defined in section 5.35, or for any other damages, and the District shall not assess its actual costs as defined in section 5.33.5 (Non-Excusable Delay Extensions).

5.34 EXTENSIONS OF TIME

5.34.1 Non-excusable Delay Extensions - The District may in its sole discretion grant an extension of time for non-excusable delays if the District deems it is in its best interest. If the District grants an extension of time for non-excusable delays, the Contractor agrees to pay the District's actual costs, including charges for engineering, inspection and administration incurred during the extension.

5.34.2 Excusable or Compensable Delay Extensions - If the Contractor is delayed in the performance of its Work as defined in section 5.33.3 (Excusable Delays), or section 5.33.4 (Compensable Delays), then the Contract completion date may be extended by the District for such time that, in the District's and Engineer's determination, the Contractor's completion date will be delayed, provided that the Contractor strictly fulfills the following:

a. The Contractor shall provide notification, in accordance with section 5.33.1 and as otherwise provided by this Contract, and may submit in writing a request for an extension of time to the Engineer stating at a minimum the probable cause of the delay and the number of days being requested. Any Contractor time extension request shall be submitted as a change order request in accordance with the requirements of section 5.3.

b. If requested by the Engineer, the Contractor shall promptly provide sufficient information to the Engineer to assess the cause or effect of the alleged delay, or to determine if other concurrent delays affected the work.

c. Weather Delays. The Contractor will be granted a non-compensable time extension for weather caused delays, pursuant to section 5.33.3.2 (Weather Delays), over and above any allowance provided for in this Contract for weather days or weather delays.

Should the Contractor fail to fulfill any of the foregoing, which are conditions precedent to the right to receive a time extension, the Contractor waives the right to receive a time extension.

During such extension of time, neither extra compensation for engineering, inspection and administration nor damages for delay will be charged to the Contractor. It is understood and agreed by the Contractor and District that time extensions due to excusable or compensable delays will be granted only if such delays involve controlling operations which would prevent completion of the whole work within the specified Contract time.

Should the Contractor fail to complete the work within the time specified in the Contract, as extended in accordance with this clause if appropriate, the Contractor shall pay to the District liquidated damages in accordance with section 5.39.

5.35 DELAY DAMAGES

5.35.1 Indirect Overhead - The Contractor shall be reimbursed for indirect overhead expenses for periods of time when the work is delayed as defined in section 5.33.4 (Compensable Delays). However, no reimbursement for indirect overhead or any other costs or damages shall be made for compensable delays which occur during a concurrent delay as defined in section 5.33.5 (Concurrent Delays). No reimbursement for indirect overhead as covered in this section shall be made for any time extensions granted for Contract change orders as provided in section 5.5. As a condition precedent to any reimbursement, the Contractor must fulfill all conditions as provided in section 5.34.2 (Excusable or Compensable Delays). No additional markup for overhead or profit shall be provided for such indirect overhead expenses.

Payment to the Contractor for indirect overhead expenses will be made only if the extended Contract period granted for the compensable delay(s) is required to complete the Work following the depletion of the original contract period and any time extensions granted other than compensable time extensions. Except as provided herein, the Contractor shall have no claim for damage or compensation for any delay including not limited to extended field costs, extended home office overhead costs, impact, inefficiency, unabsorbed home office overhead, under-absorbed home office overhead, hindrance, disruption, or any other damage arising from delay, no matter how characterized, including delay claims of its subcontractors/suppliers of every tier.

5.35.1.1 Indirect Field Overhead - For those allowable delay periods as defined in section 5.35.1 (Indirect Overhead), the Contractor shall be reimbursed for its indirect field overhead based on:

a. Invoices for all field office equipment.

b. Actual salary for field office staff.

c. Fair rental values acceptable to the Engineer for construction equipment idled due to the delay.

5.35.1.2 Indirect Home Office Overhead - For those allowable delay periods as defined in section 5.35.1 (Indirect Overhead), the Contractor shall be reimbursed for its daily home office overhead based on the following formula:

Contract Bid Price ($) ÷ Contract Period (Days) x (0.04) = Daily Home Office Overhead ($/Day).

As it is impractical to determine the actual home office overhead, such reimbursement shall be mutually agreed between the District and Contractor to encompass full payment for any home office overhead expenses for such periods of time for the Contractor and all subcontractors. The Contractor agrees to indemnify, defend and hold the District harmless for any indirect overhead claims from its subcontractors.

5.36 SUSPENSION OF WORK

5.36.1 The Engineer may at any time, by notice in writing to the Contractor, suspend any part of the work for such period of time with or without cause, and the Contractor shall have no claim for damages or additional compensation on account of any such suspension.

5.36.2 Upon receipt of a written notice to suspend any portion of the work issued by the Engineer, the Contractor shall thereupon discontinue all work suspended except for all operations necessary to prevent loss or damage to work already executed as may be directed by the Engineer. In the event a part of the work is suspended, the Contractor, if the suspension is not through its fault or the fault of its subcontractors or agents, shall be paid in accordance with section 5.3.9 for costs of work performed in accordance with such orders of the Engineer during such suspension, provided that this shall not include any cost pertaining to work not suspended by the notice to suspend work. Work shall be resumed by the Contractor after such suspension on subsequent written notice to resume work from the District. In the event of suspension of the entire work by the District, the Contractor, if the suspension is not through the fault of the Contractor or the fault of its subcontractors or agents, shall be paid the sum of $50 for each calendar day during which the entire work shall have been suspended. Said sum is hereby mutually agreed upon as fixed and liquidated damages in full settlement of all costs and expenses, losses and damages resulting to the Contractor from such suspension.

5.36.3 In the event of any suspension of the work in whole or in part under subsection 5.36.2, if the suspension is not through the fault of the Contractor or the fault of

its subcontractors or agents, the Contractor shall be entitled to an extension of time wherein to complete the work to the extent of the delay caused the Contractor thereby. If no agreement can be reached as to the time for extension, the Contractor shall submit a claim to the District within fifteen (15) days of a notice from the District that no agreement can be reached. The claim shall be processed in accordance with section 5.5.

5.36.4 In the event the entire work shall be suspended by order of the District, and shall remain so suspended for a period of ninety (90) consecutive days, through no fault of the Contractor or its subcontractors or agents, and notice to resume the work shall not have been served on the Contractor, Contractor may, at its option, by written notice to the District, terminate the Contract in the same manner and on the same terms as if the termination had been initiated by the District pursuant to section 5.37, and the District shall have no claim for damages because of such termination of the Contract.

5.37 TERMINATION FOR DEFAULT; DAMAGES FOR DELAY; TIMELY EXTENSION

5.37.1 Subject to prior notice from the District and the Contractor's cure rights set forth in this section, the District will have the right to terminate the Contract for cause and/or the Contractor's right to proceed with the work upon the occurrence of any of the following:

a. Contractor becomes insolvent or files for relief under the bankruptcy laws of the United States.

b. Contractor makes a general assignment for the benefit of its creditors or fails to pay its debts as the same become due.

c. A receiver is appointed to take charge of Contractor's property.

d. The work is not completed within the applicable Contract time, as such Contract time may be adjusted in accordance with this Contract, and Contractor is not diligently prosecuting the completion or correction of the work.

e. Contractor persistently or repeatedly refuses or fails to supply skilled supervisory personnel, an adequate number of properly skilled workers, proper materials, or necessary equipment to prosecute the work in accordance with the Contract Documents.

f. Contractor fails to make prompt payment of amounts properly due subcontractors after receiving payment from District.

g. Contractor disregards applicable laws, regulations or other governmental requirements.

h. Contractor persistently or materially fails to execute the work in accordance with the Contract Documents.

i. Contractor persistently or materially fails to comply with applicable safety requirements.

j. Contractor abandons the work.

k. Contractor is in default of any other material obligation under the Contract Documents.

5.37.2 Upon the occurrence of any of the preceding events, District will have the right to terminate the Contract for cause and/or the Contractor's right to proceed with the work if Contractor fails to promptly commence to cure such default and diligently prosecutes such cure within 5 days after notice from District, or within such longer period of time as is reasonably necessary to complete such cure.

5.37.3 The rights and remedies of the District provided in this section are in addition to any of the rights and remedies provided by law or under this Contract.

5.37.4 In addition to the District's rights under this section, if at any time before completion of the work under the Contract, it shall be determined by the District that it is advisable for it, for whatever reason, to terminate the work, it may do so upon ten (10) days written notice to the Contractor. Upon service of such notice of termination, the Contractor shall discontinue the work in such manner, sequence, and at such times as the Engineer may direct. The Contractor shall have no claim for damages for such discontinuance or termination, nor any claim for anticipated profits on the work thus dispensed with or uncompleted, nor any other claim except for the work actually performed up to the time of termination, including any extra work ordered by the Engineer to be done, nor for any claim for liquidated damages in accordance with the provisions of section 5.36.

5.37.5 Upon receipt of notice of termination of the Contract and/or the Contractor's right to proceed with the work under this section 5.37, the Contractor shall, unless the notice directs otherwise, do the following:

a. Immediately discontinue the work to the extent specified in the notice.

b. Place no further orders or subcontracts for materials, equipment, services, or facilities, except as may be necessary for completion of such portion of the work as is not discontinued.

c. Promptly cancel, on the most favorable terms reasonably possible, all orders and subcontracts to the extent they relate to the performance of the discontinued portion of the work.

d. Thereafter do only such work as may be necessary to preserve and protect work already in progress and to protect materials, plants, and equipment on the project site or in transit thereto.

Upon termination of the Contract, the obligations of the Contract shall continue as to portions of the work already performed and, subject to the Contractor's obligations under this section 5.37, as to bona fide obligations assumed by the Contractor prior to the date of termination.

Upon termination of the Contract or the Contractor's right to proceed with the work, the District shall pay to the Contractor the sum of the following:

a. The amount of the Contract price allocable to the portion of the work properly performed by the Contractor as of the date of termination, less sums previously paid to the Contractor.

b. Plus previously unpaid costs of any items delivered to the project site that were fabricated for subsequent incorporation into the work.

c. Plus any proven losses with respect to materials and equipment directly resulting from such termination.

d. Plus reasonable demobilization costs.

e. Plus reasonable costs of preparing a statement of the aforesaid costs, expenses, and losses in connection with such termination.

The above payment shall be the sole and exclusive remedy to which the Contractor is entitled in the event of termination of the Contract by the District and/or the Contractor's right to proceed with the work pursuant to this section 5.37; and the Contractor will be entitled to no other compensation or damages and expressly waives same. The District shall have the right to subtract from the above payment such sums as may be deducted consistent with the terms of the Contract Documents.

5.38 RIGHTS OF DISTRICT UPON TERMINATION

5.38.1 In the event the right of the Contractor to proceed with the work, or any portion thereof, has been terminated because of the fault of the Contractor and the Contractor has been given five (5) days' notice to cure such fault and has not done so, the District may take over the work and prosecute the same to completion by contract or any other method the District deems expedient, and may take possession of and utilize in completing the work such materials, appliances, equipment and plant as may be on the site of the work and necessary therefor. Whether or not the Contractor's right to proceed with the work is terminated, it and its sureties shall be liable for all damages, including but not limited to, costs of managerial and administrative services, engineering, legal and other consultant fees, sustained or incurred by the District in enforcing the provisions of section 5.37 and in completing or causing to complete the Contract work.

5.38.2 Upon termination, the Contractor shall not be entitled to receive any further payment until the work is finished. If upon completion of the work the total cost to the District, including, but not limited to, engineering, legal and other consultant fees, costs of managerial and administrative services, construction costs and liquidated damages, shall be less than the amount which would have been paid if the work had been completed by the Contractor in

accordance with the terms of the Contract, then the difference shall be paid to the Contractor in the same manner as the final payment under the Contract. If the total cost incurred by the District on account of termination of the Contractor and subsequent completion of the work by the District by whatever method the District may deem expedient shall exceed said amount which the Contractor would otherwise have been paid, the Contractor and its sureties shall be liable to the District for the full amount of such excess expense.

5.38.3 The rights and remedies of the District provided in this section are in addition to any of the rights and remedies provided by law or under this Contract.

5.39 FAILURE TO COMPLETE THE WORK IN THE TIME AGREED UPON; LIQUIDATED DAMAGES

5.39.1 It is agreed by the parties to the Contract that time is of the essence; and that in case all the work is not completed before or upon the expiration of the time limit as set in the Bid, Contract and/or Progress Schedule as designated by the District (Generally the date of final completion), or as revised by any time extensions that may have been granted, damage will be sustained by the District; and that it may be impracticable to determine the actual amount of damage by reason of such delay; and it is, therefore, agreed that the Contractor shall pay to the District as damages the amount of $_____500.00_ liquidated damages amount] per day for each and every day's delay in finishing the work in excess of the number of days specified. The parties expressly agree that this liquidated damage clause is reasonable under the circumstances existing at the time the Contract was made. The District shall have the right to deduct the amount of liquidated damages from any money due or to become due the Contractor.

5.39.2 Notwithstanding the above, the parties expressly agree that the liquidated damages specified above do not include the District's legal, engineering, inspection, superintendence and other similar expenses. Accordingly, the District shall have the right to charge to the Contractor and to deduct from the final or progress payments for the work the actual cost to the District of legal, engineering, inspection, superintendence, loss of revenue due to water delivery interruptions, and other expenses, which are directly chargeable to the Contract and which accrue during the period of such delay, except that the cost of final inspection and preparation of the final estimate shall not be included in the charges.

5.39.3 Notwithstanding the provisions of section 5.39.1, the Contractor shall not be liable for liquidated damages or delays caused by the removal or relocation of utilities when such removal or relocation is the responsibility of the District or the owner of the utility under California Government Code section 4215.

5.40 CLEAN UP

5.40.1 During the progress of the work, the Contractor shall maintain the site and related structures and equipment in a clean, orderly condition and free from unsightly accumulation of rubbish. Upon completion of work and before the final estimate is submitted, the Contractor shall at its own cost and expense remove from the vicinity of the work all plants, buildings, rubbish, unused work materials, concrete forms, and temporary bridging and other like materials, belonging to it or used under its direction during the construction; and in the event of its

failure to do so, the same may be removed by the District after ten (10) calendar days' notice to the Contractor, such removal to be at the expense of the Contractor. Where the construction has crossed yards or driveways, they shall be restored by the Contractor to the complete satisfaction of the Engineer, at the Contractor's expense.

5.40.2 The Contractor shall dispose of all testing or disinfection water without damage to property, and all in accordance with applicable regulations. All chlorinated water shall be dechlorinated prior to discharge.

5.41 COMPLIANCE WITH LAWS; PERMITS; TAXES

Contractor is an independent contractor and shall at its sole cost and expense do the following: comply with all laws, rules, ordinances and regulations of all federal, state and local agencies having jurisdiction over the work; procure all permits and licenses, pay all charges and fees, and give all notices necessary and incident to the lawful prosecution of the work; pay all federal, state and local taxes, including manufacturers' taxes, sales taxes, use taxes, processing taxes, and payroll, wage, insurance, social security, and unemployment taxes on wages, salaries or any remuneration paid to Contractor's employees, whether levied under existing or subsequently enacted laws, rules or regulations; and pay all property tax assessments on materials or equipment used until acceptance by the District. If any discrepancy or inconsistency is discovered in the Plans or Specifications, or in this Contract in relation to any such law, rule, ordinance, regulation, order or decree, the Contractor shall forthwith report the same to the Engineer in writing. The Contractor shall also protect, defend, hold harmless and indemnify the District, the Engineer, and all of the District's officers, directors, agents, and employees against any claim or liability arising from or based upon the violation of any such law, rule, ordinance, regulation, order or decree, whether by the Contractor itself or by its employees. Particular attention is called to the following:

5.41.1 Contractor is responsible for the safety of its workers and Contractor shall comply with, and require its workers to comply with, all applicable federal and state worker and job site safety-related laws and regulations, including, but not limited to, applicable federal Department of Labor, Occupational Safety and Health Administration ("OSHA") regulations and California Department of Industrial Relations (including the Division of Occupational Safety and Health and Occupational Safety and Health Standards Board ("Cal/OSHA")) regulations and safety orders.

5.41.2 The Contractor, upon request, shall furnish evidence satisfactory to the District and Engineer that any or all of the foregoing obligations have been or are being fulfilled. The Contractor warrants to the District that it is licensed by all applicable federal, state and local governmental bodies to perform this Contract and will remain so licensed throughout the progress of the work, and that it has, and will have, throughout the progress of the work, the necessary experience, skill and financial resources to enable it to perform this Contract.

5.41.3 The Contractor shall comply in all respects with the requirements of AB 5 (Labor Code section 3351 and Unemployment Insurance Code sections 606.5 and 621), and is solely responsible for such compliance and the costs thereof. The Contractor shall indemnify, hold harmless and defend the Agency against any claims, demands or

damages of any workers or entity arising out of Contractor's failure to comply in all respects with the requirements of AB 5.

5.42 PREVAILING WAGE PENALTIES; WAGE CLAIMS PROHIBITED

5.42.1 The Contractor shall forfeit as penalty to the District not more than the sum of two hundred dollars ($200) and not less than forty dollars ($40) for each calendar day or portion thereof for each worker (whether employed by the Contractor or subcontractor) paid less than the stipulated prevailing rates for any work done under the Contract in violation of the provisions of the California Labor Code and in particular, sections 1772 to 1780. The amount of this penalty shall be determined by the Labor Commissioner and shall be based on consideration of the contractor's mistake, inadvertence, or neglect in failing to pay the correct rate of prevailing wages, the previous record of the contractor in meeting its prevailing wage obligations, and a contractor's willful failure to pay the correct rates of prevailing wages. A mistake, inadvertence, or neglect in failing to pay the correct rate of prevailing wages is not excusable if the contractor had knowledge of its obligations under Labor Code sections 1720, et seq. In addition to the aforementioned penalty, each worker shall be paid the difference between the prevailing wage rate and the amount paid to each worker for each calendar day or portion thereof for which said worker was paid less than the prevailing wage.

5.42.2 The District will not recognize any claims for additional compensation because of the payment of the wages set forth in the Contract Documents. The possibility of wage increases is one of the elements to be considered by the Contractor in determining its Bid, and will not under any circumstances be considered as the basis of a claim against the District or the Engineer.

5.43 LABOR DISCRIMINATION

Attention is directed to California Labor Code section 1735 which is applicable to the work under this Contract and which reads as follows: "A contractor shall not discriminate in the employment of persons upon public works on any basis listed in subdivision (a) of section 12940 of the Government Code, as those bases are defined in sections 12926 and 12926.1 of the Government Code, except as otherwise provided in section 12940 of the Government Code. Every contractor for public works who violates this section is subject to all the penalties imposed for a violation of this chapter."

5.44 EIGHT HOUR DAY LIMITATION; CERTIFIED PAYROLL REPORTS

5.44.1 In accordance with the provisions of the California Labor Code, and in particular, sections 1810 to 1815, eight hours labor shall constitute a day's work, and no worker, in the employ of the Contractor, or any subcontractor, doing or contracting to do any part of the work contemplated by this Contract, shall be required or permitted to work more than eight (8) hours in any one calendar day and forty (40) hours in any one calendar week in violation of those provisions; provided that subject to Labor Code section 1815, a worker may perform work

in excess of either eight (8) hours per day or forty (40) hours during any one week upon compensation for all hours worked in excess of eight (8) hours per day or forty (40) hours during any one week at not less than one and one half times the basic rate of pay. Except as just provided, the Contractor shall forfeit as a penalty to the District the sum of twenty-five dollars ($25) for each worker employed in the performance of this Contract by it or by any subcontractor under it for each calendar day during which such worker is required or permitted to labor more than eight (8) hours in any one calendar day and forty (40) hours in any one calendar week in violation of sections 1810 through 1815.

5.44.2 The Contractor shall comply in all respects with the provisions of Labor Code section 1776, whose provisions are incorporated herein by this reference. In accordance with section 1776, the Contractor and each subcontractor shall keep an accurate record showing the names, addresses, social security numbers, work classifications, and straight time and overtime hours worked each day and week, and the actual per diem wages paid to each journeyman, apprentice, worker, or other employee employed by it in connection with the work specified therein, which record shall be open at all reasonable hours at the principal office of the Contractor to the inspection of the District, State and Federal officers and agents. Certified copies of the payroll records shall be furnished or made available for inspection to others as provided in section 1776. These payroll records shall be certified and shall be on forms provided by the State Division of Labor Standards Enforcement, or shall contain the same information as the forms provided by the Division. The Contractor shall file a certified copy of the payroll records with the entity that requested the records within 10 days after receipt of a written request. Any copy of records made available for inspection as copies and furnished upon request to the public or any public agency by the District, the Division of Apprenticeship Standards, or the Division of Labor Standards Enforcement shall be marked or obliterated in a manner so as to prevent disclosure of an individual's name, address, and social security number. The name and address of the Contractor shall not be marked or obliterated. The Contractor shall inform the District of the location of the payroll records, including the street address, city and county, and shall, within five working days, provide a notice of a change of location and address. The Contractor shall have 10 days in which to comply subsequent to receipt of written notice specifying in what respects the Contractor must comply with this section. In the event that the Contractor fails to comply with the 10-day period, he or she shall, as a penalty to the District, forfeit one hundred dollars ($100) for each calendar day, or portion thereof, for each worker, until strict compliance is effectuated. Upon the request of the Division of Apprenticeship Standards or the Division of Labor Standards Enforcement, these penalties shall be withheld from progress payments then due.

5.45 EMPLOYMENT OF APPRENTICES

The Contractor's attention is directed to California Labor Code sections 1777.5, 1777.6 and 1777.7 pertaining to employment of indentured apprentices, which are hereby incorporated by reference into this Contract. As applicable, the Contractor or any subcontractor employed by it in the performance of the Contract work shall take such actions as necessary to comply with the provisions of sections 1777.5, 1777.6 and 1777.7.

5.46 WATER POLLUTION

5.46.1 The Contractor shall exercise every reasonable precaution to protect streams, lakes, reservoirs, and canals from pollution with fuels, oils, bitumens, calcium chloride, and other harmful materials and shall conduct and schedule its operations so as to avoid or minimize muddying and silting of said streams, lakes, reservoirs, and canals. Care shall be exercised to preserve vegetation beyond the limits of construction. The Contractor shall comply with California Fish and Game Code section 5650 and all other applicable statutes and regulations relating to the prevention and abatement of water pollution.

5.46.2 For projects that are subject to the NPDES general permit for stormwater discharges from construction activities, including the following provisions: State Water Resources Control Board ("SWRCB") Order No. 2009-0009-DWQ (NPDES No. CAS000002), National Pollutant Discharge Elimination System (NPDES) General Permit for Storm Water Discharges Associated with Construction and Land Disturbance Activities (the "NPDES Permit") requires the District to implement a the Storm Water Pollution Prevention Plan for the Project ("SWPPP"). The Contractor will have day-to-day responsibility for implementing the SWPPP and for ensuring compliance with all of its requirements. This section and its subdivisions outline the responsibilities of the District and the Contractor to comply with the NPDES Permit and to implement the SWPPP, and allocate liability for violations of the permit and the SWPPP. The Contractor also is referred to the Specifications for a copy of the SWPPP for the work and any more specific requirements concerning its implementation.

5.46.2.1 The District will designate a Legally Responsible Person ("LRP"), who shall prepare and file all required documents with the SWRCB and the applicable regional water quality control board regarding the NPDES Permit and SWPPP, including the permit registration documents and any required annual or other reports. The Contractor and its subcontractors, suppliers, agents and affiliates will cooperate with and respond immediately to any inquiry or request for information from the District's LRP, timely turn in all reports required by the SWPPP, and cooperate with the LRP in the preparation and filing of all relevant documents and reports related to NPDES Permit and SWPPP compliance.

5.46.2.2 The District will designate a Qualified SWPPP Developer ("QSD"), who will be employed by the District or the Engineer to develop a SWPPP for the work that complies with the requirements of the NPDES Permit. The District will provide the SWPPP to the Contractor by no later than the date the notice to proceed is issued. The Contractor shall review the SWPPP and certify that it has reviewed and will implement and comply with it while performing the work. Such certification will be completed and signed as part of the package the Contractor executes and returns to the District accepting the award of the Contract.

5.46.2.3 The District or the Engineer has a Qualified SWPPP Practitioner ("QSP") on staff that is authorized to act on behalf of the District. At all times during the Contract period, the Contractor also will have at least one person assigned to the work who is a certified QSP who is familiar with the SWPPP for the work and the general requirements of the NPDES Permit. The District's QSP will oversee the implementation of the SWPPP and be available to consult with the Contractor's QSP on any issues that arise in regard to SWPPP implementation and compliance. The Contractor's designated QSP will have day-to-day

responsibility the Contractor's implementation of the SWPPP and for ensuring compliance with all of its requirements by Contractor's personnel, subcontractors, suppliers, agents and affiliates.

5.46.2.4 In performing the work, it shall be the Contractor's responsibility to timely and completely implement and comply with all requirements of the SWPPP, including without limitation, control of all pollutants and their sources, implementation of all site and stabilization BMPs, and preparation of all information and documentation required by the District and the NPDES Permit to fully comply with all obligations under the SWPPP. To the extent necessary, the Contractor shall ensure that all subcontractors, suppliers, agents and affiliates involved in any portion of the work affected by the SWPPP also comply with its provisions and requirements.

5.46.2.5 The Contractor will keep at least one copy of the SWPPP on the worksite at all times and shall make it readily available for review and use by Contractor's personnel, subcontractors, suppliers, agents and affiliates. The Contractor also will make the worksite copy of the SWPPP immediately available for inspection by the District, the Engineer and any state or local inspector that has jurisdiction over the work and/or the SWPPP.

5.46.2.6 To the extent permitted by law, the Contractor shall indemnify, defend (with counsel approved by District) and hold harmless the District, and its directors, officers, employees, volunteers, and agents from and against any and all actions, judgments, legal or administrative proceedings, arbitrations, claims, damages, liabilities, attorney's fees, fines, penalties, losses, costs and expenses regardless of nature or type, arising out of, pertaining to or in any way connected with the negligence, recklessness or willful misconduct of Contractor or its employees, agents, or subcontractors, suppliers or affiliates, or the agent, employee or subcontractor of any one of them, in the implementation of and compliance with the SWPPP, except where caused by the sole negligence or willful misconduct of the District or as otherwise limited by law. The provisions of this indemnification provision, including Contractor's liability for any civil or criminal fines and penalties that may be assessed after the completion of the work by a regional water quality control board or other regulatory body, shall survive the completion of the services under, or the termination of, this Agreement.

5.46.2.7 The Contractor's failure to implement the SWPPP, to comply with its requirements or to provide any form of information or assistance to the District as outlined in this section shall be deemed a material breach of the Contract Documents and may grounds for termination of the Contract for cause in accordance with section 5.37 of these General Conditions.

5.47 PATENTS

The Contractor shall assume all costs arising from the use of patented materials, equipment, devices, or processes used on or incorporated into the work, and agrees to indemnify, defend, protect and save harmless the District, the Engineer, and all of their officers, directors, employees, and other representatives, from all suits at law, or actions of every nature for, or on account of, the use of any patented materials, equipment, devices, or processes.

5.48 USE OF ARTIFICIAL INTELLIGENCE

5.48.1 Pursuant to the terms, conditions, and limitations set forth in this section, Contractor may use artificial intelligence systems or tools, including machine learning algorithms, natural language processing, and other artificial intelligence technologies (collectively "AI"), to complete the Work and all related obligations under this Contract. The Contractor shall ensure all uses of AI performed within this Contract shall be to the benefit of the District and will not be used in any way that could harm the District. Contractor shall be fully responsible for the performance of its obligations under this Contract, and the use of any AI systems shall not in any manner relieve Contractor of such responsibility.

5.48.2 Prior to using any AI in its performance of the Work and all related obligations under this Contract, Contractor shall advise District in writing of its intent to use AI and shall keep District informed of such usage throughout the term of the Contract. During the term of this Contract, District may request, and Contractor shall provide, District with all information regarding its use of AI in its performance of this Contract. Contractor shall keep and maintain all such records that pertain to its use of AI in its performance of this Contract in compliance with section 5.74.

5.48.3 Contractor shall review any AI-generated data, information, or AI-informed decisions relating in any manner to the performance of the Work and all related obligations under this Contract to ensure that such work product is to the standard promised to District in this Contract. This quality-assurance review of AI-generated work and materials shall be conducted by a qualified Contractor employee or subcontractor. Contractor shall conduct ongoing testing and review of all AI systems used in the performance of this Contract to ensure they function as intended and do not negatively impact the quality and accuracy of the Work or divulge any proprietary or confidential information of District or its officer, employees, or agents. Contractor shall ensure that its officers, employees, and agents are properly trained to both use AI and to assess and mitigate any potential negative consequences from its use.

5.48.4 Contractor shall indemnify, defend, protect, and hold harmless District and its Indemnitees from and against any claims that arise out of, pertain to, or relate to the Contractor's use of AI. Contractor's obligations shall survive the termination of, or completion of Work under, this Contract.

5.49 PUBLIC CONVENIENCE

5.49.1 This section defines the Contractor's responsibility with regard to convenience of the public and public traffic in connection with its operations.

5.49.2 The Contractor shall conduct its operations as to offer the least possible obstruction and inconvenience to the public; and it shall have under construction no greater length or amount of work than it can prosecute properly with due regard to the rights of the public.

5.49.3 Unless otherwise provided in the Contract Documents, all public traffic shall be permitted to pass through the work with as little inconvenience and delay as possible.

5.49.4 Spillage resulting from hauling operations along or across any publicly traveled way shall be removed immediately by the Contractor at its expense.

5.49.5 Construction operations shall be conducted in such a manner as to cause as little inconvenience as possible to abutting property owners.

5.49.6 Convenient access to driveways, houses and buildings along the line of the work shall be maintained and temporary approaches to crossings or intersecting highways shall be provided and kept in good condition. When the abutting property owner's access across the right of way line is to be eliminated, or to be replaced under the Contract by other access facilities, the existing access shall not be closed until the replacement access facilities are usable.

5.49.7 Water shall be supplied at Contractor's expense if ordered by the Engineer for the alleviation or prevention of dust nuisance as provided in the Contract Documents.

5.49.8 In order to expedite the passage of public traffic through or around the work, the Contractor shall install signs, lights, flares, barricades, and other facilities for the sole convenience and direction of public traffic. Also, the Contractor shall provide and station competent flag persons whose sole duties shall consist of directing the movement of public traffic through or around the work. The cost of furnishing and installing such signs, lights, flares, barricades, and other facilities, and the cost of providing and stationing such flag persons, all for the convenience and direction of public traffic, will be considered as included in the Contract price and no additional compensation will be allowed.

5.49.9 Flagpersons and guards, while assigned to traffic control, shall perform their duties and shall be provided with the necessary equipment in accordance with the current "Instructions to Flagmen" of the California Department of Transportation. The equipment shall be furnished and kept clean and in good repair by the Contractor at its expense.

5.50 UNDERGROUND UTILITIES

Prior to conducting any excavation, the Contractor shall contact the appropriate regional notification center as required by and shall otherwise comply with California Government Code section 4216, et seq. In accordance with Government Code section 4215, the Contractor shall be compensated for the costs of locating, repairing damage not due to the failure of the Contractor to exercise reasonable care, and removing or relocating existing main or trunkline utility facilities not indicated in the Contract Plans and Specifications with reasonable accuracy, and for the equipment on the project necessarily idled during such work; provided that the Contractor shall first notify the Engineer before commencing work on locating, repairing damage to, removing or relocating such utilities.

5.51 SAFETY AND TRENCHING

5.51.1 The Contractor shall be solely and completely responsible for the conditions of the job site, including safety of all persons and property during performance of the work. This requirement shall apply continuously and not be limited to normal working hours. Safety procedures and practices shall conform to all applicable Federal, State, and local laws, ordinances, and codes, and to the rules and regulations established by OSHA and Cal/OSHA, and

to other rules of law applicable to the work. Any District obligations relating to safety of the work are separate from and do not alter the Contractor's primary responsibility for safety as provided in this Contract.

5.51.2 The Contractor shall have an Injury/Illness Prevention Program ("IIPP") in place to protect the safety of its employees and ensure that its subcontractors also have an IIPP or comply with Contractor's program. The Contractor's IIPP shall comply with and be at least as effective as the requirements of section 3203 of Title 8 of the California Code of Regulations. The Contractor and subcontractors must implement all requirements of the IIPP regulation, unless they can demonstrate that they are exempt from certain specific provisions in the regulation. The Contractor shall submit a copy of its IIPP to the District prior to any work being performed on District property.

5.51.3 The services of the Engineer in conducting construction review of the Contractor's performance is not intended to include review of the adequacy of the Contractor's work methods, equipment, bracing or scaffolding or safety measures, in, on, or near the construction site, and shall not be construed as supervision of the actual construction nor make the Engineer responsible for providing a safe place for the performance of work by the Contractor, subcontractors, or suppliers; or for access, visits, use work, travel or occupancy by any person. Contractor is responsible for ensuring that safety of their equipment, means and methods are within safe practices as required by regulatory agencies. Employers who directly employ workers exposed to a hazard; employers who create a hazard; employers who are responsible for controlling worksite safety and health conditions, and who have the authority to ensure that a hazard is corrected; and employers who have the responsibility to correct a hazard are responsible for ensuring the health and safety of employees, including other employers' employees, as per Title 8, CCR, Section 336.10.

5.51.4 If Contractor is to complete work in a confined space, as defined in section 5158 of Title 8 of the California Code of Regulations, Contractor must have a Confined Space Entry Program that complies with the requirements of Sections 5156-5158 of Title 8 of the California Code of Regulations.

5.51.5 All work and materials shall be in strict accordance with all applicable State, Federal and local laws, rules, regulations, and codes. The Contractor shall carefully instruct all personnel working in potentially hazardous work areas as to potential dangers and shall provide such necessary safety equipment and instruction as is necessary to prevent injury to personnel and damage to property. Special care shall be exercised relative to electrical work, work involving excavation and in pump sump work.

5.51.6 Nothing in this Contract is to be construed to permit work not conforming to governing law. When Contract Documents differ from governing law, the Contractor shall furnish and install the higher standards called for without extra charge. All equipment furnished shall be grounded and provided with guards and protection as required by applicable federal and state safety regulations and orders.

5.51.7 Shoring and Trench Safety Plan Attention is directed to California Civil Code section 832 relating to lateral and subjacent support, and the Contractor shall comply with this law.

5.51.8 In accordance with California Labor Code section 6705, if the total amount of the contract is in excess of $25,000 and if the work involves the excavation of any trench or trenches five feet or more in depth, the Contractor shall submit to the District for acceptance, in advance of excavation, a detailed plan showing the design of shoring, bracing, sloping, or other provisions to be made for worker protection from the hazard of caving ground during the excavation of any such trench or trenches.

5.51.8.1 In accordance with California Labor Code section 6705, if the total amount of the contract is in excess of $25,000 and if the work involves then excavation of any trench or trenches five feet or more in depth, the Contractor shall submit to the District for acceptance, in advance of excavation, a detailed plan showing the design of shoring, bracing, sloping, or other provisions to be made for worker protection from the hazard of caving ground during the excavation of any such trench or trenches.

5.51.8.2 The District or the Engineer or their consultants may have made investigations of subsurface conditions in areas where the work is to be performed. If so, these investigations are identified in the Contract Documents and the records of such investigations are available for inspection at the office of the Engineer. The detailed plan showing the design of shoring, etc., which the Contractor is required to submit to the District for acceptance of excavation will be not accepted by the District if the plan is based on subsurface conditions which are more favorable than those revealed by the investigations made by the District or the Engineer or their consultants; nor will the plan be accepted if it is based on soils-related criteria which is less restrictive than the criteria set forth in the report on the aforesaid investigations of subsurface conditions.

5.51.8.3 The detailed plan showing the design of shoring, etc., shall include surcharge loads for nearby embankments and structures, for spoil banks, and for construction equipment and other construction loadings. The plan shall indicate for all trench conditions the minimum horizontal distances from the side of the trench at its top to the near side of the surcharge loads.

5.51.8.4 Nothing contained in this section shall be construed as relieving the Contractor of the full responsibility for providing shoring, bracing, sloping, or other provisions which are adequate for worker protection. Review of the plan by the District and/or Engineer is only for general conformance to OSHA and Cal/OSHA requirements. Their failure to note exception(s) to the submittal does not relieve Contractor of any responsibility or liability for the plan. Contractor remains solely and completely responsible for all trench safety and for the means, methods, procedures, and materials therefor.

5.51.8.5 In accordance with California Public Contract Code section 7104, in the event that the work involves digging trenches or other excavations that extend deeper than four (4) feet below the surface, the Contractor shall promptly, and before the following conditions are disturbed, notify the District in writing, of any:

a. Material that the Contractor believes may be material that is hazardous waste, as defined in section 25117 of the Health and Safety Code, that is required to be removed to a Class I, Class II, or Class III disposal site in accordance with provisions of existing law;

b. Subsurface or latent physical conditions at the site differing from those indicated by information about the site made available to bidders prior to the deadline for submitting bids; or,

c. Unknown physical conditions at the site of any unusual nature, different materially from those ordinarily encountered and generally recognized as inherent in work of the character provided for in the Contract.

The District shall promptly investigate the conditions reported by the Contractor, and if it finds that the conditions do materially so differ, or do involve hazardous waste, and cause a decrease or increase in the Contractor's cost of, or the time required for, performance of any part of the work shall issue a change order under the procedures described in the Contract. In the event that a dispute arises between the District and the Contractor about whether the conditions materially differ, or involve hazardous waste, or cause a decrease or increase in the Contractor's cost of, or time required for, performance of any part of the work, the Contractor shall not be excused from any scheduled completion date provided for by the Contract, but shall proceed with all work to be performed under the Contract. The Contractor shall retain any and all rights provided either by Contract or by law which pertain to the resolution of disputes and protests between the contracting parties.

5.52 PROTECTION OF PERSON AND PROPERTY

5.52.1 The Contractor shall take whatever precautions are necessary to prevent damage to all existing improvements, including above ground and underground utilities, trees, shrubbery that is not specifically shown to be removed, fences, signs, mailboxes, survey markers and monuments, buildings, structures, the District's property, adjacent property, and any other improvements or facilities within or adjacent to the work. If such improvements or property are injured or damaged by reason of the Contractor's operations, they shall be replaced or restored, at the Contractor's expense, to a condition at least as good as the condition they were in prior to the start of the Contractor's operations.

5.52.2 The Contractor shall adopt all practical means to minimize interference to traffic and public inconvenience, discomfort or damage. The Contractor shall protect against injury to any pipes, conduits or other structures crossing the trenching or encountered in the work and shall be responsible for any injury done to such pipes or structures, or damage to property resulting therefrom. The Contractor shall support or replace any such structures without delay and without any additional compensation to the entire satisfaction of the Engineer. All obstructions to traffic shall be guarded by barriers illuminated at night. The Contractor shall be responsible for all damage to persons and property directly or indirectly caused by its operations and, under all circumstances, it must comply with the laws and regulations of the County and the State of California relative to safety of persons and property and the interruption of traffic and the convenience of the public within the respective jurisdictions.

5.52.3 The Contractor is cautioned that it must replace all improvements in rights of way and within the public streets to a condition equal to what existed prior to its entry onto the job.

5.52.4 Type and time of construction required at any road subject to interference by Contract work will be determined by those authorities responsible for maintenance of said road. It shall be the responsibility of the Contractor to determine the nature and extent of all such requirements, including provision of temporary detours as required; however, any construction right of way obtained by the District at affected roadways will be adequate for provision of all required detours. As required at any road crossing, the Contractor shall provide all necessary flagpersons, guardrails, barricades, signals, warning signs and lighting to provide for the safety of existing roads and detours. Immediately after the need for temporary detours ceases, or when directed, the Contractor shall remove such detours and perform all necessary cleanup work, including replacement of fences, and removal of pavement. Included shall be all necessary replacement of existing roadway appurtenances, grading work, soil stabilization and dust control measures, as required and directed. The cost of all work specified under this section shall be borne by the Contractor.

5.52.5 The Contractor shall examine all bridges, culverts, and other structures over which it will move its materials and equipment, and before using them, it shall properly strengthen such structures as necessary for their safe operation and use. The Contractor shall be responsible for any and all injury or damage to such structures caused by reason of its operations.

5.53 HAZARDOUS MATERIALS; HAZARD COMMUNICATION

5.53.1 Proposition 65 and the California Health and Safety Code requires businesses to provide warnings prior to exposing individuals to materials listed by the Governor as chemicals "known to cause cancer or reproductive toxicity." The District may use chemicals on the Governor's list at many of its facilities. In addition, many of these chemicals are present at non-District-owned facilities and locations. Accordingly, in performing the work or services contemplated under this Contract, Contractor, its employees, agents, and subcontractors may be exposed to chemicals on the Governor's list. Except as provided in this section, Contractor is responsible for notifying its employees, agents, and subcontractors that work performed hereunder may result in exposures to chemicals on the Governor's list.

Before starting work, the Contractor shall have a written Hazard Communication Program ("HCP") in place that complies with the requirements of section 5194 of Title 8 of the California Code of Regulations, including the requirements of 8 C.C.R. section 5194(e). The information in the Contractor's HCP must include the methods by which the Contractor will communicate to the District which hazardous substances it will use and store on the job site(s) to which the District's and Contractor's employees and subcontractors may be exposed. The Contractor will submit its HCP to the District at the same time as submittal of its initial project schedules as provided in section 5.31 of these General Conditions. The Contractor also will provide copies of safety data sheets ("SDS") for all hazardous substances brought onto and used or stored on the job site(s). The Contractor also will ensure that all hazardous substances are marked with Proposition 65 and any other visible warning labels as required by law. Whenever possible, the Contract shall provide

SDS for all hazardous substances to the District prior to bringing a hazardous substance onto a job site, but will provide all SDS by no later than the time the hazardous substance is physically brought onto the site. The District will communicate the Contractor's HCP and SDS information to the District's employees who work on or will enter the job site(s). The District will provide the Contractor with a copy of the District's HCP and SDS information specific to District operations on the job site(s). The Contractor shall, in turn, convey this information to its employees and subcontractors. During the course of the work, the Contractor will keep copies of both its and the District's HCP, SDS and other relevant information at Contractor's office on the job site(s).

5.53.2 If the Work includes the construction, alteration, improvement, or maintenance of electric power generation, control, transformation, transmission or distribution lines or equipment within the meaning of Code of Federal Regulations title 29, sections 1910 or 1926, then the Contractor will implement and comply with the requirements of the "contract employer" as described and set forth in said sections including, but not limited to, the obligations to properly train the Contractor workers on safety-related work practices and procedures, exchange information with the District concerning unique hazardous conditions presented by the Work, instruct the Contractor workers about the hazardous conditions relevant to the Work, and coordinate with the District on safety-related work rules and procedures. In cases of Work, where it is determined that the worksite contains an oxygen deficient atmosphere or harmful dusts, fumes, mists, vapors, or gases that may give rise to the harmful exposure of employees, Contractor shall manage such hazards by complying with the requirements of section 1528 et seq. of Title 8 of the California Code of Regulations and section 1926 of Title 29 of the Code of Federal Regulations. The Contractor also shall be responsible for transmitting safety-related information under sections 1910 and 1926 with any subcontractors retained by it to perform electrical-related Work under the Contract.

5.54 RESPONSIBILITY FOR REPAIR OF FACILITIES

All public or private facilities, including but not limited to canals, structures, telephone cables, roadways, curbs, gutters, parking lots, private drives, levees and embankments for creeks, ponds and reservoirs disturbed during construction of the work shall be repaired and/or replaced by the Contractor to match facilities existing prior to construction. In addition, the Contractor shall be responsible for any settlement damage to such facilities or adjoining areas for a period of one year after acceptance of such required facilities.

5.55 DISTRICT'S REPAIR

In the event the Contractor refuses or neglects to make good any loss or damage for which it is responsible under this Contract, the District may itself, or by the employment of others, make good any such loss or damage, and the cost and expense of doing so, including any reasonable engineering, legal and other consultant fees, and any costs of administrative and managerial services, shall be charged to the Contractor. Such costs and expenses may be deducted by the District from claims for payment made by the Contractor for work completed or remaining to be completed.

5.56 CONTRACTOR'S LICENSE NOTICE

STATEMENT REQUIRED BY CALIFORNIA BUSINESS & PROFESSIONS CODE SECTION 7030: "CONTRACTORS ARE REQUIRED BY LAW TO BE LICENSED AND REGULATED BY THE CONTRACTORS STATE LICENSE BOARD WHICH HAS JURISDICTION TO INVESTIGATE COMPLAINTS AGAINST CONTRACTORS IF A COMPLAINT REGARDING A PATENT ACT OR OMISSION IS FILED WITHIN FOUR YEARS OF THE DATE OF THE ALLEGED VIOLATION. A COMPLAINT REGARDING A LATENT ACT OR OMISSION PERTAINING TO STRUCTURAL DEFECTS MUST BE FILED WITHIN 10 YEARS OF THE DATE OF THE ALLEGED VIOLATION. ANY QUESTIONS CONCERNING A CONTRACTOR MAY BE REFERRED TO THE REGISTRAR, CONTRACTORS STATE LICENSE BOARD, P.O. BOX 26000, SACRAMENTO, CALIFORNIA 95826."

5.57 PUBLIC WORKS CONTRACTOR REGISTRATION

In accordance with California Labor Code Section 1771.1(a), a contractor or subcontractor shall not be qualified to bid on, be listed in a bid proposal, subject to the requirements of Section 4104 of the Public Contract Code, or engage in the performance of any contract for public work, as defined in this Division 2, Part 7, Chapter 1 of the Labor Code (commencing with Section 1720), unless currently registered and qualified to perform public work pursuant to Section 1725.5 of the Labor Code. In accordance with Labor Code section 1771.4(a)(1), this project is subject to compliance monitoring and enforcement by the Department of Industrial Relations.

5.58 INSURANCE

5.58.1 The Contractor shall procure and maintain for the duration of the Contract, and for ten years thereafter, the following insurance against claims for injuries to persons or damages to property which may arise from or in connection with the performance of the work hereunder by the Contractor, its agents, representatives, employees or subcontractors.

5.58.1.1 General Liability - Commercial General Liability (CGL) - Insurance Services Office (ISO) Commercial General Liability Coverage (Occurrence Form CG 00 01) including products and completed operations, property damage, bodily injury, personal and advertising injury with limit of at least five million dollars ($5,000,000) per occurrence or the full per occurrence limits of the policies available, whichever is greater. If a general aggregate limit applies, either the general aggregate limit shall apply separately to this project/location (coverage as broad as the ISO CG 25 03, or ISO CG 25 04 endorsement provided to District) or the general aggregate limit shall be twice the required occurrence limit.

District, its directors, officers, employees, and authorized volunteers are to be given insured status (at least as broad as ISO Form CG 20 10 11 85 or if not available, through the addition of both CG 20 10 10 01 and CG 20 37 10 01, with respect to liability arising out of work or operations performed by or on behalf of the Contractor including materials, parts, or equipment furnished in connection with such work or operations. General liability coverage can be provided in the form of an endorsement to the Contractor’s insurance.

5.58.1.2 Automobile Liability - Insurance Services Office (ISO) Business Auto Coverage (Form CA 00 01), covering Symbol 1 (any auto) with limit of one million dollars ($1,000,000) for bodily injury and property damage each accident.

5.58.1.3 Workers' Compensation Insurance - The Contractor shall provide workers' compensation coverage as required by the State of California, with Statutory Limits, and Employer's Liability Insurance with limit of no less than $1,000,000 per accident for bodily injury or disease.

5.58.1.4 Builder's Risk – (Course of Construction) - insurance utilizing an "All Risk" (Special Perils) coverage form with limits equal to the completed value of the project and no coinsurance penalty provision. Notwithstanding the policy duration required in section 5.58.1, the insurance coverage required by this section 5.58.1.4 shall be maintained at least until Final Completion occurs and the Project is accepted by District as provided in section 5.67.

If the Contractor maintains broader coverage and/or higher limits than the minimums shown above, the District requires and shall be entitled to the broader coverage and/or higher limits maintained by the Contractor. Any available insurance proceeds in excess of the specified minimum of insurance and coverage shall be available to the District. Furthermore, the above minimum insurance coverage limits can be met through provision of umbrella or excess policy insurance coverage consistent with the provisions of this section 5.58.

5.58.2 Any deductibles or self-insured retentions must be declared to and approved by the District. At the option of the District, either: the insurer shall reduce or eliminate such deductibles or self-insured retentions as respects the District, its officers, officials, employees and volunteers; or the Contractor shall procure a bond or other security guaranteeing payment of losses and related investigations, claim administration and defense fees, costs and expenses. All policies that include a self-insured retention shall include a provision that payments of defense costs and damages (for bodily injury, property damage, personal injury or any other coverages included in the policy) by any party, including additional insureds and insurers, shall satisfy the self-insured retention limits.

5.58.3 The general liability and automobile liability policies are to contain, or be endorsed to contain, the following provisions:

5.58.3.1 Waiver of Subrogation (also known as Transfer of Rights of Recovery Against Others to Us): The Contractor hereby agrees to waive rights of subrogation to obtain endorsement necessary to affect this waiver of subrogation in favor of the District, its directors, officers, employees, and authorized volunteers, for losses paid under the terms of this coverage which arise from work performed by the Named Insured for the District; this provision applies regardless of whether or not the District has received a waiver of subrogation from the insurer.

5.58.3.2 The District, its officers, officials, employees, agents and volunteers are to be covered as additional insureds as respects: liability arising out of activities performed by or on behalf of the Contractor, products and completed operations of the Contractor; premises owned, occupied or used by the Contractor; or automobiles owned, leased, hired or

borrowed by the Contractor. The coverage shall contain no special limitations on the scope of protection afforded to the District, its officers, officials, employees, agents or volunteers. The additional insured coverage or endorsement shall comply with California Insurance Code section 11580.04.

5.58.3.3 For any claims related to this project, the Contractor's insurance general and automobile liability coverage shall be primary insurance as respects the District, its officers, officials, employees, agents and volunteers. Any insurance or self-insurance maintained by the District, its officers, officials, employees, agents or volunteers shall be excess of the Contractor's insurance and shall not contribute with it.

5.58.3.4 Any failure to comply with reporting or other provisions of the policies including breaches of warranties shall not affect coverage provided to the District, its officers, officials, employees, agents or volunteers.

5.58.3.5 The Contractor's insurance shall apply separately to each insured against whom claim is made or suit is brought, except with respect to the limits of the insurer's liability.

5.58.3.6 Each insurance policy required by this section shall be endorsed to state that coverage shall not be suspended, voided, canceled by either party, or reduced in coverage or in limits except after 30 days' prior written notice by U.S. mail has been given to the District, or after 10 days' written notice in the case of cancellation for non-payment of premium.

5.58.4 Course of Construction Coverage Requirements. Course of construction policies shall contain, or be endorsed to contain, the following provisions: (a) District shall be named as loss payee; and (b) The insurer shall waive all rights of subrogation against the District.

5.58.5 Acceptability of Insurers. Insurance is to be placed with insurers with a current A.M. Best's rating of no less than A-:VII or equivalent and that are authorized to do business and in good standing in California, unless otherwise approved by District. In the case of Workers' Compensation and Employer's Liability insurance, coverage provided by the California State Compensation Insurance Fund is acceptable.

5.58.6 Verification of Coverage. Before commencing work, Contractor shall provide to District the following proof of insurance: (a) certificate(s) of insurance on ACORD Form 25-S (or insurer's equivalent) evidencing the required insurance coverages; and (b) endorsement(s) on ISO Form CG 20 10 (or insurer's equivalent), signed by a person authorized to bind coverage on behalf of the insurer(s) and certifying the additional insured coverages, or equivalent additional insured blanket endorsement. The District reserves the right to require complete copies of all required insurance policies and/or endorsements affecting required insurance coverage at any time.

5.58.7 Subcontractors. The Contractor shall include all actions and activities of its subcontractors as insureds under its policies, or shall require each subcontractor to provide insurance coverage consistent with the foregoing and to furnish separate endorsements or

certificates to the District. All coverages for subcontractors shall be subject to all of the requirements stated in this section.

5.58.8 Obligation to Maintain Coverage. Contractor shall maintain all required insurance coverages for the period provided in this section 5.58. If any of the required coverages expire during the coverage period, Contractor shall obtain renewal or replacement coverages and deliver certificates for the renewed or replacement coverages and any required endorsements to the District at least 10 days before the expiration date of the existing coverage.

5.58.9 Survival of Guarantee. Any products/completed operations insurance coverage shall be maintained after completion of the project for the full guarantee period.

5.58.10 The requirements as to the types, limits, and the District's approval of insurance coverage to be maintained by the Contractor are not intended to and shall not in any manner limit or qualify the liabilities and obligations assumed by the Contractor under the Contract.

5.58.11 In addition to any other remedy the District may have, if the Contractor or any of the subcontractors fails to maintain the insurance coverage as required in this section 5.58, the District may obtain such insurance coverage as is not being maintained, in form and amount substantially the same as required herein, and the District may deduct the cost of such insurance from any amounts due or which may become due the Contractor under this Contract.

5.59 INDEMNITY AND DEFENSE OBLIGATION

5.59.1 To the fullest extent permitted by law, Contractor shall protect, defend, indemnify and hold harmless the District and Engineer, and their respective officers, directors, agents, employees, volunteers, representatives, boards, and consultants from and against all penalties and fines imposed by law and all loss, claim, cause of action, demand, suit, judgment, cost, damage, expense, and liability (including but not limited to court or arbitration costs and reasonable attorneys' and expert witness fees) resulting from injury to or death of persons, including without limitation employees of the District, Engineer and Contractor, or damage to or loss of property, caused by, arising out of or in any way connected with the Contractor's or its subcontractors' or suppliers' performance, operations or activities under this Contract, except to the extent the sole negligence, active negligence or willful misconduct of an indemnified party proximately causes the loss, claim, demand, cost, suit, judgment, penalty, fine, cause of action, damage, expense, or liability.

5.59.2 Contractor's duty to defend is a separate and distinct obligation from Contractor's duty to indemnify. Upon the request of an indemnified party hereunder, Contractor shall defend any suit asserting a claim covered by this indemnity and shall pay any costs and expenses that may be incurred by an indemnified party in enforcing this indemnity. The Contractor shall be obligated to defend, in all legal, equitable, administrative, or special proceedings, the District and/or Engineer, and their respective officers, directors, agents, employees, volunteers, representatives, boards, and consultants, immediately upon tender to Contractor of the claim in any form or at any stage of an action or proceeding, whether or not liability has been established. The obligation to defend extends through final judgment, including

exhaustion of any appeals. In all cases, the indemnified party shall have the right to approve counsel selected by Contractor in the defense of any legal action or with respect to any claim, which approval shall not be unreasonably withheld. In addition, the indemnified party shall have the right to participate in and be represented by counsel of its own choice and at its own expense in any legal action or with respect to any claim. The defense obligation includes an obligation to provide independent defense counsel if the Contractor asserts that liability is caused in whole or in part by the negligence or willful misconduct of an indemnified party.

5.59.3 The District may withhold from payment due Contractor hereunder such amounts as, in the District's opinion, are sufficient to provide security against all loss, damage, expense, penalty, fine, cost, claim, demand, suit, cause of action, judgment, or liability covered by the foregoing indemnity provision.

5.59.4 In any and all claims against the District or the Engineer and his consultants, and each of their officers, directors, employees and agents by any employee of the Contractor, any subcontractor, anyone directly or indirectly employed by any of them, or anyone for whose acts any of them may be liable, the indemnification obligation under this section shall not be limited in any way by any limitation on the amount or type of damages, compensation or benefits payable by or for the Contractor, any subcontractor, anyone directly or indirectly employed by any of them, or anyone for whose acts any of them may be liable under Workers' Compensation statutes, disability benefit statutes or other employee benefit statutes.

5.59.5 Neither termination of this Contract, completion of the acts to be performed under this Contract, nor the Engineer's approval or the District's acceptance of the work shall release Contractor from its obligations to indemnify and defend the District, and the Engineer, and their respective officers, directors, agents, employees, volunteers, representatives, boards, and consultants, as provided in sections 5.59.1 and 5.59.2, so long as the event upon which the claim is predicated shall have occurred prior to the effective date of any such termination or completion and arose out of or was in any way connected with performance of operations under this Contract by Contractor, its employees, agents, suppliers or subcontractors, or the employee, agent or subcontractor of any one of them,.

5.59.6 Submission of insurance certificates or submission of other proof of compliance with the insurance requirements in this Contract does not relieve Contractor from liability under this indemnification and hold harmless clause. The obligations of this indemnity section shall apply whether or not such insurance policies shall have been determined to be applicable to any of such damages or claims for damages.

5.59.7 In accordance with California Public Contract Code section 9201(b), if District receives any written third-party claim relating to work performed under this Contract, then District agrees to promptly notify Contractor about the third-party claim.

5.60 PROTECTION OF WORK

5.60.1 The Contractor shall be responsible for the care of all work until its completion and final acceptance; and it shall, at its own expense, replace damaged or lost material and repair damaged parts of the work or the same may be done at its expense by the

District and the Contractor and its sureties shall be liable therefor. The Contractor shall make its own provisions for properly storing and protecting all material and equipment against theft, injury, or damage from any and all causes. Damaged material and equipment shall not be used in the work. The Contractor shall take all risks from floods and casualties except as provided by law, and shall make no charge for the restoration of such portions of the work as may be destroyed or damaged by flood or other casualties or because of danger from flood or other casualties or for delays from such causes. The Contractor may, however, be allowed a reasonable extension of time on account of such delays, subject to the conditions hereinbefore specified.

5.60.2 The Contractor shall effectively secure and protect adjacent property and structures, livestock, crops and other vegetation. If applicable, the Contractor shall open fences on or crossing the right of way and install temporary gates of sound construction thereon so as to prevent the escape of livestock. Adjacent fence posts shall be adequately braced to prevent the sagging or slackening of the wire. Before such fences are opened, the Contractor shall notify the owner or tenant of the property and, where practicable, the opening of the fence shall be in accordance with the wishes of said owner or tenant. The Contractor shall be responsible that no loss or inconvenience shall accrue to the owner or tenant by virtue of its fences having been opened or the gate not having been either shut or attended at all times. Where special types of fences are encountered, the Contractor shall install temporary gates made of similar materials and of suitable quality to serve the purposes of the original fences. In all cases when the Contractor removes fences to obtain work room, it shall provide and install temporary fencing as required, and on completion of construction shall restore the original fence to the satisfaction of the Engineer. All costs of providing, maintaining and restoring gates and fencing shall be borne by the Contractor. The Contractor shall provide and maintain all passageways, guard fences, lights and other facilities for protection required by public authority or local conditions.

5.60.3 The Contractor shall use extreme care during construction to prevent damage from dust to crops and adjacent property. The Contractor, at its own expense, shall provide adequate dust control for the right of way and take other preventative measures as directed by the Engineer.

5.60.4 The Contractor shall be responsible for all damage to any property resulting from trespass by the Contractor or its employees in the course of their employment, or subcontractors or their employees in the course of their employment, or anyone directly or indirectly employed by any of them, where such trespass was committed with or without the consent or knowledge of the Contractor.

5.60.5 The Contractor shall see that the worksite is kept drained and free of all ground water and any other water which may impede the progress or execution of the Contract work.

5.60.6 The Contractor shall be responsible for any damage caused by drainage or water runoff from construction areas and from construction plant areas.

5.60.7 In an emergency affecting the safety of life, or of the work, or of adjoining property, the Contractor, without special instruction or authorization from the Engineer, is hereby permitted to act at its discretion to prevent such threatened loss or injury, and it shall so

act without appeal if so instructed or authorized. Should the Engineer deem an emergency condition to exist, the Contractor shall immediately do those things and take those steps ordered by the Engineer. The decision of the Engineer in this respect shall be final and conclusive. Any claims for compensation made by the Contractor on account of emergency work shall be determined as specified under section 5.3.

5.60.8 Except as provided by California Government Code section 4215, the Contractor shall be responsible for the removal, relocation and protection of all public and private utilities, including irrigation facilities in the nature of utilities, located on the site of the construction project if and to the extent that the same are identified in the Contract Documents; and the Contractor shall not be entitled to any extension of time or claim for damages for extra compensation in connection therewith. If and to the extent that such utilities or facilities are not identified in the Contract Documents, as between the Contractor and the District, the District will be responsible for the cost of their removal, relocation or protection, as the case may be, but the Contractor shall perform any such work in conformance with applicable provisions of section 5.3, if so directed by the Engineer and in such situation the Contractor shall not be responsible for delay in completion of the project caused by the failure of the District or the owner of the utility to provide for such removal or relocation. If the Contractor, while performing the Contract, discovers utility or irrigation facilities not identified by the District in the Contract Documents, it shall immediately notify the Engineer in writing.

5.60.9 When the work to be performed under the Contract crosses or otherwise interferes with existing streams, watercourses, canals, farm ditches, pipelines, drainage channels, or water supplies, the Contractor shall provide for such watercourse or pipelines and shall perform such construction during the progress of the work so that no damage will result to either public or private interests; and the Contractor shall be liable for all damage that may result from failure to so provide during the progress of the work.

5.61 ACCIDENTS

5.61.1 The Contractor shall provide and maintain, in accordance with California Labor Code section 6708 and Cal/OSHA requirements, adequate emergency first aid treatment for its employees and anyone else who may be injured in connection with the work.

5.61.2 The Contractor shall promptly report in writing to the Engineer all accidents of any nature arising out of, or in connection with, the performance of the work, on or adjacent to the site, which caused death, personal injury, or property damage, giving full details and statements of witnesses. In addition, if death or serious injury or serious damage are caused, the accident shall be reported immediately by telephone or messenger to the District and the Engineer.

5.61.3 If any claim is made by anyone against the Contractor or any subcontractor on account of any accident, the Contractor shall promptly report the facts in writing to the Engineer, giving full details of the claim.

5.62 NO PERSONAL LIABILITY

Neither the District, the Engineer, nor any of their officers, directors, agents, or employees shall be personally responsible for any liability arising under the Contract, except such obligations as are specifically set forth herein.

5.63 MEASUREMENT OF QUANTITIES

Where the Contract provides for payment on a lump sum price basis, no measurement of quantity will be made. Where the Contract provides for payment on a unit price basis, the quantities of work performed will be computed by the Engineer on the basis of measurements taken by the Engineer, and these measurements shall be final and conclusive. All quantities of work computed under the Contract shall be based upon measurements by the Engineer according to United States Measurements and Weights. Methods of measurement are specified herein and in the Specifications.

5.64 SCOPE OF PAYMENT

5.64.1 The Contractor shall accept the compensation provided in the Contract as full payment for furnishing all labor, materials, tools, equipment, and incidentals necessary to the completed work and for performing all work contemplated and embraced under the Contract; also for loss or damage arising from the nature of the work, or from the action of the elements, or from any unforeseen difficulties which may be encountered during the prosecution of the work until the acceptance by the District and for all risks of every description connected with the prosecution of the work; also for all expenses incurred in consequence of the suspension or discontinuance of the work as provided in the Contract; and for completing the work according to the Specifications and Plans. Neither the payment of any estimate nor of any retained percentage shall relieve the Contractor of any obligation to make good any defective work or material.

5.64.2 No compensation will be made in any case for loss of anticipated profits. Increased or decreased work involving supplemental agreements will be paid for as provided in such agreements.

5.65 PROGRESS ESTIMATE

For each calendar month of Contract work, the Engineer will prepare a progress estimate of all work performed under the Contract. Within the first ten (10) days of each succeeding calendar month, the Engineer will prepare in writing and certify to the District, an estimate which in his opinion is a fair approximation of the value of all work done under the Contract, including any amounts due the Contractor for extra work and change orders. In arriving at the value of the work done, the Engineer will give consideration to the value of labor and materials which have been incorporated into the permanent work by the Contractor during the preceding month. Consideration will not be given to preparatory work done or for materials or equipment on hand. In order to assist the Engineer, the Contractor shall furnish the Engineer with copies of invoices for all such items delivered to the job site and incorporated into the work.

5.66 PROGRESS PAYMENTS

5.66.1 Unless otherwise provided for at a different rate in the Invitation to Bid and the Contract, the District will pay the Contractor ninety-five (95%) percent of the amount of each properly submitted and undisputed progress payment request. Five (5%) percent, or any higher rate specified in the Invitation to Bid and the Contract, of the amount of each payment request shall be retained by the District until final completion and acceptance of all work under the Contract; provided, however, that if the Engineer, at any time after fifty (50%) percent of the work has been completed, finds that satisfactory progress is being made, the District may, in its sole discretion, pay any or all of the remaining progress payments in full or at a lower retention. In no case shall the District make a progress payment to the Contractor that exceeds one hundred percent (100%) of the value of the work actually completed to the date of the payment request.

5.66.2 The Contractor may invoice the District for no more than seventy-five (75%) percent of the cost of materials and equipment stored onsite, as long as the material or equipment has been inspected and approved by the Engineer or the District's representative, the quantity of material or equipment can be determined to the District's satisfaction after Contractor delivery of a paid invoice for such materials or equipment, and the materials or equipment are properly stored and protected in accordance with the manufacturer's recommendations. The Contractor retains liability for any damage or degradation of the quality of stored materials and equipment until after they are incorporated into the work and the work is approved by the District in accordance with the applicable requirements of the Contract Documents.

5.66.3 Within the first ten (10) days of each succeeding calendar month, the Contractor shall submit a completed and signed progress payment request form with its estimate of the Work completed during the prior month and the work completed to date in a format corresponding to the unit price schedule and accepted cost breakdown. In accordance with California Public Contract Code section 20104.50, a written payment request from the Contractor shall be reviewed by the Engineer as soon as practicable in order to determine whether it is proper. If it is determined not to be a proper payment request suitable for payment, then the Engineer shall return it to the Contractor with a written explanation of the deficiencies as soon as practicable, but not later than 7 days after receipt of the payment request. The Engineer will be available to meet to discuss the returned progress payment request in an attempt to reach an agreement thereon prior to its resubmittal(s). Following such a meeting, the Contractor shall submit a revised payment request, which reflects the changes, agreed upon in the above-mentioned meeting. When the Contractor's revised payment request conforms with the Engineer's evaluation, the Engineer will certify payment to the Contractor in conformance with section 5.66.4. When such an agreement cannot be reached, the Engineer's progress estimate will be used.

5.66.4 If the payment request is determined to be properly submitted and is undisputed, the Engineer will certify the payment as provided above and the District shall make the payment to the Contractor within 30 days after receipt of the payment request. If a properly submitted and undisputed payment request is not paid within this 30-day period, then the District shall pay interest on the overdue amount to the Contractor at the legal rate set forth at California Code of Civil Procedure section 685.010. This section shall not apply if District funds

are not available for payment of the payment request or if payment is delayed due to an audit inquiry by the financial officer of the District.

5.66.5 The Contractor may, in accordance with California Public Contract Code section 22300, substitute securities for any monies which the District may withhold to insure performance under the Contract. Alternatively, on written request of the Contractor and at its expense, the District shall make payments of the retention earnings directly to an escrow agent pursuant to an escrow agreement entered into consistent with the terms of Public Contract Code section 22300.

5.66.6 When, in the judgment of the Engineer, the work is not proceeding in accordance with the provisions of the Contract, or when in his judgment the total amount of the work done since the last estimate amounts to less than $1,000, no pay estimate will be prepared and no progress payment will be made.

5.66.7 No progress estimate or payment shall be considered to be an approval or acceptance of any work, materials or equipment. Estimated amounts and values of work done and materials and equipment incorporated into the work will be conformed with actual amounts and values as they become available in subsequent progress estimates, progress payments and the final estimate and payment. All estimates and payments will be subject to correction in subsequent progress estimates and payments and the final estimate and payment.

5.66.8 It is mutually agreed between the parties to the Contract that no payments made under the Contract, including progress payments and the final payment, shall be evidence of the performance of the Contract, either wholly or in part, and no payment shall be construed to be an acceptance of any defective or incomplete work or improper materials.

5.66.9 District reserves the right to make payments jointly to the order of the Contractor and to any of its subcontractors or suppliers that might have a right to file a stop notice with the District. The District shall have no obligation to pay or to ensure the payment of money to a subcontractor or supplier, except as may otherwise be required by law.

5.66.10 Each progress payment made to the Contractor in accordance with the Engineer's determination of progress payment requests is contingent upon the Contractor furnishing the District with a signed written waiver and release of all claims against the District arising out of or in any way connected to the Contract. Disputed Contract claims must be specifically stated and excluded by the Contractor from the operation of the waiver and release. The waiver and release shall be substantially in the form provided in Civil Code sections 8132 (Exhibit A) or 8134 (Exhibit B). The Contractor may only use the conditional waiver and release if the District does not pay all or a portion of a progress payment estimate submitted by the Contractor and the Contractor disputes the District's determination.

In the event that the Contractor fails or refuses to furnish the District with a signed written waiver and release of all claims against the District arising out of or in any way connected to the Contract, Contractor's acceptance of each progress payment shall be Contractor's release of all claims against the District in relation to all work paid to date to the fullest extent permitted by law.

CONDITIONAL WAIVER AND RELEASE ON PROGRESS PAYMENT (EXHIBIT A)

NOTICE: THIS DOCUMENT WAIVES THE CLAIMANT'S LIEN, STOP PAYMENT NOTICE, AND PAYMENT BOND RIGHTS EFFECTIVE ON RECEIPT OF PAYMENT. A PERSON SHOULD NOT RELY ON THIS DOCUMENT UNLESS SATISFIED THAT THE CLAIMANT HAS RECEIVED PAYMENT.

Identifying Information

Name of Claimant: _____
Name of Customer: _____
Job Location: _____
Owner: _____
Through Date: _____

Conditional Waiver and Release

This document waives and releases lien, stop payment notice, and payment bond rights the claimant has for labor and service provided, and equipment and material delivered, to the customer on this job through the Through Date of this document. Rights based upon labor or service provided, or equipment or material delivered, pursuant to a written change order that has been fully executed by the parties prior to the date that this document is signed by the claimant, are waived and released by this document, unless listed as an Exception below. This document is effective only on the claimant's receipt of payment from the financial institution on which the following check is drawn:

Maker of Check: _____
Amount of Check: $ _____
Check Payable to: _____

Exceptions

This document does not affect any of the following:

(1) Retentions.

(2) Extras for which the claimant has not received payment.

(3) The following progress payments for which the claimant has previously given a conditional waiver and release but has not received payment:
Date(s) of waiver and release: _____
Amount(s) of unpaid progress payment(s): $ _____

(4) Contract rights, including (A) a right based on rescission, abandonment, or breach of contract, and (B) the right to recover compensation for work not compensated by the payment.

Signature

Claimant's Signature: _____
Claimant's Title: _____
Date of Signature: _____

UNCONDITIONAL WAIVER AND RELEASE ON PROGRESS PAYMENT (EXHIBIT B)

NOTICE TO CLAIMANT: THIS DOCUMENT WAIVES AND RELEASES LIEN, STOP PAYMENT NOTICE, AND PAYMENT BOND RIGHTS UNCONDITIONALLY AND STATES THAT YOU HAVE BEEN PAID FOR GIVING UP THOSE RIGHTS. THIS DOCUMENT IS ENFORCEABLE AGAINST YOU IF YOU SIGN IT, EVEN IF YOU HAVE NOT BEEN PAID. IF YOU HAVE NOT BEEN PAID, USE A CONDITIONAL WAIVER AND RELEASE FORM.

Identifying Information

Name of Claimant: _____
Name of Customer: _____
Job Location: _____
Owner: _____
Through Date: _____

Unconditional Waiver and Release

This document waives and releases lien, stop payment notice, and payment bond rights the claimant has for labor and service provided, and equipment and material delivered, to the customer on this job through the Through Date of this document. Rights based upon labor or service provided, or equipment or material delivered, pursuant to a written change order that has been fully executed by the parties prior to the date that this document is signed by the claimant, are waived and released by this document, unless listed as an Exception below. The claimant has received the following progress payment:
$ _____.

Exceptions

This document does not affect any of the following:

(1) Retentions.

(2) Extras for which the claimant has not received payment.

(3) Contract rights, including (A) a right based on rescission, abandonment, or breach of contract, and (B) the right to recover compensation for work not compensated by the payment.

Signature
Claimant's Signature: _____
Claimant's Title: _____
Date of Signature: _____

5.67 COMPLETION AND FINAL ACCEPTANCE

5.67.1 The following definitions govern in interpreting this article and wherever such terms may appear in the Contract Documents:

5.67.1.1 "Final Completion" means the time when the work has been fully completed in accordance with the Contract Documents and is ready for acceptance and final payment by the District.

5.67.1.2 "Final Inspection" means the inspection conducted by the District after to verify that the work has reached Final Completion.

5.67.1.3 "The Final Punch List" is the listing of items that, in the Engineer's opinion, remain uncompleted after Substantial Completion but that must be completed by the Contractor prior to Final Completion.

5.67.1.4 "Semi-Final Inspection" means that inspection conducted by the Engineer to determine if the work is Substantially Complete.

5.67.1.5 "Substantial Completion" means the work has progressed to the point that: (1) the work is ready for beneficial use and occupancy by the District for the intended purpose, (2) all fire and life safety work has been completed, inspected and accepted, (3) all mechanical and process systems and equipment are complete and have been put in automatic operation, (4) the total value of uncompleted work is less than one-half of one percent of the Contract Price and any approved cost extensions and (5) completing the work will not significantly interfere with the District's convenience, or use or cost of operating the work.

5.67.2 When specifically provided for in the Contract Documents or when agreed to in writing by the District and the Contractor, the District may begin using a portion of the work even though it is not Substantially Complete. In such a case, the Contractor, the District and the Engineer shall first agree on and document responsibilities for security, operation, safety, maintenance, utilities, insurance, warranties, and guarantees for that portion of the work being used by the District. The District, the Contractor and the Engineer shall inspect such portion of the work and shall prepare a list of work to be completed or corrected before final acceptance. The District's use of any portion of the work shall not constitute final acceptance of that portion of the work prior to Final Completion and acceptance of the work as a whole. The District shall allow the Contractor reasonable access to complete or correct work in areas being used by the District. Partial beneficial occupancy shall not relieve the Contractor of Liquidated Damages or waive any of the District's rights under the Contract unless the Contract Documents expressly provide for and identify such portion of the work to be considered Substantially Complete before the remaining portions of the work or waiver of specific District rights.

5.67.3 When the Contractor considers the work nearly complete, the Contractor shall review the Contract Documents, inspect the work and prepare a list of deficiencies (Punch List). When the Punch List is prepared, the Contractor will deliver copies to the Engineer and the District. The Contractor shall complete or correct the items on the Punch List until, in the Contractor's opinion, the work is Substantially Complete and ready for occupancy and use by the District. The Contractor shall then deliver the completed Punch List to the Engineer and notify the

Engineer in writing that the Contractor believes the work is Substantially Complete and ready for Semi-Final Inspection.

5.67.4 After the Contractor notifies the Engineer in writing that it believes the work is substantially complete, the Engineer will conduct the Semi-Final Inspection and may add additional items to the Contractor's Punch List. As a result of this inspection, the Engineer may determine that: (1) the work is not sufficiently complete to warrant a Semi-Final Inspection, additions to the Contractor's Punch List, or the preparation of a Final Punch List; (2) the work is sufficiently complete for the Engineer to prepare a Final Punch List but certain incomplete or Defective work prohibits use of the work for its intended purpose and therefore, the work is not Substantially Complete; or (3) that the work is Substantially Complete and usable for its intended purpose and the Engineer can prepare a Final Punch List. In preceding cases (1) and (2), the Contractor shall continue the work and call for a second Semi-Final Inspection when it believes the work is ready. If the Contractor does not achieve Substantial Completion on the second attempt, it shall reimburse the District the cost of the Engineer's services for additional inspections. In case (3), the Engineer will prepare a Final Punch List and a notice of Substantial Completion, which shall state the time agreed to by the District and the Contractor, not to exceed 30 days, in which the Contractor shall complete all remaining Punch List items and ready the work for Final Inspection. The Engineer shall attach a copy of the Final Punch List to the notice of Substantial Completion. Time to complete punch list items provided in this section 5.67.4 is for the convenience of the District and is intended as a deadline; and therefore, nothing in this section shall extend the time of completion for the fixed in the Contract Documents or excuse the failure of the Contractor to timely deliver the work as complete in accordance with the Contract Documents.

5.67.5 When the Contractor has completed or corrected all items on the Engineer's Final Punch List and has made all required final submittals, the Contractor shall give the Engineer written notice that the work is ready for Final Inspection and acceptance and upon receipt of a final Application for Payment, the Engineer shall make a Final Inspection. If the Engineer finds the work is not fully complete, it shall notify the Contractor of items still requiring completion or correction. The Contractor shall immediately correct these deficiencies and call for a re-inspection. When, on the basis of its knowledge of the work, observations and inspections, the Engineer finds that the work is acceptable and fully complete in accordance with the Contract Documents, and when all final submittals have been made, the Engineer will recommend that the District issue and file a Notice of Completion designating Final Completion of the work, make Final Payment and accept the work in accordance with the terms and conditions of the Contract Documents.

5.67.6 The Engineer's failure to include an item on the Final Punch List, to make the Semi-Final or the Final Inspection, or to recommend final acceptance shall not alter the Contractor's responsibility to complete all work in accordance with the Contract Documents. If any lien or stop notice remains unsatisfied, the Contractor shall immediately take all steps necessary to remove any such lien or stop notice before Final Payment is made.

5.67.7 The making of Final Payment shall constitute a waiver of claims by the Contractor except those arising from:

5.67.7.1 Liens, claims, security interests or encumbrances arising out of the Contract and unsettled;

5.67.7.2 Failure of the work to comply with the requirements of the Contract Documents; or

5.67.7.3 Terms of the one-year guarantee period and special warranties required by the Contract Documents.

5.67.7.4 Any of the Contractor's continuing obligations under the Contract Documents.

5.68 FINAL PAYMENT

Within 10 days after the date of completion and Contractor's delivery to the District of a complete release of all liens arising out of this Contract, or receipts in full covering all labor, materials and equipment for which a lien could be filed, or a bond satisfactory of the District to defend and indemnify the District against such liens, the District shall accept the work and file in the office of the County Recorder, a Notice of Completion of the work herein agreed to be done by the Contractor. On the expiration of 40 days after the recordation of such Notice of Completion and there being no liens or stop notices filed, the difference between said final estimate and all payments theretofore made to the Contractor shall be due and payable to the Contractor, subject to any requirements concerning the furnishing of a maintenance bond, and excepting only such sum or sums as may be withheld or deducted in accordance with the provisions of this Contract or as required by law. All prior certifications upon which partial payments may have been made, being merely estimates, shall be subject to correction in the final certificate. In accordance with California Public Contract Code section 7107(c), in the event of a dispute between the District and the Contractor, the District may withhold from the final payment an amount not to exceed 150% of the disputed amount. If any liens are filed or exist after Final Payment is made, the Contractor shall refund to the District all money that the District may be compelled to pay in discharging such liens, including all costs and reasonable attorney's fees.

5.69 FINAL RELEASE

Final payment to the Contractor in accordance with the approved final estimate is contingent upon the Contractor furnishing the District with a signed written waiver and release of all claims against the District arising out of or in any way connected to the Contract. Disputed Contract claims in stated amounts may be specifically excluded by the Contractor from the operation of the waiver and release. The waiver and release shall be substantially in the form provided in Civil Code sections 8138 (Exhibit A) or 8136 (Exhibit B). The Contractor may only use the conditional waiver and release form if the District does not pay all or a portion of the final payment estimate submitted by the Contractor and the Contractor disputes the District's determination on such estimate. In the event the Contractor fails to furnish the District with a signed written waiver and release of all claims against the District arising out of or in any way connected to the Contract, Contractor's acceptance of final payment is Contractor's release of all claims against the District to the fullest extent permitted by law.

UNCONDITIONAL WAIVER AND RELEASE ON FINAL PAYMENT (EXHIBIT A)

NOTICE TO CLAIMANT: THIS DOCUMENT WAIVES AND RELEASES LIEN, STOP PAYMENT NOTICE, AND PAYMENT BOND RIGHTS UNCONDITIONALLY AND STATES THAT YOU HAVE BEEN PAID FOR GIVING UP THOSE RIGHTS. THIS DOCUMENT IS ENFORCEABLE AGAINST YOU IF YOU SIGN IT, EVEN IF YOU HAVE NOT BEEN PAID. IF YOU HAVE NOT BEEN PAID, USE A CONDITIONAL WAIVER AND RELEASE FORM.

Identifying Information

Name of Claimant: _____
Name of Customer: _____
Job Location: _____
Owner: _____

Unconditional Waiver and Release

This document waives and releases lien, stop payment notice, and payment bond rights the claimant has for all labor and service provided, and equipment and material delivered, to the customer on this job. Rights based upon labor or service provided, or equipment or material delivered, pursuant to a written change order that has been fully executed by the parties prior to the date that this document is signed by the claimant, are waived and released by this document, unless listed as an Exception below. The claimant has been paid in full.

Exceptions
This document does not affect any of the following:
Disputed claims for extras in the amount of: $ _____

Signature
Claimant's Signature: _____
Claimant's Title: _____
Date of Signature: _____

CONDITIONAL WAIVER AND RELEASE ON FINAL PAYMENT (EXHIBIT B)

NOTICE: THIS DOCUMENT WAIVES THE CLAIMANT'S LIEN, STOP PAYMENT NOTICE, AND PAYMENT BOND RIGHTS EFFECTIVE ON RECEIPT OF PAYMENT. A PERSON SHOULD NOT RELY ON THIS DOCUMENT UNLESS SATISFIED THAT THE CLAIMANT HAS RECEIVED PAYMENT.

Identifying Information
Name of Claimant: _____
Name of Customer: _____
Job Location: _____
Owner: _____

Conditional Waiver and Release

This document waives and releases lien, stop payment notice, and payment bond rights the claimant has for labor and service provided, and equipment and material delivered, to the customer on this job. Rights based upon labor or service provided, or equipment or material delivered, pursuant to a written change order that has been fully executed by the parties prior to the date that this document is signed by the claimant, are waived and released by this document, unless listed as an Exception below. This document is effective only on the claimant's receipt of payment from the financial institution on which the following check is drawn:
Maker of Check: _____
Amount of Check: $ _____
Check Payable to: _____

Exceptions
This document does not affect any of the following:
Disputed claims for extras in the amount of: $_____

Signature
Claimant's Signature: _____
Claimant's Title: _____
Date of Signature: _____

5.70 RIGHT TO WITHHOLD PAYMENTS

In addition to all other rights and remedies of the District hereunder and by virtue of law, the District may withhold or nullify the whole or any part of any progress payment or withhold up to 150% of the disputed amount from the final payment (see Public Contract Code section 7107(c)) to such extent as may reasonably be necessary to protect the District from loss on account of:

5.70.1 Defective work not remedied, irrespective of when any such work be found to be defective;

5.70.2 Claims or liens filed or reasonable evidence indicating probable filing of claims or liens including, but not limited to, claims under California Labor Code sections 1775, 1776, or 1777.7;

5.70.3 Failure of the Contractor to make payments properly for labor, materials, equipment, or other facilities, or to subcontractors and/or suppliers;

5.70.4 A reasonable doubt that the work can be completed for the balance then unearned;

5.70.5 A reasonable doubt that the Contractor will complete the work within the agreed time limits;

5.70.6 Costs to the District resulting from failure of the Contractor to complete the work within the proper time; or

5.70.7 Damage to work or property.

Whenever the District shall, in accordance herewith, withhold any monies otherwise due the Contractor, written notice of the amount withheld and the reasons therefor will be given the Contractor. After the Contractor has corrected the enumerated deficiencies, the District will promptly pay to the Contractor the amount so withheld. When monies are withheld to protect the District against claims or liens of mechanics, suppliers, materialmen, subcontractors, etc., the District may at its discretion permit the Contractor to deliver a surety bond in terms and amount satisfactory to the District, indemnifying the District against any loss or expense, and upon acceptance thereof by the District, the District shall release to the Contractor monies so withheld.

5.71 WAIVER OF INTEREST

The District shall have no obligation to pay and the Contractor hereby waives the right to recover interest with regard to monies that the District is required to withhold by reason of judgment, order, statute or judicial process, or may withhold pursuant to the provisions of this Contract.

5.72 SATISFACTION OF CLAIMS AND LIENS

Neither the final payment nor any part of the retained percentage shall become due until the Contractor, if required, shall deliver to the District, a complete release of all liens and claims

arising out of this Contract, or receipts in full in lieu thereof and, if required in either case, an affidavit that so far as it has knowledge or information the releases and receipts include all the labor and material for which a lien or claim could be filed; but the Contractor may, if any subcontractor refuses to furnish a release or receipt in full, furnish a bond satisfactory to the District, to indemnify the District against any lien or claim. If any lien or claim remains unsatisfied after all payments are made, the Contractor shall refund to the District all monies that the latter may be compelled to pay in discharging such a lien, or claim, including all costs and reasonable attorney's fees.

5.73 ASSIGNMENT OF ANTI-TRUST CLAIMS

In accordance with California Public Contract Code section 7103.5, the Contractor hereby offers and agrees to assign to the District all rights, title, and interest in and to all causes of action it may have under section 4 of the Clayton Act (15 U.S.C. section 15) or under the Cartwright Act (Chapter 2 (commencing with section 16700) of part 2 of division 7 of the Business and Professions Code), arising from purchases of goods, services, or materials pursuant to the Contract Documents. This assignment shall be made and become effective at the time the District tenders final payment to the Contractor, without further acknowledgment by the parties.

5.74 AVAILABILITY AND AUDIT OF INFORMATION

5.74.1 The District's duly authorized representatives shall have, during the term of the Contract and for three years thereafter, the right to inspect, copy and audit all of the Contractor's and its subcontractors' books, accounts, records, and other material of all description, including but not limited to source documents and computer files, and to interview personnel, pertaining to the Contract to verify or review the quantity, quality, work program and progress of the work, reimbursable costs, amounts claimed by the Contractor, pricing data, estimates of cost for fixed rates including those applicable to proposed changes, and for any other reasonable purposes. “Books,” “accounts,” and “records” as used herein shall include, but not be limited to, original estimates, subcontracts, bids, proposals, purchase orders, books, documents, accounting records, papers, correspondence, project files and scheduling information, including the original Bid and all documents related thereto and to its preparation, the as-planned construction schedule and any related documents.

5.74.2 The Contractor's and its subcontractors' accounts shall be kept in accordance with generally accepted accounting principles in the particular industry and shall be kept in such a manner and in sufficient detail to clearly disclose the nature and amounts of the different items of service and cost pertaining to the Contract and the basis for charges or allocations to the Contract. The Contractor and its subcontractors shall preserve all such accounts and records for a period of three years after the term of the Contract.

5.74.3 The Contractor shall include the necessary provisions in its subcontracts to ensure that its subcontractors comply with this provision.

5.74.4 The parties acknowledge that this Contract, and performance and payments under this Contract, are subject to examination and audit by the State Auditor

General for three years following final payment under this Contract pursuant to California Government Code section 8546.7.

5.75 INTEGRATION

The Contract Documents constitute the sole, final, complete, exclusive and integrated expression and statement of the terms of this contract among the parties concerning the subject matter addressed herein, and supersedes all prior negotiations, representations or agreements, either oral or written, that may be related to the subject matter of this Contract, except those other documents that are expressly referenced in the Contract Documents.

5.76 COUNTERPARTS AND ELECTRONIC SIGNATURES

The Contract Documents may be executed in two or more counterparts, each of which shall be deemed an original, but all of which together shall constitute the same instrument or instruments. Counterparts may be delivered by facsimile, electronic mail (including PDF or any electronic signature complying with California's Uniform Electronic Transactions Act (Civ. Code, §1633.1, et seq.) or any other applicable law) or other transmission method. The parties agree that any electronic signatures appearing on the Contract Documents are the same as handwritten signatures for the purposes of validity, enforceability, and admissibility.

5.77 WAIVER

The waiver at any time by any party of its rights with respect to a default or other matter arising in connection with this Contract shall not be deemed a waiver with respect to any subsequent default or matter.

5.78 REMEDIES NOT EXCLUSIVE

The remedies provided in this Contract are cumulative and not exclusive, and are in addition to any other remedies that may be provided by law or equity. The exercise by either party of any remedy under this Contract shall be without prejudice to the enforcement of any other remedy.

5.79 SEVERABILITY

The invalidity, illegality or unenforceability of any provision of the Contract Documents shall not render the other provisions unenforceable, invalid or illegal.

5.80 GOVERNING LAW AND VENUE

Except as otherwise required by law, this Contract shall be interpreted, governed by, and construed under the laws of the State of California. The County shall be venue for any litigation concerning the enforcement or construction of this Contract.

5.81 NOTICES

Any notice, demand, invoice or other communication required or permitted to be given under this Contract shall be in writing and either served personally or sent by prepaid, first class U.S. mail and addressed as follows: for the District, either to the Engineer or the District at the addresses set forth in the Invitation to Bid; for the Contractor, at the address set forth in its Bid. Any party may change its address by notifying the other party in writing of the change of address.

(END OF GENERAL CONDITIONS.)

SECTION 6 - SPECIAL PROVISIONS

6.1 PROPOSITION 68 – STATE PARKS GRANT REQUIREMENTS

SIERRA CREEK PARK PROJECT

Statewide Park Development and Community Revitalization Program

Project No. SW-34-011 | State Contract No. C5054083

Sierra Creek Park is funded in part through the California Department of Parks and Recreation, Statewide Park Development and Community Revitalization Program, pursuant to Proposition 68, the California Drought, Water, Parks, Climate, Coastal Protection, and Outdoor Access for All Act of 2018. The Contractor and all subcontractors shall comply with all applicable requirements associated with the State grant, including the requirements identified below, to the extent applicable to the contracted work.

1. COMPLIANCE WITH APPLICABLE LAWS

Contractor shall comply with all applicable federal, State, and local laws, codes, and regulations affecting construction of the Project, including applicable construction contract requirements, building codes, health and safety codes, and accessibility requirements.

2. CALIFORNIA LABOR CODE / PREVAILING WAGE REQUIREMENTS

Contracted work shall comply with applicable California Labor Code requirements, including the requirements identified in California Labor Code section 1771.5 and other prevailing wage requirements applicable to the Project.

3. GRANT SCOPE AND APPROVED PROJECT

Contractor shall construct the Project in accordance with the approved plans, specifications, and Contract Documents. Work funded through the State grant shall remain consistent with the approved Grant Scope/Cost Estimate and applicable project elements approved by California State Parks. Changes in the GRANT SCOPE(S) must be approved in writing by the STATE. The District, as GRANTEE, shall complete the GRANT SCOPE(S) in accordance with the time of the Performance Period set forth in the State Grant Contract and under the terms and conditions of that Contract.

4. ACCESSIBILITY

The Project shall comply with all applicable accessibility requirements, including the Americans with Disabilities Act, applicable California accessibility requirements, and requirements for an accessible path of travel.

5. INSURANCE, BONDS, AND SECURITY

Contractor shall maintain all insurance, bonds, and other security required by the Contract Documents. Such requirements are intended, among other purposes, to protect the District and the State from poor workmanship, fraud, and other potential loss associated with completion of the Project.

6. PROPOSITION 68 / BOND ACT SIGNAGE

Contractor shall cooperate with the District in the maintenance of all State-required Proposition 68 / Bond Act acknowledgement signage associated with the Project. Signage has been installed at the location directed or approved by the District and in accordance with California State Parks requirements.

7. RECORDS AND DOCUMENTATION

Contractor and subcontractors shall maintain and provide to the District, upon request, records reasonably necessary for the District to document compliance with the State grant, including contracts, subcontracts, invoices, progress billings, change orders, payment documentation, and other Project expenditure records.

8. INSPECTION AND COOPERATION

Contractor shall cooperate with inspections and requests for Project information by the District and, when applicable, representatives of the California Department of Parks and Recreation. Contractor shall provide reasonable access to the Project and relevant Project documentation as required by the District.

9. NONDISCRIMINATION

Contractor shall comply with all applicable nondiscrimination requirements in performance of the Project.

10. CONTRACTOR RESPONSIBILITY

Compliance with these requirements is part of Contractor's obligations under the Contract Documents. Contractor shall promptly notify the District of any circumstance that may affect compliance with an applicable State grant requirement or the approved Project scope.

DISTRICT / GRANTEE RESPONSIBILITIES

Nothing in these requirements transfers to the Contractor responsibilities that are assigned exclusively to the District as Grantee under the State Grant Contract, including grant reimbursement requests, State reporting, grant accounting, deed restriction requirements, or other administrative obligations of the Grantee.

REFERENCE DOCUMENTS

- California Department of Parks and Recreation, Grant Administration Guide for Competitive Grant Programs, September 2020.
- Statewide Park Development and Community Revitalization Grant Contract, Sierra Creek Park, Contract No. C5054083, including amendments.

6.3 BID ITEM DESCRIPTIONS (ON-SITE)

BID ITEM DESCRIPTIONS
The descriptions below are general descriptions and do not include estimated quantities. See plans and bid summary for estimated quantities. Estimated quantities are provided as a courtesy only. Actual numbers and quantities of symbols on plans prevail.

BID ITEM LIST – ON-SITE WORK

A - SITE PREPARATION

Bid Item A1 – Demolition / Clear and Grub:
The square foot price bid for this item shall include full compensation for furnishing all labor, materials, tools, equipment and incidentals; for doing all work involved in site clearing and grubbing, including removal of plants, weeds, surface materials, and other miscellaneous demolition items. This includes clear and grub operations to be done by hand (no machinery allowed) as specified in the Specifications and Plans.

Bid Item A2 – Temporary Erosion & Sediment Control:
The acreage price bid for this item shall include all costs for temporary erosion and sediment control. The item also includes labor, materials and all other work required by the Drawings and Specifications which is not specifically set forth in the Bid Form as a pay item.

Bid Item A3 – Site Grading (Rough/Fine):
The square foot price bid for this item shall include full compensation for furnishing all labor, materials, tools, equipment, and incidentals; and for performing all work involved in site grading, including rough grading, fine grading, excavation, placement and compaction of suitable on-site materials, redistribution of existing soil, shaping, contouring, slope grading, finish grading, scarification, moisture conditioning, grading adjustments, and preparation of subgrades to the lines, grades, elevations, and slopes indicated on the Drawings. The item shall include coordination with proposed site improvements, drainage features, paving, planting areas, and other improvements; removal of minor unsuitable materials within the grading limits as required; and all appurtenant work necessary to achieve the finished grades shown on the Drawings, as specified in the Specifications and Plans. The bid price shall also include all labor, equipment, materials, and other work required by the Drawings and Specifications that is not specifically identified as a separate pay item.

Bid Item A4 - Tree Removal:
The unit price bid for this item shall include full compensation for furnishing all permits, labor, materials, tools, equipment and incidentals; for doing all work involved in tree removal, including soil clearing, grubbing and removal to the depth below finish grade as specified in the Specifications and Plans.

Bid Item A5 - Tree Protection:
The linear foot price bid for this item shall include full compensation for furnishing all labor, materials, tools, equipment, and incidentals; and for performing all work involved in furnishing and installing tree protection fencing, (including procurement, delivery, layout, installation, posts, fence fabric, supports, hardware, signage), and maintenance including watering and washing off dust weekly, and disposal at the completion of construction, and all appurtenant work necessary to provide complete tree protection fencing at the locations indicated on the Drawings, as specified in the Specifications and Plans. The bid price shall also include all labor, equipment, materials, and other work required by the Drawings and Specifications that is not specifically identified as a separate pay item.

Bid Item A6 - Construction Fencing:

The linear foot price bid for this item shall include all costs for purchase, delivery, installation, and maintenance of the construction fence at top of creek and along Watt Ave as indicated on the Drawings. The item also includes labor, equipment, materials, tools, equipment, and incidentals and for doing all the work required by the Drawings and Specifications, which is not specifically set forth in the Bid Form as a pay item.

Bid Item A7 - Removal of Existing Planter / Wall:
The lump sum price bid for this item shall include full compensation for furnishing all labor, materials, tools, equipment, and incidentals; for doing all work involved in removal and disposal of existing planters and wall, including removal of entire planters and wall structures and footings, as specified in the Specifications and Plans.

Bid Item A8 - Removal of Existing Signage and Metal Bollards:
The lump sum price bid for this item shall include full compensation for furnishing all labor, materials, tools, equipment, and incidentals; for doing all work involved in removal and disposal of existing miscellaneous signage metal bollards including footings as indicated on Drawings, including removal of structures and footings, as specified in the Specifications and Plans.

B – UTILITIES

Bid Item B1 - Domestic Water Service to Building:
The lump sum price bid for this item shall include full compensation for furnishing all labor, materials, tools, equipment, and incidentals; and for performing all work involved in furnishing and installing a complete domestic water service system to the restroom building, including procurement, delivery, trenching, excavation, installation of water meter and reduced pressure backflow, bedding, piping, fittings, valves, sleeves, tracer wire, backfill, compaction, connections, testing, flushing, disinfection, restoration of disturbed areas, and all appurtenant work necessary to provide a complete and fully operational domestic water service system in the locations indicated on the Drawings, as specified in the Specifications and Plans. The bid price shall also include all labor, equipment, materials, and other work required by the Drawings and Specifications that is not specifically identified as a separate pay item.

Bid Item B2 - Domestic Water Service tie-in to street:
The unit price bid for this item shall include full compensation for furnishing all labor, materials, tools, equipment, and incidentals; and for performing all work involved in connecting the domestic water service to the existing public water main, including procurement, delivery, excavation, trenching, fittings, valves, tapping sleeve and valve where required, service saddle, piping, connections, testing, flushing, disinfection, coordination with the water purveyor, restoration of disturbed improvements, and all appurtenant work necessary to provide a complete and operational domestic water service connection, as indicated on the Drawings and specified in the Specifications and Plans. The bid price shall also include all labor, equipment, materials, and other work required by the Drawings and Specifications that is not specifically identified as a separate pay item.

Bid Item B3 - Sewer line connection:
The allowance for this item shall include full compensation for furnishing all labor, materials, tools, equipment, permits, fees, and incidentals; and for performing all work associated with providing the sewer line connection for the restroom building, including excavation, trenching, shoring as required, subgrade preparation, bedding, sanitary sewer piping, fittings, cleanouts, connections to the restroom building and existing sewer system, testing, inspection, backfill, compaction, surface restoration, and all appurtenant work necessary to complete the sewer connection, as shown on the Drawings and specified in the Specifications and Plans. The allowance shall be used as directed by the District and adjusted based on the actual cost of the work performed.

Bid Item B4 - Drinking Fountain hookups:
The unit price bid for this item shall include full compensation for furnishing all labor, materials, tools, equipment, and incidentals; and for performing all work involved in providing drinking fountain hookups,

including excavation, trenching, subgrade preparation, bedding, backfill, domestic water service piping, fittings, valves, isolation valves, pressure regulator as required, sanitary waste piping and fittings, cleanouts, connections to existing or proposed water and sanitary systems, testing, flushing, disinfection, and all appurtenant work necessary to provide complete and operational drinking fountain connections at the locations shown on the Drawings, as specified in the Specifications and Plans.

Bid Item B5 - Storm Drainage Infrastructure:
The lump sum bid for this item shall include full compensation for furnishing all labor, materials, tools, equipment, and incidentals, and for performing all work necessary to furnish and install a complete and functional storm drainage system for the park, including excavation, trenching, subgrade preparation, pipe bedding, storm drain piping, fittings, connections, 24-inch by 24-inch storm drain catch basins with grates, parking lot catch basins, storm drain structures, bubble-up drains, outlet structures, connections and discharge to the vegetated swale and stormwater planters, aggregate backfill, concrete, reinforcement, adjustment of grates and frames to finished grade, testing, and all other appurtenant work necessary to complete the storm drainage system at the locations shown on the Drawings and as specified in the Plans and Specifications.

C – HARDSCAPE

Bid Item C1 - Asphalt Pavement for Parking Lot with Aggregate Base:
The square foot price bid for this item shall include full compensation for furnishing all labor, materials, tools, equipment and incidentals; for doing all work involved in procurement and installation of pavement (HMA) for the parking lot, including installation and preparation of sub-grade, aggregate base and asphalt surfacing to the depths, any manufacturer required vapor barriers, as specified in the Specifications and Plans.

Bid Item C2 - GraniteCrete Pathway (w/ Aggregate Base):
The square foot price bid for this item shall include all costs for purchase, delivery, and installation (per manufacturers recommendation) of stabilized decomposed granite, subgrade preparation, aggregate base, and stabilizer in the areas indicated on the Drawings. The item also includes labor, equipment, materials, and all other work required by the Drawings and Specifications which is not specifically set forth in the Bid Form as a pay item.

Bid Item C3 - Concrete Seatwalls (at Entry Plaza):
The linear foot price bid for this item shall include full compensation for furnishing all labor, materials, tools, equipment, and incidentals; and for performing all work involved in furnishing and installing the concrete seatwall at the Entry Plaza, including excavation, subgrade preparation, reinforcement, forming, compaction, concrete placement, concrete additives, sealers, finishing, control and expansion joints, and all appurtenant work, complete in place, in the locations indicated on the Drawings, as specified in the Specifications and Plans.

Bid Item C4 - Concrete Retaining Walls (at Amphitheater):
The linear foot price bid for this item shall include full compensation for furnishing all labor, materials, tools, equipment, and incidentals; and for performing all work involved in furnishing and installing the concrete retaining walls with integral color at the amphitheater, including excavation, subgrade preparation, foundation preparation, reinforcement, forming, concrete placement, concrete additives, sealers, drainage materials, weep holes, perforated drain pipe, backfill, compaction, finishing, control and expansion joints, and all appurtenant work necessary to construct the retaining wall complete in place, in the locations indicated on the Drawings, as specified in the Specifications and Plans.

Bid Item C5 - Concrete Pavement (w/ Aggregate Base):
The square foot price bid for this item shall include full compensation for furnishing all labor, materials, tools, equipment, and incidentals; and for performing all work involved in constructing concrete flatwork, including excavation, subgrade preparation, subgrade compaction, aggregate base, reinforcement, forming, concrete

placement, concrete additives, finishing, curing, sealers, control and expansion joints, joint sealants, and all appurtenant work necessary to complete the installation in the locations shown on the Drawings, as specified in the Specifications and Plans.

Bid Item C6 - Concrete Pavement - Vehicular (w/ Aggregate Base):
The square foot price bid for this item shall include full compensation for furnishing all labor, materials, tools, equipment, and incidentals; and for performing all work involved in constructing concrete flatwork - vehicular, including excavation, subgrade preparation, subgrade compaction, aggregate base, reinforcement, forming, concrete placement, concrete additives, finishing, curing, sealers, control and expansion joints, joint sealants, and all appurtenant work necessary to complete the installation in the locations shown on the Drawings, as specified in the Specifications and Plans.

Bid Item C7 - Colored Concrete Pavement (aggregate Base):
The square foot price bid for this item shall include full compensation for furnishing all labor, materials, tools, equipment, and incidentals; and for performing all work involved in constructing integrally colored concrete flatwork, including excavation, subgrade preparation, subgrade compaction, aggregate base, reinforcement where specified, forming, integral color admixtures, concrete placement, concrete additives, finishing, curing, sealers, control and expansion joints, joint sealants, and all appurtenant work necessary to complete the installation in the locations shown on the Drawings, as specified in the Specifications and Plans.

Bid Item C8 - Colored Concrete Pavement - Vehicular (w/ Aggregate Base):
The square foot price bid for this item shall include full compensation for furnishing all labor, materials, tools, equipment, and incidentals; and for performing all work involved in constructing integrally colored concrete flatwork - vehicular, including excavation, subgrade preparation, subgrade compaction, aggregate base, reinforcement where specified, forming, integral color admixtures, concrete placement, concrete additives, finishing, curing, sealers, control and expansion joints, joint sealants, and all appurtenant work necessary to complete the installation in the locations shown on the Drawings, as specified in the Specifications and Plans.

Bid Item C9 - Concrete Playground Edge :
The linear foot price bid for this item shall include full compensation for furnishing all labor, materials, tools, equipment, and incidentals; and for performing all work involved in constructing the cast-in-place concrete edge for playground safety surfacing containment, including excavation, subgrade preparation, subgrade compaction, aggregate base, reinforcement, forming, concrete placement, concrete additives, finishing, curing, sealers, control and expansion joints, joint sealants, backfill, cleanup, and all appurtenant work necessary to complete the installation in the locations shown on the Drawings, as specified in the Specifications and Plans.

Bid Item C10 - Ornamental Metal Fence-60" ht (at Garden):
The linear foot price bid for this item shall include full compensation for furnishing all labor, materials, tools, equipment, and incidentals; and for performing all work involved in furnishing and installing the 5-foot-high ornamental metal fence at Garden, including shop drawings, fabrication, purchase, delivery, posts, rails, pickets, fittings, hardware, footings, concrete, surface preparation, factory and field-applied coatings, paint and finishes, and installation in accordance with the manufacturer's recommendations, complete in place at the locations shown on the Drawings, as specified in the Specifications and Plans. The bid price shall also include all appurtenant work necessary to provide a complete and functional fence system.

Bid Item C11 - Ornamental Metal Fence-48" ht (at Watt Ave.):
The linear foot price bid for this item shall include full compensation for furnishing all labor, materials, tools, equipment, and incidentals; and for performing all work involved in furnishing and installing the 4-foot-high ornamental metal fence at Watt Ave, including shop drawings, fabrication, purchase, delivery, posts, rails, pickets, fittings, hardware, footings, concrete, surface preparation, factory and field-applied coatings, paint and

finishes, and installation in accordance with the manufacturer's recommendations, complete in place at the locations shown on the Drawings, as specified in the Specifications and Plans. The bid price shall also include all appurtenant work necessary to provide a complete and functional fence system.

Bid Item C12 - Ornamental Pedestrian Gates-60" ht (at Garden):
The unit price bid for this item shall include full compensation for furnishing all labor, materials, tools, equipment, and incidentals; and for performing all work involved in furnishing and installing the pedestrian gate at Garden, including shop drawings, fabrication, purchase, delivery, gate frame, pickets, posts, footings, concrete, hinges, latch assemblies, locking devices, stops, fittings, hardware, surface preparation, factory and field-applied coatings, paint and finishes, and installation in accordance with the manufacturer's recommendations, complete in place at the locations shown on the Drawings, as specified in the Specifications and Plans. The bid price shall also include all appurtenant work necessary to provide a complete and functional gate system.

Bid Item C13 - Ornamental Vehicular Gates-60" ht (at Garden):
The unit price bid for this item shall include full compensation for furnishing all labor, materials, tools, equipment, and incidentals; and for performing all work involved in furnishing and installing the vehicular gate at Garden, including shop drawings, fabrication, purchase, delivery, gate frame, pickets, posts, footings, concrete, hinges, latch assemblies, locking devices, stops, fittings, hardware, surface preparation, factory and field-applied coatings, paint and finishes, and installation in accordance with the manufacturer's recommendations, complete in place at the locations shown on the Drawings, as specified in the Specifications and Plans. The bid price shall also include all appurtenant work necessary to provide a complete and functional gate system.

Bid Item C14 - 12" Concrete Mow Band
The linear foot price bid for this item shall include full compensation for furnishing all labor, materials, tools, equipment, and incidentals; and for performing all work involved in furnishing and installing the 12-inch-wide concrete mow band, including excavation, soil preparation, subgrade preparation, subgrade compaction, aggregate base where required, forming, reinforcement, concrete placement, concrete additives, sealers, finish treatment, curing, control and expansion joints, joint sealants, and all appurtenant work necessary to complete the installation in the locations indicated on the Drawings and beneath all fencing except where specifically excluded. The bid price shall also include all labor, equipment, materials, and other work required by the Drawings and Specifications that is not specifically identified as a separate pay item.

Bid Item C15 - 18" Concrete Mow Band under Ornamental Fence (at Watt Ave):
The linear foot price bid for this item shall include full compensation for furnishing all labor, materials, tools, equipment, and incidentals; and for performing all work involved in furnishing and installing the 18-inch-wide concrete mow band beneath fencing along Watt Ave, including excavation, soil preparation, subgrade preparation, subgrade compaction, aggregate base where required, forming, reinforcement, concrete placement, concrete additives, sealers, finish treatment, curing, control and expansion joints, joint sealants, and all appurtenant work necessary to complete the installation in the locations indicated on the Drawings and beneath all fencing except where specifically excluded. The bid price shall also include all labor, equipment, materials, and other work required by the Drawings and Specifications that is not specifically identified as a separate pay item.

Bid Item C16 - Parking Lot Striping:
The lump sum price bid for this item shall include full compensation for furnishing all labor, materials, tools, equipment, and incidentals; and for performing all work involved in furnishing and applying parking lot striping, including layout, field measurement, surface preparation, cleaning, traffic control, application of paint or striping materials, markings, symbols, arrows, accessibility markings, and all other pavement markings indicated on the Drawings. The bid price shall include all labor, equipment, materials, and other work required by the Drawings and Specifications necessary to provide a complete and properly installed striping system.

Bid Item C17 - Concrete Wheel Stop:
The unit price bid for this item shall include full compensation for furnishing all labor, materials, tools, equipment, and incidentals; and for performing all work involved in furnishing and installing precast concrete wheel stops, including purchase, delivery, layout, placement, anchoring, concrete anchors, drilling, installation, alignment, and all appurtenant work necessary to provide complete and functional wheel stops at the locations indicated on the Drawings, as specified in the Specifications and Plans. The bid price shall also include all labor, equipment, materials, and other work required by the Drawings and Specifications that is not specifically identified as a separate pay item.

Bid Item C18 - Gravel Service Drive (at Garden):
The square foot price bid for this item shall include full compensation for furnishing all labor, materials, tools, equipment, and incidentals; and for performing all work involved in constructing the gravel service drive at Garden, including excavation, grading, subgrade preparation, subgrade compaction, geotextile fabric where specified, aggregate base or gravel surfacing material, placement, spreading, grading, watering, compaction, and final surface preparation, complete in place in the locations indicated on the Drawings, as specified in the Specifications and Plans. The bid price shall also include all labor, equipment, materials, and other work required by the Drawings and Specifications that is not specifically identified as a separate pay item.

Bid Item C19 - ADA Curb Ramp with truncated domes (CalTrans Case C):
The unit price bid for this item shall include full compensation for furnishing all labor, materials, tools, equipment, and incidentals; and for performing all work involved in constructing ADA curb ramp improvements (Caltrans Case C), including layout, excavation, subgrade preparation, subgrade compaction, aggregate base, forming, reinforcement where specified, concrete placement, finishing, curing, detectable warning surface with truncated domes, and all appurtenant work necessary to provide a complete and accessible curb ramp installation at the locations indicated on the Drawings, as specified in the Specifications and Plans.

Bid Item C20 - Vertical Curb / Retaining wall:
The unit price bid for this item shall include full compensation for furnishing all labor, materials, tools, equipment, and incidentals; and for performing all work involved in constructing vertical retaining curb, including excavation, subgrade preparation, subgrade compaction, aggregate base, reinforcement, forming, concrete placement, finishing, curing, control and expansion joints, joint sealants, backfill, and all appurtenant work necessary to complete the installation at the locations shown on the Drawings, as specified in the Specifications and Plans.

Bid Item C21 - Culvert Feature (Culvert, Concrete Walls, Fill, Concrete Pavement):
The linear foot price bid for this item shall include full compensation for furnishing all labor, materials, tools, equipment, and incidentals; and for performing all work involved in furnishing and constructing the concrete culvert system, including excavation, removal and disposal of unsuitable materials, subgrade preparation, soil preparation, compaction, furnishing and installation of culvert structure, cast-in-place concrete walls, headwalls, wingwalls, footings, reinforcing steel, concrete pavement, concrete curbs, transitions, joints, formwork, curing, backfill, structural fill, placement and compaction of fill materials, and all associated drainage improvements as indicated on the Drawings and specified in the Specifications.

D – FURNISHINGS / EQUIPMENT / STRUCTURES

Bid Item D1 - Bench - Backed - Outdoor Creations:
The unit price bid for this item shall include full compensation for furnishing all labor, materials, tools, equipment, and incidentals; and for performing all work involved in furnishing and installing backed benches, including shop drawings, procurement, delivery, assembly, installation, anchorage, hardware, surface preparation, protective coatings and finishes, and all appurtenant work necessary to provide a complete and functional bench installation in the locations indicated on the Drawings, as specified in the Specifications and Plans.

Bid Item D2 - Bench - Backless - Outdoor Creations:
The unit price bid for this item shall include full compensation for furnishing all labor, materials, tools, equipment, and incidentals; and for performing all work involved in furnishing and installing backless benches, including shop drawings, procurement, delivery, assembly, installation, anchorage, hardware, surface preparation, protective coatings and finishes, and all appurtenant work necessary to provide a complete and functional bench installation in the locations indicated on the Drawings, as specified in the Specifications and Plans.

Bid Item D3 - Trash and Recycling Receptacles - BearSaver:
The unit price bid for this item shall include full compensation for furnishing all labor, materials, tools, equipment, and incidentals; and for performing all work involved in furnishing and installing trash and recycling receptacles, including shop drawings, procurement, delivery, assembly, installation, anchorage, hardware, surface preparation, protective coatings and finishes, and all appurtenant work necessary to provide a complete and functional bench installation in the locations indicated on the Drawings, as specified in the Specifications and Plans.

Bid Item D4 - Picnic Table - (Accessible) - Outdoor Creations:
The unit price bid for this item shall include full compensation for furnishing all labor, materials, tools, equipment, and incidentals; and for performing all work involved in furnishing and installing accessible picnic tables, including shop drawings, procurement, delivery, assembly, installation, anchorage, hardware, surface preparation, protective coatings and finishes, and all appurtenant work necessary to provide a complete and functional bench installation in the locations indicated on the Drawings, as specified in the Specifications and Plans.

Bid Item D5 - Picnic Table - (Standard) - Outdoor Creations:
The unit price bid for this item shall include full compensation for furnishing all labor, materials, tools, equipment, and incidentals; and for performing all work involved in furnishing and installing standard picnic tables, including shop drawings, procurement, delivery, assembly, installation, anchorage, hardware, surface preparation, protective coatings and finishes, and all appurtenant work necessary to provide a complete and functional bench installation in the locations indicated on the Drawings, as specified in the Specifications and Plans.

Bid Item D6 - Round Picnic Table (Accessible):
The unit price bid for this item shall include full compensation for furnishing all labor, materials, tools, equipment, and incidentals; and for performing all work involved in furnishing and installing an accessible round picnic table, including shop drawings, procurement, delivery, assembly, installation, anchorage, hardware, surface preparation, protective coatings and finishes, and all appurtenant work necessary to provide a complete and functional bench installation in the locations indicated on the Drawings, as specified in the Specifications and Plans.

Bid Item D7 - Round Picnic Table:
The unit price bid for this item shall include full compensation for furnishing all labor, materials, tools, equipment, and incidentals; and for performing all work involved in furnishing and installing a round picnic table, including shop drawings, procurement, delivery, assembly, installation, anchorage, hardware, surface preparation, protective coatings and finishes, and all appurtenant work necessary to provide a complete and functional bench installation in the locations indicated on the Drawings, as specified in the Specifications and Plans.

Bid Item D8 - Park Sign - Outdoor Creations:
The unit price bid for this item shall include full compensation for furnishing all labor, materials, tools, equipment, and incidentals; and for performing all work involved in furnishing and installing the park sign, including shop drawings, procurement, delivery, excavation, soil preparation, subgrade preparation and compaction, concrete footing/foundation, reinforcement, anchorage, sign structure, lettering, graphics, coatings,

paint and surface preparation, finishes, assembly, installation in accordance with the manufacturer's recommendations, and all appurtenant work necessary to provide a complete and functional sign installation in the locations indicated on the Drawings, as specified in the Specifications and Plans. The bid price shall also include all labor, equipment, materials, and other work required by the Drawings and Specifications that is not specifically identified as a separate pay item.

Bid Item D9 - Barbecue Grill - Single - Dumor:
The unit price bid for this item shall include full compensation for furnishing all labor, materials, tools, equipment, and incidentals; and for performing all work involved in furnishing and installing a single barbecue grill, including shop drawings, procurement, delivery, assembly, installation, anchorage, concrete footings or foundations where specified, hardware, surface preparation, protective coatings and finishes, and all appurtenant work necessary to provide a complete and functional bench installation in the locations indicated on the Drawings, as specified in the Specifications and Plans.

Bid Item D10 - Barbecue Grill - Group - Dumor:
The unit price bid for this item shall include full compensation for furnishing all labor, materials, tools, equipment, and incidentals; and for performing all work involved in furnishing and installing a group barbecue grill, including shop drawings, procurement, delivery, assembly, installation, anchorage, concrete footings or foundations where specified, hardware, surface preparation, protective coatings and finishes, and all appurtenant work necessary to provide a complete and functional bench installation in the locations indicated on the Drawings, as specified in the Specifications and Plans.

Bid Item D11 - Bike Racks - Hoop - Dumor:
The unit price bid for this item shall include full compensation for furnishing all labor, materials, tools, equipment, and incidentals; and for performing all work involved in furnishing and installing bike racks, including shop drawings, procurement, delivery, assembly, installation, anchorage, hardware, surface preparation, protective coatings and finishes, and all appurtenant work necessary to provide a complete and functional bench installation in the locations indicated on the Drawings, as specified in the Specifications and Plans.

Bid Item D12 - Bike Lockers - Ground Control Systems:
The unit price bid for this item shall include full compensation for furnishing all labor, materials, tools, equipment, and incidentals; and for performing all work involved in furnishing and installing bike lockers, including shop drawings, procurement, delivery, assembly, installation, anchorage, hardware, surface preparation, protective coatings and finishes, and all appurtenant work necessary to provide a complete and functional bench installation in the locations indicated on the Drawings, as specified in the Specifications and Plans.

Bid Item D13 - Pet Waste Station:
The unit price bid for this item shall include full compensation for furnishing all labor, materials, tools, equipment, and incidentals; and for performing all work involved in furnishing and installing a dog waste station, including shop drawings, procurement, delivery, assembly, installation, anchorage, concrete footings or foundations where specified, hardware, surface preparation, protective coatings and finishes, and all appurtenant work necessary to provide a complete and functional bench installation in the locations indicated on the Drawings, as specified in the Specifications and Plans.

Bid Item D14 - Drinking Fountain w/Dog Bowl and Bottle Filler:
The unit price bid for this item shall include full compensation for furnishing all labor, materials, tools, equipment, and incidentals; and for performing all work involved in furnishing and installing the drinking fountain, including procurement, delivery, assembly, installation, plumbing connections, water supply connections, drainage connections, sump assembly, excavation, soil preparation, subgrade preparation and compaction, concrete pad or foundation, anchorage, testing, flushing, and all appurtenant work necessary to provide a complete and functional drinking fountain installation in the locations indicated on the Drawings, as

specified in the Specifications and Plans. The bid price shall also include all labor, equipment, materials, and other work required by the Drawings and Specifications that is not specifically identified as a separate pay item.

Bid Item D15 - Removable Bollards - Dumor:
The unit price bid for this item shall include full compensation for furnishing all labor, materials, tools, equipment, and incidentals; and for performing all work involved in furnishing and installing removable bollards with sleeves, including procurement, delivery, excavation, soil preparation, subgrade preparation and compaction, concrete footing/foundation, reinforcing steel where specified, steel sleeve assembly, bollard, locking mechanism, hardware, surface preparation, coatings and finishes, installation in accordance with the manufacturer's recommendations, and all appurtenant work necessary to provide a complete and functional removable bollard system at the locations indicated on the Drawings, as specified in the Specifications and Plans. The bid price shall also include all labor, equipment, materials, and other work required by the Drawings and Specifications that is not specifically identified as a separate pay item.

Bid Item D16 - Interpretive Signage:
The unit price bid for this item shall include full compensation for furnishing all labor, materials, tools, equipment, and incidentals; and for performing all work involved in furnishing and installing interpretive signs, including shop drawings, procurement, delivery, excavation, soil preparation, subgrade preparation and compaction, concrete footing/foundation, reinforcement and anchorage where specified, sign structure, posts, frame, interpretive panels, graphics, protective coatings, finishes, assembly, installation in accordance with the manufacturer's recommendations, and all appurtenant work necessary to provide a complete and functional interpretive sign installation at the locations indicated on the Drawings, as specified in the Specifications and Plans. The bid price shall also include all labor, equipment, materials, and other work required by the Drawings and Specifications that is not specifically identified as a separate pay item.

Bid Item D17 - ADA Parking Sign:
The unit price bid for this item shall include full compensation for furnishing all labor, materials, tools, equipment, and incidentals; and for performing all work involved in furnishing and installing ADA parking signs, including procurement, delivery, sign panel, lettering and graphics, sign post, mounting hardware, concrete footing/foundation, excavation, soil preparation, subgrade preparation and compaction, assembly, installation, and all appurtenant work necessary to provide a complete and functional ADA parking sign installation at the locations indicated on the Drawings, as specified in the Specifications and Plans. The bid price shall also include all labor, equipment, materials, and other work required by the Drawings and Specifications that is not specifically identified as a separate pay item.

E – PLAYGROUND AND FITNESS

Bid Item E1 - Play Equipment (including Tax and Freight), Foundation Design (Deferred Submittal to the County), and Installation:
The lump sum price bid for this item shall include full compensation for furnishing all labor, materials, tools, equipment, and incidentals; and for performing all work involved in furnishing and installing playground equipment, including procurement, manufacturer coordination, freight, delivery, unloading, storage, sales tax, assembly, anchorage, hardware, concrete footings/foundations design, excavation, formwork, concrete placement, site restoration, and all appurtenant work necessary to provide a complete and functional playground equipment system at the locations indicated on the Drawings and specified in the Specifications. The lump sum price shall also include all labor, equipment, materials, and other work required by the Drawings and Specifications that is not specifically identified as a separate pay item.

Bid Item E2 - P.I.P Safety Surfacing (at Playground ADA path & Fitness) with Aggregate Base:
The square foot price bid for this item shall include full compensation for furnishing all labor, materials, tools, equipment, and incidentals; and for performing all work involved in the procurement, delivery, and installation (per manufacturer’s recommendations) of rubberized surfacing for playground and fitness areas, including surface

preparation, excavation as required, subgrade preparation and compaction, aggregate base, adhesives, forming, cushioning base layer, wear layer, sealants, edge restraints, transitions, and all appurtenant work necessary to provide a complete and functional rubberized surfacing system in the areas indicated on the Drawings and specified in the Specifications and Plans. The bid price shall also include all labor, equipment, materials, and other work required by the Drawings and Specifications that is not specifically identified as a separate pay item.

Bid Item E3 - P.I.P Safety Surfacing (at Playground hill) over Concrete Base:
The square foot price bid for this item shall include full compensation for furnishing all labor, materials, tools, equipment, and incidentals; and for performing all work involved in the procurement, delivery, and installation (per manufacturer's recommendations) of rubberized surfacing for playground areas at playground hill, including concrete base, reinforcement, formwork, concrete placement, finishing, curing, surface preparation, cleaning, moisture testing, patching and leveling as required, primer, adhesives, forming, reinforcement, cushioning base layer, wear layer, sealants, and all appurtenant work necessary to provide a complete and functional rubberized surfacing system in the areas indicated on the Drawings and specified in the Specifications and Plans. The bid price shall also include all labor, equipment, materials, and other work required by the Drawings and Specifications that is not specifically identified as a separate pay item.

Bid Item E4 - EWF Safety Surfacing (at Playground):
The square foot price bid for this item shall include full compensation for furnishing all labor, materials, tools, equipment, and incidentals; and for performing all work involved in the procurement, delivery, placement, and installation of engineered wood fiber (EWF) playground surfacing, including site preparation, excavation as required, subgrade preparation and compaction, geotextile fabric, drainage improvements, filter fabric, containment borders/edging, transition areas, playground safety surfacing material, placement, grading, leveling, compaction, and all appurtenant work necessary to provide a complete and functional playground surfacing system at the locations indicated on the Drawings and specified in the Specifications and Plans. The bid price shall also include all labor, equipment, materials, and other work required by the Drawings and Specifications that is not specifically identified as a separate pay item.

Bid Item E5 - Fitness Equipment incl. tax, freight and installation:
The lump sum price bid for this item shall include full compensation for furnishing all labor, materials, tools, equipment, and incidentals; and for performing all work involved in furnishing and installing fitness equipment, including procurement, manufacturer coordination, freight, delivery, unloading, storage, sales tax, assembly, installation, anchorage, hardware, concrete footings/foundations, excavation, formwork, concrete placement, site restoration, and all appurtenant work necessary to provide a complete and functional playground equipment system at the locations indicated on the Drawings and specified in the Specifications. The lump sum price shall also include all labor, equipment, materials, and other work required by the Drawings and Specifications that is not specifically identified as a separate pay item.

F – STRUCTURES

Bid Item F1 - Base Preparation for Pre-Fab Restroom Building and Utility Connections:
The lump sum bid for this item shall include full compensation for furnishing all labor, materials, tools, equipment, and incidentals; and for performing all work involved in base preparation and utility connections for a pre-fabricated restroom building (provided by the District), including building pad preparation, subgrade preparation and compaction, aggregate base, foundation/base support, anchorage, and all utility work required for a complete and operational facility. Utility work shall include extending all utility lines to within 5-foot of the restroom building and making all final utility connections. Building pad preparation, subgrade improvement, compaction requirements, and aggregate base installation shall be performed in accordance with the Geotechnical Report recommendations, manufacturer's instructions, Drawings, and Specifications. The lump sum price shall also include all labor, equipment, materials, testing, permits, and other work required by the Drawings and Specifications that is not specifically identified as a separate pay item.

Bid Item F2 – Pedestrian Bridge (including Tax and Freight), Abutment Foundation Design (Deferred Submittal to the County), and Installation:

The lump sum bid for this item shall include full compensation for furnishing all labor, materials, tools, equipment, and incidentals; and for performing all work involved in installing the pre-fabricated truss pedestrian bridge, including site preparation, delivery coordination, unloading, handling, assembly, placement, lifting, setting, anchorage, foundations, concrete footings/abutments, reinforcing steel, formwork, excavation, subgrade preparation and compaction, aggregate base, approach transitions, grading adjustments, protection of the creek, restoration of disturbed areas, and all appurtenant work necessary to provide a complete and functional pedestrian bridge installation. Engineered drawings to be submitted to the County for permitting, including approval from CDFW if required. Foundation design, subgrade preparation, and compaction requirements shall be performed in accordance with the Geotechnical Report recommendations, approved manufacturer's instructions, Drawings, and Specifications. The lump sum price shall also include all labor, equipment, materials, testing, and other work required by the Drawings and Specifications that is not specifically identified as a separate pay item.

Bid Item F3 - Shade Structures including Installation:
The lump sum bid for this item shall include full compensation for furnishing all labor, materials, tools, equipment, and incidentals; and for performing all work involved in furnishing and installing (per manufacturer's recommendations) complete pre-fabricated metal shade structures, including structural steel/aluminum framing, columns, roof panels, metal shade components, hardware, connections, protective coatings/finishes, shop drawings, engineering, foundations, footings, excavation, subgrade preparation and compaction, concrete placement, reinforcing steel, anchorage, and all appurtenant work necessary to provide a complete and functional shade structure installation at the locations indicated on the Drawings and specified in the Specifications and Plans. Foundation and subgrade preparation shall be performed in accordance with the Geotechnical Report recommendations, approved manufacturer's instructions, Drawings, and Specifications. The lump sum price shall also include all labor, equipment, materials, testing, and other work required by the Drawings and Specifications that is not specifically identified as a separate pay item.

Bid Item F4 - Pilaster (at Ornamental Fence):
The unit price bid for this item shall include full compensation for furnishing all labor, materials, tools, equipment, and incidentals; and for performing all work involved in constructing cast-in-place concrete pilasters, including excavation, soil preparation, subgrade preparation and compaction, concrete footing/foundation, reinforcement, forming, concrete placement, concrete additives, finishing, curing, sealers, embedded items, sleeves, anchor bolts, fence attachment hardware, inserts, connections required for adjacent fencing, backfill, cleanup, and all appurtenant work necessary to provide complete pilaster installations at the locations indicated on the Drawings, as specified in the Specifications and Plans. The bid price shall also include all labor, equipment, materials, and other work required by the Drawings and Specifications that is not specifically identified as a separate pay item.

G – ELECTRICAL POWER, LIGHTING, EV

Bid Item G1 - Electrical service 400A, 120/208V, 3phase, 4 wire w/transformer pad:
The lump sum price bid for this item shall include full compensation for furnishing all labor, materials, tools, equipment, permits, fees, and incidentals; and for performing all work involved in providing a 400-ampere, 120/208-volt, 3-phase, 4-wire electrical service to the park, including coordination with the serving utility, service equipment, transformer, transformer pad, concrete, reinforcement, grounding and bonding, conduits, conductors, pull boxes, disconnects, connections, excavation, trenching, bedding, backfill, compaction, testing, inspection, surface restoration, and all appurtenant work necessary to provide a complete and operational electrical service, as shown on the Drawings and specified in the Specifications and Plans.

Bid Item G2 - Service to Building:
The lump sum price bid for this item shall include full compensation for furnishing all labor, materials, tools,

equipment, and incidentals; and for performing all work involved in providing electrical service to the restroom building, including coordination with the serving utility, excavation, trenching, shoring as required, subgrade preparation, conduit, conductors, pull boxes, service equipment, disconnects, transformers as required, grounding and bonding, connections to the restroom building electrical system, testing, backfill, compaction, surface restoration, and all appurtenant work necessary to provide complete and operational electrical service to the restroom building at the locations shown on the Drawings, as specified in the Specifications and Plans.

Bid Item G3 - Service to Amphitheater:
The lump sum price bid for this item shall include full compensation for furnishing all labor, materials, tools, equipment, permits, fees, and incidentals; and for performing all work involved in providing electrical service to the amphitheater, including coordination with the serving utility, service equipment, transformers as required, transformer pad, concrete, reinforcement, grounding and bonding, conduits, conductors, pull boxes, disconnects, connections to the amphitheater electrical system, excavation, trenching, bedding, backfill, compaction, testing, inspection, surface restoration, and all appurtenant work necessary to provide a complete and operational electrical service to the amphitheater, as shown on the Drawings and specified in the Specifications and Plans.

Bid Item G4 - Service to Gardens:
The lump sum price bid for this item shall include full compensation for furnishing all labor, materials, tools, equipment, permits, fees, and incidentals; and for performing all work involved in providing electrical service to the gardens, including coordination with the serving utility, service equipment, transformers as required, transformer pad, concrete, reinforcement, grounding and bonding, conduits, conductors, pull boxes, disconnects, connections to the garden electrical system, excavation, trenching, bedding, backfill, compaction, testing, inspection, surface restoration, and all appurtenant work necessary to provide a complete and operational electrical service to the garden, as shown on the Drawings and specified in the Specifications and Plans.

Bid Item G5 - Parking Lot Lighting:
The unit price bid for this item shall include full compensation for furnishing all labor, materials, tools, equipment, and incidentals; and for performing all work involved in furnishing and installing parking lot lighting, including light pole, luminaire, foundation, concrete, reinforcement, anchor bolts, conduits, conductors, pull boxes, junction boxes, disconnects, grounding and bonding, controls, photocells, excavation, trenching, bedding, backfill, compaction, testing, adjustment, and all appurtenant work necessary to provide a complete and operational parking lot lighting fixture at the locations shown on the Drawings, as specified in the Specifications and Plans.

Bid Item G6 - Pathway lighting:
The unit price bid for this item shall include full compensation for furnishing all labor, materials, tools, equipment, and incidentals; and for performing all work involved in furnishing and installing pathway lighting, including light pole, luminaire, foundation, concrete, reinforcement, anchor bolts, conduits, conductors, pull boxes, junction boxes, disconnects, grounding and bonding, controls, photocells, excavation, trenching, bedding, backfill, compaction, testing, adjustment, and all appurtenant work necessary to provide a complete and operational parking lot lighting fixture at the locations shown on the Drawings, as specified in the Specifications and Plans.

Bid Item G7 - EV Charging stations:
The unit price bid for this item shall include full compensation for furnishing all labor, materials, tools, equipment, permits, fees, and incidentals; and for performing all work involved in furnishing and installing electric vehicle charging stations, including EV charging equipment, mounting hardware, equipment pads, bollards or protective barriers where shown, electrical conduits, conductors, disconnects, circuit breakers, grounding and bonding, communication wiring as required, excavation, trenching, bedding, backfill, compaction, testing, commissioning, labeling, and all appurtenant work necessary to provide complete and operational electric vehicle charging stations at the locations shown on the Drawings, as specified in the Specifications and Plans.

Bid Item G8 - EV infrastructure for future:
The lump sum bid for this item shall include full compensation for furnishing all labor, materials, tools, equipment, and incidentals, and for performing all work necessary to provide electric vehicle (EV) charging infrastructure for future use at the parking lot in accordance with applicable CALGreen requirements, including excavation and trenching, subgrade preparation, installation of underground electrical conduit, pull boxes, junction boxes, sweeps, fittings, warning tape, electrical service and panel provisions, circuit pathways, stub-outs, conductors where indicated, concrete encasement where required, restoration of pavement and other surfaces, identification and labeling of EV charging spaces and electrical infrastructure, and all connections and appurtenant work necessary to provide a complete and functional EV charging infrastructure system at the locations shown on the Drawings and as specified in the Plans and Specifications. EV charging stations, chargers, and associated charging equipment are not included unless specifically indicated on the Drawings.

H – PLANTING

Bid Item H1 - Soil Preparation including amendments:
The square foot price bid for this item shall include full compensation for furnishing all labor, materials, tools, equipment, and incidentals; and for performing all work involved in soil preparation and amendment, including soil testing, furnishing and incorporating fertilizers, compost, organic matter, gypsum, soil conditioners, and other amendments as recommended by the soil laboratory and specified in the Contract Documents, as well as tilling, cultivation, blending, moisture conditioning, fine grading, and all appurtenant work necessary to prepare planting areas in the locations indicated on the Drawings, as specified in the Specifications and Plans.

Bid Item H2 - Sod Turf Lawn:
The square foot price bid for this item shall include full compensation for furnishing all labor, materials, tools, equipment, and incidentals; and for performing all work involved in furnishing and installing sod turf, including final soil preparation, fine grading, furnishing and installing sod, rolling, watering, establishment, and all appurtenant work necessary to provide a complete and healthy turf installation in the locations indicated on the Drawings, as specified in the Specifications and Plans.

Bid Item H3 - Hydroseed Meadow Mix:
The square foot price bid for this item shall include full compensation for furnishing all labor, materials, tools, equipment, and incidentals; and for performing all work involved in furnishing and applying hydroseed meadow mix, including seed, fiber mulch, tackifier, fertilizer where specified, mixing, application, watering, erosion control measures associated with the hydroseed application, establishment, and all appurtenant work necessary to provide a complete and healthy vegetative cover in the locations indicated on the Drawings, as specified in the Specifications and Plans.

Bid Item H4 - Trees - 15 Gal from SacTree:
The unit price bid for this item shall include full compensation for furnishing all labor, materials, tools, equipment, and incidentals; and for performing all work involved in furnishing and installing 15-gallon trees, including procurement, delivery, excavation, planting, backfill, staking, guying, tree ties, watering, mulch, pruning, cleanup, establishment, and all appurtenant work necessary to provide complete and healthy tree installations at the locations indicated on the Drawings, as specified in the Specifications and Plans. The bid price shall also include all labor, equipment, materials, and other work required by the Drawings and Specifications that is not specifically identified as a separate pay item.

Bid Item H5 - Specimen Trees - 48" Box:
The unit price bid for this item shall include full compensation for furnishing all labor, materials, tools, equipment, and incidentals; and for performing all work involved in furnishing and installing 48-inch box specimen trees, including procurement, delivery, unloading, handling, excavation, planting, backfill, watering basin, staking, guying, tree ties, temporary bracing, crane services, watering, mulch, pruning, cleanup,

establishment, and all appurtenant work necessary to provide complete and healthy tree installations at the locations indicated on the Drawings, as specified in the Specifications and Plans. The bid price shall also include all labor, equipment, materials, and other work required by the Drawings and Specifications that is not specifically identified as a separate pay item.

Bid Item H6 - Root barriers:
The unit price bid for this item shall include full compensation for furnishing all labor, materials, tools, equipment, and incidentals; and for performing all work involved in furnishing and installing root barriers, including procurement, delivery, excavation, trenching, preparation of trench surfaces, furnishing and installation of root barrier panels, connectors, joints, backfill, compaction, cleanup, and all appurtenant work necessary to provide a complete root barrier installation at the locations indicated on the Drawings, as specified in the Specifications and Plans. The bid price shall also include all labor, equipment, materials, and other work required by the Drawings and Specifications that is not specifically identified as a separate pay item.

Bid Item H7 - Bark Mulch in Native Areas:
The square foot price bid for this item shall include full compensation for furnishing all labor, materials, tools, equipment, and incidentals; and for performing all work involved in furnishing and installing bark mulch in native planting areas, including procurement, delivery, placement, spreading, grading, and maintenance of mulch to the depth indicated on the Drawings, as specified in the Specifications and Plans. The bid price shall also include all labor, equipment, materials, and other work required by the Drawings and Specifications necessary to provide complete mulch installation in native areas.

Bid Item H8 - Bark Mulch in New Planting Areas:
The square foot price bid for this item shall include full compensation for furnishing all labor, materials, tools, equipment, and incidentals; and for performing all work involved in furnishing and installing bark mulch in new planting areas, including procurement, delivery, placement, spreading, grading, and maintenance of mulch to the depth indicated on the Drawings, as specified in the Specifications and Plans. The bid price shall also include all labor, equipment, materials, and other work required by the Drawings and Specifications necessary to provide complete mulch installation in new planting areas.

Bid Item H9 – Shrubs - 1 gal:
The unit price bid for this item shall include full compensation for furnishing all labor, materials, tools, equipment, and incidentals; and for performing all work involved in furnishing and installing 1-gallon shrubs, including procurement, delivery, handling, excavation, planting, backfill, pruning, watering, cleanup, establishment, and all appurtenant work necessary to provide complete and healthy shrub installations at the locations indicated on the Drawings, as specified in the Specifications and Plans. The bid price shall also include all labor, equipment, materials, and other work required by the Drawings and Specifications that is not specifically identified as a separate pay item.

Bid Item H10 – Shrubs - 5 gal:
The unit price bid for this item shall include full compensation for furnishing all labor, materials, tools, equipment, and incidentals; and for performing all work involved in furnishing and installing 5-gallon shrubs, including procurement, delivery, handling, excavation, planting, backfill, pruning, watering, cleanup, establishment, and all appurtenant work necessary to provide complete and healthy shrub installations at the locations indicated on the Drawings, as specified in the Specifications and Plans. The bid price shall also include all labor, equipment, materials, and other work required by the Drawings and Specifications that is not specifically identified as a separate pay item.

Bid Item H11 – Shrubs - 15 gal:
The unit price bid for this item shall include full compensation for furnishing all labor, materials, tools, equipment, and incidentals; and for performing all work involved in furnishing and installing 15-gallon shrubs,

including procurement, delivery, handling, excavation, planting, backfill, pruning, watering, cleanup, establishment, and all appurtenant work necessary to provide complete and healthy shrub installations at the locations indicated on the Drawings, as specified in the Specifications and Plans. The bid price shall also include all labor, equipment, materials, and other work required by the Drawings and Specifications that is not specifically identified as a separate pay item.

I – IRRIGATION

Bid Item I1 - Irrigation system:
The square foot price bid for this item shall include full compensation for furnishing all labor, materials, tools, equipment, and incidentals; and for performing all work involved in furnishing and installing a complete and fully functioning irrigation system, including procurement, delivery, installation in accordance with the manufacturer's recommendations, layout, trenching, excavation, backfill, compaction, irrigation mainlines, lateral lines, pipe sleeves, drip irrigation, dripline, irrigation heads, nozzles, root watering systems, control wires, remote control valve assemblies, irrigation controller assembly, flow sensors, fittings, valve boxes, testing, flushing, adjustment, programming, and all other miscellaneous irrigation components shown on the Drawings and required for a complete operating system. The bid price shall also include all labor, equipment, materials, and other work required by the Drawings and Specifications that is not specifically identified as a separate pay item.

Bid Item I2 - Connection to existing water meter:
The unit price bid for this item shall include full compensation for furnishing all labor, materials, tools, equipment, and incidentals; and for performing all work involved in connecting the new irrigation system to the existing water meter, including field verification of existing conditions, excavation, trenching, removal and disposal of existing materials as required, fittings, adapters, valves, piping, backflow prevention components where specified, connections, appurtenances, testing, flushing, disinfection where required, and restoration of disturbed areas. The bid price shall also include all labor, equipment, materials, and other work required by the Drawings and Specifications necessary to provide a complete and operational connection to the existing water meter.

Bid Item I3 - Revisions to Existing Irrigation System:
The allowance amount for this item shall include full compensation for furnishing all labor, materials, tools, equipment, and incidentals; and for performing all work involved in maintaining the existing irrigation system in operation during construction and modifying the existing irrigation system as required to accommodate the proposed improvements. Work includes, but is not limited to, locating, protecting, adjusting, relocating, removing, replacing, reconnecting, extending, and modifying irrigation mainlines, lateral lines, pipe sleeves, irrigation heads, nozzles, root watering systems, control wires, remote control valve assemblies, irrigation controller assemblies, flow sensors, fittings, valve boxes, testing, flushing, adjustment, programming, and all other miscellaneous irrigation components required to restore the existing irrigation system to a complete and fully operational condition. The allowance amount shall also include all labor, equipment, materials, and other work required by the Drawings and Specifications that is necessary to complete the revisions to the existing irrigation system and that is not specifically identified as a separate pay item.

J – MISCELLANEOUS

Bid Item J1 - Maintenance (90 Day):
The square foot price bid for this item shall include full compensation for furnishing all labor, materials, tools, equipment, and incidentals; and for performing all work required during the 90-day maintenance period, including maintenance of all installed landscape improvements, irrigation system operation and adjustment, watering, weed control, pruning, replacement of dead or unhealthy plant material, pest and disease control, fertilization where specified, mulch maintenance, cleanup, mowing and turf maintenance where applicable, monitoring and adjustment of irrigation components, and all other work necessary to maintain the landscape improvements in a healthy and acceptable condition until final acceptance by the District, as specified in the Specifications and Plans. The bid price shall also include all labor, equipment, materials, and other work required by the Drawings

and Specifications that is not specifically identified as a separate pay item.

Bid Item J2 - Mobilization/De-mobilization (NTE - 5%):
The lump sum price bid for this item shall include full compensation for furnishing all labor, materials, tools, equipment, and incidentals; and for performing all work involved in mobilization and de-mobilization, including preparation for beginning work, transportation of personnel, equipment, materials, and supplies to and from the project site, establishment of temporary facilities, field offices, storage areas, project signage, permits and coordination, bonds and insurance, pre-construction activities, startup operations, project closeout, removal of temporary facilities, cleanup, and all other work necessary to mobilize and demobilize for completion of the Work as specified in the Contract Documents.

Payment for this item shall not exceed five percent (5%) of the total contract bid amount unless otherwise approved by the District.

END OF SECTION

6.19 BID ITEM DESCRIPTIONS (OFF-SITE)

BID ITEM DESCRIPTIONS
The descriptions below are general descriptions and do not include estimated quantities. See plans and bid summary for estimated quantities. Estimated quantities are provided as a courtesy only. Actual numbers and quantities of symbols on plans prevail.

BID ITEM LIST – OFF-SITE WORK

A - SITE PREPARATION

Bid Item A1 – Mobilization:
The lump sum price bid for this item shall include full compensation for furnishing all labor, materials, tools, equipment, and incidentals; and for performing all work involved in mobilization and demobilization, including transportation of personnel, equipment, and materials to and from the project site, establishment and removal of temporary facilities, site setup, project signage, permits, bonds, insurance, and all other work necessary to mobilize for and demobilize from completion of the Work, as specified in the Specifications and Plans.

Bid Item A2 – Temporary Erosion Control / SWPPP Protection:
The acreage price bid for this item shall include full compensation for furnishing all labor, materials, tools, equipment, and incidentals; and for performing all work involved in providing, installing, maintaining, inspecting, repairing, replacing, and removing temporary erosion and sediment control measures required by the SWPPP and Contract Documents, including fiber rolls, inlet protection, sediment control measures, dust control, protection of stockpiles, and all appurtenant work necessary to protect the site and adjacent areas from erosion, sediment, and stormwater pollution throughout construction.

B – STREET WORK

Bid Item B1 – Sawcut Existing Pavement:
The linear foot price bid for this item shall include full compensation for furnishing all labor, materials, tools, equipment, and incidentals; and for performing all work involved in sawcutting existing pavement, including layout, sawcutting to the lines and depths indicated on the Drawings, removal of pavement as required for adjacent construction, protection of remaining pavement edges, cleanup, and all appurtenant work necessary to provide clean and straight pavement cuts in the locations indicated on the Drawings, as specified in the Specifications and Plans.

Bid Item B2 – Demo Existing Pavement / Median:
The square foot price bid for this item shall include full compensation for furnishing all labor, materials, tools, equipment, and incidentals; and for performing all work involved in demolition and removal of existing pavement and median improvements, including removal, loading, hauling, disposal, removal of associated curb and other appurtenant improvements as indicated on the Drawings, cleanup, and preparation of the area for new construction, as specified in the Specifications and Plans.

Bid Item B3 – Type 4 Median Curb:
The linear foot price bid for this item shall include full compensation for furnishing all labor, materials, tools, equipment, and incidentals; and for performing all work involved in furnishing and installing Type 4 median curb per County Standards, including excavation, subgrade preparation and compaction, aggregate base, forming, reinforcement, concrete placement, finishing, curing, joints, joint sealants, and all appurtenant work necessary to complete the installation in the locations indicated on the Drawings, as specified in the Specifications and Plans.

Bid Item B4 – AC/AB Pavement:
The square foot price bid for this item shall include full compensation for furnishing all labor, materials, tools, equipment, and incidentals; and for performing all work involved in furnishing and installing asphalt concrete (AC) pavement over aggregate base (AB), including subgrade preparation and compaction, aggregate base, asphalt concrete, tack coat, paving, compaction, finishing, and all appurtenant work necessary to complete the installation in the locations indicated on the Drawings, as specified in the Specifications and Plans.

Bid Item B5 – Sidewalk:
The square foot price bid for this item shall include full compensation for furnishing all labor, materials, tools, equipment, and incidentals; and for performing all work involved in furnishing and installing concrete sidewalk per County Standards, including excavation, subgrade preparation and compaction, aggregate base, forming, reinforcement, concrete placement, finishing, curing, joints, joint sealants, and all appurtenant work necessary to complete the installation in the locations indicated on the Drawings, as specified in the Specifications and Plans.

Bid Item B6 – Type 1A Curb:
The linear foot price bid for this item shall include full compensation for furnishing all labor, materials, tools, equipment, and incidentals; and for performing all work involved in furnishing and installing Type 1A curb in accordance with the County Standard Details, including excavation, subgrade preparation and compaction, aggregate base, forming, reinforcement, concrete placement, finishing, curing, joints, joint sealants, and all appurtenant work necessary to complete the installation in the locations indicated on the Drawings, as specified in the Specifications and Plans.

Bid Item B7 – 45' Driveway:
The lump sum price bid for this item shall include full compensation for furnishing all labor, materials, tools, equipment, and incidentals; and for performing all work involved in furnishing and installing a 45-foot-wide driveway approach, including curb ramps on both sides, detectable warning surfaces, excavation, subgrade preparation and compaction, aggregate base, concrete pavement, forming, reinforcement, concrete placement, finishing, curing, joints, joint sealants, grading, and all appurtenant work necessary to complete the driveway approach and associated accessible improvements in the locations indicated on the Drawings, as specified in the Specifications and Plans.

C – TRAFFIC SIGNAL

Bid Item C1 - Traffic Signal Modification:
The contract lump sum price paid for Traffic Signal Modification - Watt Ave/Navaho Dr shall include, but is not limited to, full compensation for furnishing all labor, material, tools, equipment, incidentals, and for doing all work involved in potholing, traffic control, demolition of existing for improvements as necessary, foundations, conduits, conductors, pull boxes, signal standards and posts, controller assembly, emergency vehicle detectors, pedestrian and vehicular signal heads, audible pedestrian signal heads with countdown modules, APS pedestrian push buttons, mast arm signs, excavation and backfill, restoring sidewalk, pavement and appurtenances damaged or destroyed during construction, salvaging existing materials as specified in these Specifications and Plans. The bid price shall also include all labor, equipment, materials, and other work required by the Drawings and Specifications that is not specifically identified as a separate pay item.

Bid Item C2 - Striping and Pavement Marking:
Striping, of the various types shown, shall be at the cost indicated in the bid items. The contract price paid per linear foot for Striping, of the various types shown in the bid schedule, shall include, but is not limited to, full compensation for furnishing all labor, material, tools, equipment, incidentals, and for doing all work involved in furnishing and placement of traffic lines and pavement markings, complete in place, and shall include establishing alignment and layout work as shown on the Contract Drawings, including as specified in the State Standard Specifications and Plans. The bid price shall also include all labor, equipment, materials, and other work required

by the Drawings and Specifications that is not specifically identified as a separate pay item.

Bid Item C3 - Type H Marker:
Type H Marker, shall be at the cost indicated in the bid items. The contract price paid per each Type H marker, shall include, but is not limited to, full compensation for furnishing all labor, material, tools, equipment, incidentals, and for doing all work involved in furnishing and placement of Type H marker, complete in place, and shall include establishing alignment and layout work as shown on the Contract Drawings, including as specified in the County Standard Drawing 4-77. The bid price shall also include all labor, equipment, materials, and other work required by the Drawings and Specifications that is not specifically identified as a separate pay item.

D – PLANTING

Bid Item D1 - Soil Preparation including amendments:
The square foot price bid for this item shall include full compensation for furnishing all labor, materials, tools, equipment, and incidentals; and for performing all work involved in soil preparation and amendment, including soil testing, furnishing and incorporating fertilizers, compost, organic matter, gypsum, soil conditioners, and other amendments as recommended by the soil laboratory and specified in the Contract Documents, as well as tilling, cultivation, blending, moisture conditioning, fine grading, and all appurtenant work necessary to prepare planting areas in the locations indicated on the Drawings, as specified in the Specifications and Plans.

Bid Item D2 - Trees - 15 Gal from SacTree:
The unit price bid for this item shall include full compensation for furnishing all labor, materials, tools, equipment, and incidentals; and for performing all work involved in furnishing and installing 15-gallon trees, including procurement, delivery, excavation, planting, backfill, staking, guying, tree ties, watering, mulch, pruning, cleanup, establishment, and all appurtenant work necessary to provide complete and healthy tree installations at the locations indicated on the Drawings, as specified in the Specifications and Plans. The bid price shall also include all labor, equipment, materials, and other work required by the Drawings and Specifications that is not specifically identified as a separate pay item.

Bid Item D3 - Root barriers:
The unit price bid for this item shall include full compensation for furnishing all labor, materials, tools, equipment, and incidentals; and for performing all work involved in furnishing and installing root barriers, including procurement, delivery, excavation, trenching, preparation of trench surfaces, furnishing and installation of root barrier panels, connectors, joints, backfill, compaction, cleanup, and all appurtenant work necessary to provide a complete root barrier installation at the locations indicated on the Drawings, as specified in the Specifications and Plans. The bid price shall also include all labor, equipment, materials, and other work required by the Drawings and Specifications that is not specifically identified as a separate pay item.

Bid Item D4 - Bark Mulch in New Median:
The square foot price bid for this item shall include full compensation for furnishing all labor, materials, tools, equipment, and incidentals; and for performing all work involved in furnishing and installing bark mulch in new planting areas, including procurement, delivery, placement, spreading, grading, and maintenance of mulch to the depth indicated on the Drawings, as specified in the Specifications and Plans. The bid price shall also include all labor, equipment, materials, and other work required by the Drawings and Specifications necessary to provide complete mulch installation in new planting areas.

Bid Item D5 – Shrubs - 1 gal:
The unit price bid for this item shall include full compensation for furnishing all labor, materials, tools, equipment, and incidentals; and for performing all work involved in furnishing and installing 1-gallon shrubs, including procurement, delivery, handling, excavation, planting, backfill, pruning, watering, cleanup,

establishment, and all appurtenant work necessary to provide complete and healthy shrub installations at the locations indicated on the Drawings, as specified in the Specifications and Plans. The bid price shall also include all labor, equipment, materials, and other work required by the Drawings and Specifications that is not specifically identified as a separate pay item.

E – IRRIGATION

Bid Item E1 - Irrigation system:
The square foot price bid for this item shall include full compensation for furnishing all labor, materials, tools, equipment, and incidentals; and for performing all work involved in modifying and extending the existing irrigation system to serve the new median landscape improvements, including layout, trenching, excavation, backfill, compaction, irrigation piping, pipe sleeves, rotary spray heads, nozzles, remote control valve assemblies, control wires, fittings, valve boxes, connections to the existing irrigation system, testing, flushing, adjustment, programming, and all other miscellaneous irrigation components shown on the Drawings and required for a complete and fully functioning system. The bid price shall also include all labor, equipment, materials, and other work required by the Drawings and Specifications that is not specifically identified as a separate pay item.

F - MISCELLANEOUS

Bid Item F1 - Maintenance (90 Day):
The square foot price bid for this item shall include full compensation for furnishing all labor, materials, tools, equipment, and incidentals; and for performing all work required during the 90-day maintenance period, including maintenance of all installed landscape improvements, irrigation system operation and adjustment, watering, weed control, pruning, replacement of dead or unhealthy plant material, pest and disease control, fertilization where specified, mulch maintenance, cleanup, mowing and turf maintenance where applicable, monitoring and adjustment of irrigation components, and all other work necessary to maintain the landscape improvements in a healthy and acceptable condition until final acceptance by the District, as specified in the Specifications and Plans. The bid price shall also include all labor, equipment, materials, and other work required by the Drawings and Specifications that is not specifically identified as a separate pay item.

Bid Item F2 - Mobilization/De-mobilization (NTE - 5%):
The lump sum price bid for this item shall include full compensation for furnishing all labor, materials, tools, equipment, and incidentals; and for performing all work involved in mobilization and de-mobilization, including preparation for beginning work, transportation of personnel, equipment, materials, and supplies to and from the project site, establishment of temporary facilities, field offices, storage areas, project signage, permits and coordination, bonds and insurance, pre-construction activities, startup operations, project closeout, removal of temporary facilities, cleanup, and all other work necessary to mobilize and demobilize for completion of the Work as specified in the Contract Documents.

Payment for this item shall not exceed five percent (5%) of the total contract bid amount unless otherwise approved by the District.

END OF SECTION

TECHNICAL SPECIFICATIONS FOR:

Sierra Creek Community Park North Highlands Recreation and Park District

August, 2026

BID SET

Prepared by:

Westwood

1165 Scenic Drive, Suite A
Modesto, CA 95350
Phone: (209) 571-1765
Fax: (209) 571-2466

westwoodps.com

TABLE OF CONTENTS

SECTIONS **PAGES**

DIVISION 00 – PROCUREMENT AND CONTRACTING REQUIREMENTS

BY OTHERS

DIVISION 01 – GENERAL REQUIREMENTS

SECTION 011100 – SUMMARY ..... 1 - 4

SECTION 012500 – SUBSTITUTION PROCEDURES ..... 1 - 3

SECTION 013100 – PROJECT MANAGEMENT AND COORDINATION ..... 1 – 10

SECTION 013300 – SUBMITTAL PROCEDURES ..... 1 - 9

SECTION 014000 – QUALITY REQUIREMENTS ..... 1 - 11

SECTION 015000 – TEMPORARY FACILITIES AND CONTROLS ..... 1 - 9

SECTION 015639 – TEMPORARY TREE AND PLANT PROTECTION ..... 1 - 8

SECTION 016000 – PRODUCT REQUIREMENTS ..... 1 - 7

SECTION 017419 – CONSTRUCTION WASTE MANAGEMENT ..... 1 - 7

SECTION 017700 – CLOSEOUT PROCEDURES ..... 1 – 6

SECTION 017823 – OPERATION AND MAINTENANCE DATA ..... 1 - 8

SECTION 017839 – PROJECT RECORD DOCUMENTS ..... 1 - 5

DIVISION 02 – EXISTING CONDITIONS

SECTION 024119 – SELECTIVE DEMOLITION ..... 1 - 7

DIVISION 03 – CONCRETE

SECTION 033000 – CAST-IN-PLACE CONCRETE ..... 1 – 18

SECTION 032000 – CONCRETE REINFORCING ..... 1 - 5

DIVISION 04 – 10

NOT USED

DIVISION 11 – EQUIPMENT

SECTION 116800 – PLAY EQUIPMENT AND STRUCTTURES 1- 5

DIVISION 12 - 30

NOT USED

DIVISION 31 – EARTHWORK

SECTION 311000 – SITE CLEARING 1- 7

DIVISION 32 – EXTERIOR IMPROVEMENTS

SECTION 321313 – CONCRETE PAVING ..... 1 – 13

SECTION 321373 – CONCRETE PAVING JOINT SEALANTS ..... 1 - 5

SECTION 321816.13 – PLAYGROUND PROTECTIVE SURFACING ..... 1 – 6

SECTION 323119 – DECORATIVE METAL FENCES AND GATES ..... 1 - 8

SECTION 323300- SITE FURNISHINGS ..... 1 - 9

SECTION 328400 – PLANTING IRRIGATION ..... 1 – 14

SECTION 329113 – SOIL PREPARATION ..... 1 - 12

SECTION 329200 – TURF AND GRASSES .....1 - 9

SECTION 329300 – PLANTS .....1 - 14

DIVISION 33 – 48

NOT USED

END OF TECHNICAL SPECIFICATIONS

END OF TABLE OF CONTENTS

SECTION 011000 - SUMMARY

PART 1 - GENERAL

1.1 RELATED DOCUMENTS

A. Drawings and general provisions of the Contract, including General and Supplementary Conditions and other Division 01 Specification Sections, apply to this Section.

1.2 SUMMARY

A. Section Includes:

1. Project information.
2. Work covered by Contract Documents.
3. Multiple Work Packages.
4. Contractor's use of site and premises.
5. Coordination with occupants.
6. Work restrictions.
7. Specification and Drawing conventions.
8. Miscellaneous provisions.

1.3 DEFINITIONS

A. Work Package: A group of specifications, drawings, and schedules prepared by the design team to describe a portion of the Project Work for pricing, permitting, and construction.

1.4 PROJECT INFORMATION

A. Project Identification: Sierra Creek Park.

1. Project Location: Antelope, California

B. Landscape Architect's Consultants: Landscape Architect has retained the following design professionals, who have prepared designated portions of the Contract Documents:

C. Other District Consultants: District has retained the following design professionals who have prepared designated portions of the Contract Documents:

D. Contractor: has been engaged as Contractor for this Project.

E. Construction Manager: .

1. Construction Manager has been engaged for this Project to serve as an advisor to District and to provide assistance in administering the Contract for construction between District

Copyright © 2022 by the American Institute of Architects. Warning: This AIA MasterSpec based document is protected by U.S. Copyright Law and International Treaties. A valid, current MasterSpec license is required for editing or use of this document.

and each Contractor, according to a separate contract between District and Construction Manager.

2. Construction Manager for this Project is Project's constructor. The terms "Construction Manager" and "Contractor" are synonymous.

F. Project Coordinator for Multiple Contracts: District shall serve as Project coordinator.

1.5 WORK COVERED BY CONTRACT DOCUMENTS

A. The Work of Project is defined by the Contract Documents and includes, but is not limited to, the following:

1. Construction of the a community park.

B. Type of Contract:

1. Project will be constructed under coordinated, concurrent multiple contracts.

1.6 MULTIPLE WORK PACKAGES

A. Construction Documents for this Project will be issued in a series of Work Packages, each defining the Work under individual Contracts. Coordinate the Work under this Contract with separate contracts defined by other work packages.

1.7 CONTRACTOR'S USE OF SITE AND PREMISES

A. Unrestricted Use of Site: Contractor shall have full use of Project site for construction operations during construction period. Contractor's use of Project site is limited only by District's right to perform work or to retain other contractors on portions of Project.

B. Restricted Use of Site: Contractor shall have limited use of Project site for construction operations as indicated on Drawings by the Contract limits and as indicated by requirements of this Section.

C. Limits on Use of Site: Limit use of Project site to Work in areas and areas within the Contract limits indicated. Do not disturb portions of Project site beyond areas in which the Work is indicated.

D. Condition of Existing Building: Maintain portions of existing building affected by construction operations in a weathertight condition throughout construction period. Repair damage caused by construction operations.

E. Condition of Existing Grounds: Maintain portions of existing grounds, landscaping, and hardscaping affected by construction operations throughout construction period. Repair damage caused by construction operations.

Copyright © 2022 by the American Institute of Architects. Warning: This AIA MasterSpec based document is protected by U.S. Copyright Law and International Treaties. A valid, current MasterSpec license is required for editing or use of this document.

1.8 COORDINATION WITH OCCUPANTS

A. Full District Occupancy: District will occupy Project site and adjacent building(s) during entire construction period. Cooperate with District during construction operations to minimize conflicts and facilitate District usage. Perform the Work so as not to interfere with District's day-to-day operations. Maintain existing exits unless otherwise indicated.

1. Maintain access to existing walkways, corridors, and other adjacent occupied or used facilities. Do not close or obstruct walkways, corridors, or other occupied or used facilities without written permission from District and approval of authorities having jurisdiction.
2. Notify District not less than 72 hours in advance of activities that will affect District's operations.

1.9 WORK RESTRICTIONS

A. Comply with restrictions on construction operations.

1. Comply with limitations on use of public streets, work on public streets, rights of way, and other requirements of authorities having jurisdiction.

B. Existing Utility Interruptions: Do not interrupt utilities serving facilities occupied by District or others unless permitted under the following conditions and then only after arranging for temporary utility services according to requirements indicated:

1. Obtain District's written permission before proceeding with utility interruptions.

C. Noise, Vibration, Dust, and Odors: Coordinate operations that may result in high levels of noise and vibration, dust, odors, or other disruption to District occupancy with District.

D. Smoking and Controlled Substance Restrictions: Use of tobacco products, alcoholic beverages, and other controlled substances on Project site on District's property is not permitted.

E. Employee Identification: Provide identification tags for Contractor personnel working on Project site. Require personnel to use identification tags at all times.

F. Employee Screening: Comply with District's requirements for drug and background screening of Contractor personnel working on Project site.

1. Maintain list of approved screened personnel with District's representative.

1.10 SPECIFICATION AND DRAWING CONVENTIONS

A. Specification Content: The Specifications use certain conventions for the style of language and the intended meaning of certain terms, words, and phrases when used in particular situations. These conventions are as follows:

1. Imperative mood and streamlined language are generally used in the Specifications. The words "shall," "shall be," or "shall comply with," depending on the context, are implied where a colon (:) is used within a sentence or phrase.

Copyright © 2022 by the American Institute of Architects. Warning: This AIA MasterSpec based document is protected by U.S. Copyright Law and International Treaties. A valid, current MasterSpec license is required for editing or use of this document.

2. Text Color: Text used in the Specifications, including units of measure, manufacturer and product names, and other text may appear in multiple colors or underlined as part of a hyperlink; no emphasis is implied by text with these characteristics.
3. Hypertext: Text used in the Specifications may contain hyperlinks. Hyperlinks may allow for access to linked information that is not residing in the Specifications. Unless otherwise indicated, linked information is not part of the Contract Documents.
4. Specification requirements are to be performed by Contractor unless specifically stated otherwise.

B. Division 00 Contracting Requirements: General provisions of the Contract, including General and Supplementary Conditions, apply to all Sections of the Specifications.

C. Division 01 General Requirements: Requirements of Sections in Division 01 apply to the Work of all Sections in the Specifications.

D. Drawing Coordination: Requirements for materials and products identified on Drawings are described in detail in the Specifications. One or more of the following are used on Drawings to identify materials and products:

1. Terminology: Materials and products are identified by the typical generic terms used in the individual Specifications Sections.
2. Abbreviations: Materials and products are identified by abbreviations scheduled on Drawings and published as part of the U.S. National CAD Standard.
3. Keynoting: Materials and products are identified by reference keynotes referencing Specification Section numbers found in this Project Manual.

PART 2 - PRODUCTS (Not Used)

PART 3 - EXECUTION (Not Used)

END OF SECTION 011000

Copyright © 2022 by the American Institute of Architects. Warning: This AIA MasterSpec based document is protected by U.S. Copyright Law and International Treaties. A valid, current MasterSpec license is required for editing or use of this document.

SECTION 012500 - SUBSTITUTION PROCEDURES

PART 1 - GENERAL

1.1 RELATED DOCUMENTS

A. Drawings and general provisions of the Contract, including General and Supplementary Conditions and other Division 01 Specification Sections, apply to this Section.

1.2 SUMMARY

A. Section includes administrative and procedural requirements for substitutions.

B. Related Requirements:

1. Document 002600 "Procurement Substitution Procedures" for requirements for substitution requests prior to award of Contract.

1.3 DEFINITIONS

A. Substitutions: Changes in products, materials, equipment, and methods of construction from those required by the Contract Documents.

1. Substitutions for Cause: Changes proposed by Contractor that are required due to changed Project conditions, such as unavailability of product, regulatory changes, or unavailability of required warranty terms.
2. Substitutions for Convenience: Changes proposed by Contractor or District that are not required to meet other Project requirements but may offer advantage to Contractor or District.

1.4 ACTION SUBMITTALS

A. Substitution Requests: Submit documentation identifying product or fabrication or installation method to be replaced. Include Specification Section number and title and Drawing numbers and titles.

1. Substitution Request Form: Use form provided in Project Manual acceptable to Landscape Architect.
2. Documentation: Show compliance with requirements for substitutions and the following, as applicable:

a. Statement indicating why specified product or fabrication or installation method cannot be provided, if applicable.
b. Coordination of information, including a list of changes or revisions needed to other parts of the Work and to construction performed by District and separate contractors that will be necessary to accommodate proposed substitution.

Copyright © 2022 by the American Institute Architects. Warning: This AIA MasterSpec based document is protected by U.S. Copyright Law and International Treaties. A valid, current MasterSpec license is required for editing or use of this document.

c. Detailed comparison of significant qualities of proposed substitutions with those of the Work specified. Include annotated copy of applicable Specification Section. Significant qualities may include attributes, such as performance, weight, size, durability, visual effect, sustainable design characteristics, warranties, and specific features and requirements indicated. Indicate deviations, if any, from the Work specified.
d. Product Data, including drawings and descriptions of products and fabrication and installation procedures.
e. Samples, where applicable or requested.
f. Certificates and qualification data, where applicable or requested.
g. List of similar installations for completed projects, with project names and addresses as well as names and addresses of Landscape Architects and District.
h. Material test reports from a qualified testing agency, indicating and interpreting test results for compliance with requirements indicated.
i. Research reports evidencing compliance with building code in effect for Project, from.
j. Detailed comparison of Contractor's construction schedule using proposed substitutions with products specified for the Work, including effect on the overall Contract Time. If specified product or method of construction cannot be provided within the Contract Time, include letter from manufacturer, on manufacturer's letterhead, stating date of receipt of purchase order, lack of availability, or delays in delivery.
k. Cost information, including a proposal of change, if any, in the Contract Sum.
l. Contractor's certification that proposed substitution complies with requirements in the Contract Documents, except as indicated in substitution request, is compatible with related materials and is appropriate for applications indicated.
m. Contractor's waiver of rights to additional payment or time that may subsequently become necessary because of failure of proposed substitution to produce indicated results.

3. Landscape Architect's Action: If necessary, Landscape Architect will request additional information or documentation for evaluation within seven days of receipt of a request for substitution. Landscape Architect will notify Contractor through Construction Manager of acceptance or rejection of proposed substitution within 15 days of receipt of request, or seven days of receipt of additional information or documentation, whichever is later.

a. Forms of Acceptance: Change Order, Construction Change Directive, or Landscape Architect's Supplemental Instructions for minor changes in the Work.
b. Use product specified if Landscape Architect does not issue a decision on use of a proposed substitution within time allocated.

1.5 QUALITY ASSURANCE

A. Compatibility of Substitutions: Investigate and document compatibility of proposed substitution with related products and materials. Engage a qualified testing agency to perform compatibility tests recommended by manufacturers.

Copyright © 2022 by the American Institute Architects. Warning: This AIA MasterSpec based document is protected by U.S. Copyright Law and International Treaties. A valid, current MasterSpec license is required for editing or use of this document.

1.6 PROCEDURES

A. Coordination: Revise or adjust affected work as necessary to integrate work of the approved substitutions.

1.7 SUBSTITUTIONS

A. Substitutions for Cause: Submit requests for substitution immediately on discovery of need for change, but not later than 15 days prior to time required for preparation and review of related submittals.

1. Conditions: Landscape Architect will consider Contractor's request for substitution when the following conditions are satisfied. If the following conditions are not satisfied, Landscape Architect will return requests without action, except to record noncompliance with these requirements:

a. Requested substitution is consistent with the Contract Documents and will produce indicated results.
b. Substitution request is fully documented and properly submitted.
c. Requested substitution will not adversely affect Contractor's construction schedule.
d. Requested substitution has received necessary approvals of authorities having jurisdiction.
e. Requested substitution is compatible with other portions of the Work.
f. Requested substitution has been coordinated with other portions of the Work.
g. Requested substitution provides specified warranty.
h. If requested substitution involves more than one contractor, requested substitution has been coordinated with other portions of the Work, is uniform and consistent, is compatible with other products, and is acceptable to all contractors involved.

B. Substitutions for Convenience: Not allowed.

PART 2 - PRODUCTS (Not Used)

PART 3 - EXECUTION (Not Used)

END OF SECTION 012500

Copyright © 2022 by the American Institute Architects. Warning: This AIA MasterSpec based document is protected by U.S. Copyright Law and International Treaties. A valid, current MasterSpec license is required for editing or use of this document.

SECTION 013100 - PROJECT MANAGEMENT AND COORDINATION

PART 1 - GENERAL

1.1 RELATED DOCUMENTS

A. Drawings and general provisions of the Contract, including General and Supplementary Conditions and other Division 01 Specification Sections, apply to this Section.

1.2 SUMMARY

A. Section includes administrative provisions for coordinating construction operations on Project, including, but not limited to, the following:

1. General coordination procedures.
2. Coordination drawings.
3. RFIs.
4. Digital project management procedures.
5. Web-based Project management software package.
6. Project meetings.

B. Each contractor shall participate in coordination requirements. Certain areas of responsibility are assigned to a specific contractor.

C. Related Requirements:

1. Section 017700 "Closeout Procedures" for coordinating closeout of the Contract.

1.3 DEFINITIONS

A. RFI: Request for Information. Request from District, Construction Manager, Landscape Architect, or Contractor seeking information required by or clarifications of the Contract Documents.

1.4 INFORMATIONAL SUBMITTALS

A. Subcontract List: Prepare a written summary identifying individuals or firms proposed for each portion of the Work, including those who are to furnish products or equipment fabricated to a special design. Include the following information in tabular form:

1. Name, address, telephone number, and email address of entity performing subcontract or supplying products.
2. Number and title of related Specification Section(s) covered by subcontract.
3. Drawing number and detail references, as appropriate, covered by subcontract.

Copyright © 2022 by the American Institute of Architects. Warning: This AIA MasterSpec based document is protected by U.S. Copyright Law and International Treaties. A valid, current MasterSpec license is required for editing or use of this document.

B. Key Personnel Names: Within 15 days of starting construction operations, submit a list of key personnel assignments, including superintendent and other personnel in attendance at Project site. Identify individuals and their duties and responsibilities; list addresses, cellular telephone numbers, and e-mail addresses. Provide names, addresses, and telephone numbers of individuals assigned as alternates in the absence of individuals assigned to Project.

1. Post copies of list in Project meeting room, in temporary field office, and in prominent location built facility. Keep list current at all times.

1.5 GENERAL COORDINATION PROCEDURES

A. Coordination: Coordinate construction operations included in different Sections of the Specifications to ensure efficient and orderly installation of each part of the Work. Coordinate construction operations included in different Sections that depend on each other for proper installation, connection, and operation.

1. Schedule construction operations in sequence required to obtain the best results, where installation of one part of the Work depends on installation of other components, before or after its own installation.
2. Coordinate installation of different components to ensure maximum performance and accessibility for required maintenance, service, and repair.
3. Make adequate provisions to accommodate items scheduled for later installation.

B. Coordination of Multiple Contracts: Each contractor shall cooperate with Project coordinator, who shall coordinate its construction operations with those of other contractors and entities to ensure efficient and orderly installation of each part of the Work. Each contractor shall coordinate its own operations with operations included in different Sections that depend on each other for proper installation, connection, and operation.

1. Schedule construction operations in sequence required to obtain the best results, where installation of one part of the Work depends on installation of other components, before or after its own installation.
2. Coordinate installation of different components with other contractors to ensure maximum performance and accessibility for required maintenance, service, and repair.
3. Make adequate provisions to accommodate items scheduled for later installation.

C. Prepare memoranda for distribution to each party involved, outlining special procedures required for coordination. Include such items as required notices, reports, and list of attendees at meetings.

1. Prepare similar memoranda for District and separate contractors if coordination of their Work is required.

D. Administrative Procedures: Coordinate scheduling and timing of required administrative procedures with other construction activities and scheduled activities of other contractors and direction of Project coordinator to avoid conflicts and to ensure orderly progress of the Work. Such administrative activities include, but are not limited to, the following:

1. Preparation of Contractor's construction schedule.
2. Preparation of the schedule of values.

Copyright © 2022 by the American Institute of Architects. Warning: This AIA MasterSpec based document is protected by U.S. Copyright Law and International Treaties. A valid, current MasterSpec license is required for editing or use of this document.

3. Installation and removal of temporary facilities and controls.
4. Delivery and processing of submittals.
5. Progress meetings.
6. Preinstallation conferences.
7. Project closeout activities.
8. Startup and adjustment of systems.

1.6 COORDINATION DRAWINGS

A. Coordination Drawings, General: Prepare coordination drawings according to requirements in individual Sections, and additionally where installation is not completely indicated on Shop Drawings, where limited space availability necessitates coordination, or if coordination is required to facilitate integration of products and materials fabricated or installed by more than one entity.

1. Content: Project-specific information, drawn accurately to a scale large enough to indicate and resolve conflicts. Do not base coordination drawings on standard printed data. Include the following information, as applicable:

a. Use applicable Drawings as a basis for preparation of coordination drawings. Prepare sections, elevations, and details as needed to describe relationship of various systems and components.
b. Coordinate the addition of trade-specific information to coordination drawings by multiple contractors in a sequence that best provides for coordination of the information and resolution of conflicts between installed components before submitting for review.
c. Indicate functional and spatial relationships of components of Landscape Architectural, structural, civil, mechanical, and electrical systems.
d. Indicate space requirements for routine maintenance and for anticipated replacement of components during the life of the installation.
e. Show location and size of access doors required for access to concealed dampers, valves, and other controls.
f. Indicate required installation sequences.
g. Indicate dimensions shown on Drawings. Specifically note dimensions that appear to be in conflict with submitted equipment and minimum clearance requirements. Provide alternative sketches to Landscape Architect indicating proposed resolution of such conflicts. Minor dimension changes and difficult installations will not be considered changes to the Contract.

B. Coordination Drawing Organization: Organize coordination drawings as follows:

1. Structural Penetrations: Indicate penetrations and openings required for all disciplines.
2. Slab Edge and Embedded Items: Indicate slab edge locations and sizes and locations of embedded items for metal fabrications, sleeves, anchor bolts, bearing plates, angles, door floor closers, curbs and housekeeping pads, and similar items.
3. Electrical Work: Show the following:

a. Runs of vertical and horizontal conduit 1-1/4 inches in diameter and larger.
b. Light fixture, exit light, emergency battery pack, smoke detector, and other fire-alarm locations.

Copyright © 2022 by the American Institute of Architects. Warning: This AIA MasterSpec based document is protected by U.S. Copyright Law and International Treaties. A valid, current MasterSpec license is required for editing or use of this document.

c. Panel board, switchboard, switchgear, transformer, busway, generator, and motor-control center locations.
d. Location of pull boxes and junction boxes, dimensioned from column center lines.

4. Review: Landscape Architect will review coordination drawings to confirm that, in general, the Work is being coordinated, but not for the details of the coordination, which are Contractor's responsibility. If Landscape Architect determines that coordination drawings are not being prepared in sufficient scope or detail, or are otherwise deficient, Landscape Architect will so inform Contractor, who shall make suitable modifications and resubmit.
5. Coordination Drawing Prints: Prepare coordination drawing prints according to requirements in Section 013300 "Submittal Procedures."

1.7 REQUEST FOR INFORMATION (RFI)

A. General: Immediately on discovery of the need for additional information, clarification, or interpretation of the Contract Documents, Contractor shall prepare and submit an RFI in the form specified.

1. Landscape Architect will return without response those RFIs submitted to Landscape Architect by other entities controlled by Contractor.
2. Coordinate and submit RFIs in a prompt manner to avoid delays in Contractor's work or work of subcontractors.

B. Content of the RFI: Include a detailed, legible description of item needing information or interpretation and the following:

1. Project name.
2. District name.
3. District's Project number.
4. Name of Landscape Architect and Construction Manager.
5. Landscape Architect's Project number.
6. Date.
7. Name of Contractor.
8. RFI number, numbered sequentially.
9. RFI subject.
10. Specification Section number and title and related paragraphs, as appropriate.
11. Drawing number and detail references, as appropriate.
12. Field dimensions and conditions, as appropriate.
13. Contractor's suggested resolution. If Contractor's suggested resolution impacts the Contract Time or the Contract Sum, Contractor shall state impact in the RFI.
14. Contractor's signature.
15. Attachments: Include sketches, descriptions, measurements, photos, Product Data, Shop Drawings, coordination drawings, and other information necessary to fully describe items needing interpretation.

    a. Include dimensions, thicknesses, structural grid references, and details of affected materials, assemblies, and attachments on attached sketches.

C. RFI Forms: Form bound in Project Manual.

Copyright © 2022 by the American Institute of Architects. Warning: This AIA MasterSpec based document is protected by U.S. Copyright Law and International Treaties. A valid, current MasterSpec license is required for editing or use of this document.

1. Attachments shall be electronic files in PDF format.

D. Landscape Architect's and Construction Manager's Action: Landscape Architect and Construction Manager will review each RFI, determine action required, and respond. Allow seven days for Landscape Architect's response for each RFI. RFIs received by Landscape Architect after 1:00 p.m. will be considered as received the following working day.

1. The following Contractor-generated RFIs will be returned without action:

   a. Requests for approval of submittals.
   b. Requests for approval of substitutions.
   c. Requests for approval of Contractor's means and methods.
   d. Requests for coordination information already indicated in the Contract Documents.
   e. Requests for adjustments in the Contract Time or the Contract Sum.
   f. Requests for interpretation of Landscape Architect's actions on submittals.
   g. Incomplete RFIs or inaccurately prepared RFIs.

2. Landscape Architect's action may include a request for additional information, in which case Landscape Architect's time for response will date from time of receipt by Landscape Architect or Construction Manager of additional information.
3. Landscape Architect's action on RFIs that may result in a change to the Contract Time or the Contract Sum may be eligible for Contractor to submit Change Proposal.

   a. If Contractor believes the RFI response warrants change in the Contract Time or the Contract Sum, notify Landscape Architect and Construction Manager in writing within 5 days of receipt of the RFI response.

E. RFI Log: Prepare, maintain, and submit a tabular log of RFIs organized by the RFI number. Submit log weekly. Include the following:

1. Project name.
2. Name and address of Contractor.
3. Name and address of Landscape Architect and Construction Manager.
4. RFI number, including RFIs that were returned without action or withdrawn.
5. RFI description.
6. Date the RFI was submitted.
7. Date Landscape Architect's and Construction Manager's response was received.
8. Identification of related Minor Change in the Work, Construction Change Directive, and Proposal Request, as appropriate.
9. Identification of related Field Order, Work Change Directive, and Proposal Request, as appropriate.

F. On receipt of Landscape Architect's and Construction Manager's action, update the RFI log and immediately distribute the RFI response to affected parties. Review response and notify Landscape Architect and Construction Manager within seven days if Contractor disagrees with response.

Copyright © 2022 by the American Institute of Architects. Warning: This AIA MasterSpec based document is protected by U.S. Copyright Law and International Treaties. A valid, current MasterSpec license is required for editing or use of this document.

1.8 PROJECT MEETINGS

A. General: Schedule and conduct meetings and conferences at Project site unless otherwise indicated.

1. Attendees: Inform participants and others involved, and individuals whose presence is required, of date and time of each meeting. Notify District and Landscape Architect of scheduled meeting dates and times a minimum of seven days prior to meeting.
2. Agenda: Prepare the meeting agenda. Distribute the agenda to all invited attendees.
3. Minutes: Entity responsible for conducting meeting will record significant discussions and agreements achieved. Distribute the meeting minutes to everyone concerned, including District, Construction Manager, and Landscape Architect, within three days of the meeting.

B. Preconstruction Conference: Schedule and conduct a preconstruction conference before starting construction, at a time convenient to District and Landscape Architect, but no later than 15 days after execution of the Agreement.

1. Attendees: Authorized representatives of District, District's Commissioning Authority, Landscape Architect, and their consultants; Contractor and its superintendent; major subcontractors; suppliers; and other concerned parties shall attend the conference. Participants at the conference shall be familiar with Project and authorized to conclude matters relating to the Work.
2. Agenda: Discuss items of significance that could affect progress, including the following:

a. Responsibilities and personnel assignments.
b. Tentative construction schedule.
c. Phasing.
d. Critical work sequencing and long lead items.
e. Designation of key personnel and their duties.
f. Lines of communications.
g. Use of web-based Project software.
h. Procedures for processing field decisions and Change Orders.
i. Procedures for RFIs.
j. Procedures for testing and inspecting.
k. Procedures for processing Applications for Payment.
l. Distribution of the Contract Documents.
m. Submittal procedures.
n. Sustainable design requirements.
o. Preparation of Record Documents.
p. Use of the premises.
q. Work restrictions.
r. Working hours.
s. District's occupancy requirements.
t. Responsibility for temporary facilities and controls.
u. Procedures for moisture and mold control.
v. Procedures for disruptions and shutdowns.
w. Construction waste management and recycling.
x. Parking availability.
y. Office, work, and storage areas.
z. Equipment deliveries and priorities.

Copyright © 2022 by the American Institute of Architects. Warning: This AIA MasterSpec based document is protected by U.S. Copyright Law and International Treaties. A valid, current MasterSpec license is required for editing or use of this document.

aa. First aid.
bb. Security.
cc. Progress cleaning.

3. Minutes: Entity responsible for conducting meeting will record and distribute meeting minutes.

C. Preinstallation Conferences: Conduct a preinstallation conference at Project site before each construction activity when required by other Sections and when required for coordination with other construction.

1. Attendees: Installer and representatives of manufacturers and fabricators involved in or affected by the installation and its coordination or integration with other materials and installations that have preceded or will follow, shall attend the meeting. Advise Landscape Architect, Construction Manager, and District's Commissioning Authority of scheduled meeting dates.
2. Agenda: Review progress of other construction activities and preparations for the particular activity under consideration, including requirements for the following:

a. Contract Documents.
b. Options.
c. Related RFIs.
d. Related Change Orders.
e. Purchases.
f. Deliveries.
g. Submittals.
h. Sustainable design requirements.
i. Review of mockups.
j. Possible conflicts.
k. Compatibility requirements.
l. Time schedules.
m. Weather limitations.
n. Manufacturer's written instructions.
o. Warranty requirements.
p. Compatibility of materials.
q. Acceptability of substrates.
r. Temporary facilities and controls.
s. Space and access limitations.
t. Regulations of authorities having jurisdiction.
u. Testing and inspecting requirements.
v. Installation procedures.
w. Coordination with other work.
x. Required performance results.
y. Protection of adjacent work.
z. Protection of construction and personnel.

3. Record significant conference discussions, agreements, and disagreements, including required corrective measures and actions.
4. Reporting: Distribute minutes of the meeting to each party present and to other parties requiring information.

Copyright © 2022 by the American Institute of Architects. Warning: This AIA MasterSpec based document is protected by U.S. Copyright Law and International Treaties. A valid, current MasterSpec license is required for editing or use of this document.

5. Do not proceed with installation if the conference cannot be successfully concluded. Initiate whatever actions are necessary to resolve impediments to performance of the Work and reconvene the conference at earliest feasible date.

D. Project Closeout Conference: Schedule and conduct a project closeout conference, at a time convenient to District and Landscape Architect, but no later than 90 days prior to the scheduled date of Substantial Completion.

1. Conduct the conference to review requirements and responsibilities related to Project closeout.
2. Attendees: Authorized representatives of District, District's Commissioning Authority, Construction Manager, Landscape Architect, and their consultants; Contractor and its superintendent; major subcontractors; suppliers; and other concerned parties shall attend the meeting. Participants at the meeting shall be familiar with Project and authorized to conclude matters relating to the Work.
3. Agenda: Discuss items of significance that could affect or delay Project closeout, including the following:

    a. Preparation of Record Documents.
    b. Procedures required prior to inspection for Substantial Completion and for final inspection for acceptance.
    c. Procedures for completing and archiving web-based Project software site data files.
    d. Submittal of written warranties.
    e. Requirements for completing sustainable design documentation.
    f. Requirements for preparing operations and maintenance data.
    g. Requirements for delivery of material samples, attic stock, and spare parts.
    h. Requirements for demonstration and training.
    i. Preparation of Contractor's punch list.
    j. Procedures for processing Applications for Payment at Substantial Completion and for final payment.
    k. Submittal procedures.
    l. Coordination of separate contracts.
    m. District's partial occupancy requirements.
    n. Installation of District's furniture, fixtures, and equipment.
    o. Responsibility for removing temporary facilities and controls.

4. Minutes: Entity conducting meeting will record and distribute meeting minutes.

E. Progress Meetings: Conduct progress meetings at regular intervals.

1. Coordinate dates of meetings with preparation of payment requests.
2. Attendees: In addition to representatives of District, District's Commissioning Authority, Construction Manager, and Landscape Architect, each contractor, subcontractor, supplier, and other entity concerned with current progress or involved in planning, coordination, or performance of future activities shall be represented at these meetings. All participants at the meeting shall be familiar with Project and authorized to conclude matters relating to the Work.
3. Agenda: Review and correct or approve minutes of previous progress meeting. Review other items of significance that could affect progress. Include topics for discussion as appropriate to status of Project.

Copyright © 2022 by the American Institute of Architects. Warning: This AIA MasterSpec based document is protected by U.S. Copyright Law and International Treaties. A valid, current MasterSpec license is required for editing or use of this document.

a. Contractor's Construction Schedule: Review progress since the last meeting. Determine whether each activity is on time, ahead of schedule, or behind schedule, in relation to Contractor's construction schedule. Determine how construction behind schedule will be expedited; secure commitments from parties involved to do so. Discuss whether schedule revisions are required to ensure that current and subsequent activities will be completed within the Contract Time.

1) Review schedule for next period.

b. Review present and future needs of each entity present, including the following:

1) Interface requirements.
2) Sequence of operations.
3) Resolution of BIM component conflicts.
4) Status of submittals.
5) Status of sustainable design documentation.
6) Deliveries.
7) Off-site fabrication.
8) Access.
9) Site use.
10) Temporary facilities and controls.
11) Progress cleaning.
12) Quality and work standards.
13) Status of correction of deficient items.
14) Field observations.
15) Status of RFIs.
16) Status of Proposal Requests.
17) Pending changes.
18) Status of Change Orders.
19) Pending claims and disputes.
20) Documentation of information for payment requests.

4. Minutes: Entity responsible for conducting the meeting will record and distribute the meeting minutes to each party present and to parties requiring information.

a. Schedule Updating: Revise Contractor's construction schedule after each progress meeting, where revisions to the schedule have been made or recognized. Issue revised schedule concurrently with the report of each meeting.

F. Coordination Meetings: Conduct Project coordination meetings at regular intervals. Project coordination meetings are in addition to specific meetings held for other purposes, such as progress meetings and preinstallation conferences.

1. Attendees: In addition to representatives of District, District's Commissioning Authority, Construction Manager, and Landscape Architect, each contractor, subcontractor, supplier, and other entity concerned with current progress or involved in planning, coordination, or performance of future activities shall be represented at these meetings. All participants at the meetings shall be familiar with Project and authorized to conclude matters relating to the Work.

Copyright © 2022 by the American Institute of Architects. Warning: This AIA MasterSpec based document is protected by U.S. Copyright Law and International Treaties. A valid, current MasterSpec license is required for editing or use of this document.

2. Agenda: Review and correct or approve minutes of the previous coordination meeting. Review other items of significance that could affect progress. Include topics for discussion as appropriate to status of Project.

   a. Combined Contractor's Construction Schedule: Review progress since the last coordination meeting. Determine whether each contract is on time, ahead of schedule, or behind schedule, in relation to combined Contractor's construction schedule. Determine how construction behind schedule will be expedited; secure commitments from parties involved to do so. Discuss whether schedule revisions are required to ensure that current and subsequent activities will be completed within the Contract Time.
   b. Schedule Updating: Revise combined Contractor's construction schedule after each coordination meeting, where revisions to the schedule have been made or recognized. Issue revised schedule concurrently with report of each meeting.
   c. Review present and future needs of each contractor present, including the following:

      1) Interface requirements.
      2) Sequence of operations.
      3) Resolution of BIM component conflicts.
      4) Status of submittals.
      5) Deliveries.
      6) Off-site fabrication.
      7) Access.
      8) Site use.
      9) Temporary facilities and controls.
      10) Work hours.
      11) Hazards and risks.
      12) Progress cleaning.
      13) Quality and work standards.
      14) Status of RFIs.
      15) Proposal Requests.
      16) Change Orders.
      17) Pending changes.

3. Reporting: Record meeting results and distribute copies to everyone in attendance and to others affected by decisions or actions resulting from each meeting.

PART 2 - PRODUCTS (Not Used)

PART 3 - EXECUTION (Not Used)

END OF SECTION 013100

Copyright © 2022 by the American Institute of Architects. Warning: This AIA MasterSpec based document is protected by U.S. Copyright Law and International Treaties. A valid, current MasterSpec license is required for editing or use of this document.

SECTION 013300 - SUBMITTAL PROCEDURES

PART 1 - GENERAL

1.1 SUMMARY

A. Section Includes:

1. Submittal schedule requirements.
2. Administrative and procedural requirements for submittals.

B. Related Requirements:

1. Section 013100 "Project Management and Coordination" for submitting coordination drawings and subcontract list and for requirements for web-based Project software.
2. Section 017700 "Closeout Procedures" for submitting closeout submittals and maintenance material submittals.
3. Section 017823 "Operation and Maintenance Data" for submitting operation and maintenance manuals.
4. Section 017839 "Project Record Documents" for submitting record Drawings, record Specifications, and record Product Data.

1.2 DEFINITIONS

A. Action Submittals: Written and graphic information and physical samples that require Landscape Architect's and Construction Manager's responsive action. Action submittals are those submittals indicated in individual Specification Sections as "action submittals."

B. Informational Submittals: Written and graphic information and physical samples that do not require Landscape Architect's and Construction Manager's responsive action. Submittals may be rejected for not complying with requirements. Informational submittals are those submittals indicated in individual Specification Sections as "informational submittals."

1.3 SUBMITTAL SCHEDULE

A. Submittal Schedule: Submit, as an action submittal, a list of submittals, arranged in chronological order by dates required by construction schedule. Include time required for review, ordering, manufacturing, fabrication, and delivery when establishing dates. Include additional time required for making corrections or revisions to submittals noted by Landscape Architect and Construction Manager and additional time for handling and reviewing submittals required by those corrections.

1. Coordinate submittal schedule with list of subcontracts, the schedule of values, and Contractor's construction schedule.
2. Initial Submittal Schedule: Submit concurrently with startup construction schedule. Include submittals required during the first 60 days of construction. List those submittals required to maintain orderly progress of the Work and those required early because of long lead time for manufacture or fabrication.

Copyright © 2022 by the American Institute of Architects. Warning: This AIA MasterSpec based document is protected by U.S. Copyright Law and International Treaties. A valid, current MasterSpec license is required for editing or use of this document.

3. Final Submittal Schedule: Submit concurrently with the first complete submittal of Contractor's construction schedule.

    a. Submit revised submittal schedule as required to reflect changes in current status and timing for submittals.

4. Format: Arrange the following information in a tabular format:

    a. Scheduled date for first submittal.
    b. Specification Section number and title.
    c. Submittal Category: Action; informational.
    d. Name of subcontractor.
    e. Description of the Work covered.
    f. Scheduled date for Landscape Architect's and Construction Manager's final release or approval.
    g. Scheduled dates for purchasing.
    h. Scheduled date of fabrication.
    i. Scheduled dates for installation.
    j. Activity or event number.

1.4 SUBMITTAL FORMATS

A. Submittal Information: Include the following information in each submittal:

1. Project name.
2. Date.
3. Name of Landscape Architect.
4. Name of Construction Manager.
5. Name of Contractor.
6. Name of firm or entity that prepared submittal.
7. Names of subcontractor, manufacturer, and supplier.
8. Unique submittal number, including revision identifier. Include Specification Section number with sequential alphanumeric identifier and alphanumeric suffix for resubmittals.
9. Category and type of submittal.
10. Submittal purpose and description.
11. Number and title of Specification Section, with paragraph number and generic name for each of multiple items.
12. Drawing number and detail references, as appropriate.
13. Indication of full or partial submittal.
14. Location(s) where product is to be installed, as appropriate.
15. Other necessary identification.
16. Remarks.
17. Signature of transmitter.

B. Options: Identify options requiring selection by Landscape Architect.

C. Deviations and Additional Information: On each submittal, clearly indicate deviations from requirements in the Contract Documents, including minor variations and limitations; include relevant additional information and revisions, other than those requested by Landscape

Copyright © 2022 by the American Institute of Architects. Warning: This AIA MasterSpec based document is protected by U.S. Copyright Law and International Treaties. A valid, current MasterSpec license is required for editing or use of this document.

Architect and Construction Manager on previous submittals. Indicate by highlighting on each submittal or noting on attached separate sheet.

D. Paper Submittals:

1. Place a permanent label or title block on each submittal item for identification; include name of firm or entity that prepared submittal.
2. Provide a space approximately 6 by 8 inches on label or beside title block to record Contractor's review and approval markings and action taken by Landscape Architect and Construction Manager.
3. Action Submittals: Submit three paper copies of each submittal unless otherwise indicated. Landscape Architect, through Construction Manager, will return two copies.
4. Informational Submittals: Submit two paper copies of each submittal unless otherwise indicated. Landscape Architect and Construction Manager will not return copies.
5. Additional Copies: Unless additional copies are required for final submittal, and unless Landscape Architect or Construction Manager observes noncompliance with provisions in the Contract Documents, initial submittal may serve as final submittal.
6. Transmittal for Submittals: Assemble each submittal individually and appropriately for transmittal and handling. Transmit each submittal using transmittal form.

E. Electronic Submittals: Prepare submittals as PDF package, incorporating complete information into each PDF file. Name PDF file with submittal number.

F. Submittals Utilizing Web-Based Project Software: Prepare submittals as PDF files or other format indicated by Project management software.

1.5 SUBMITTAL PROCEDURES

A. Prepare and submit submittals required by individual Specification Sections. Types of submittals are indicated in individual Specification Sections.

1. Email: Prepare submittals as PDF package and transmit to Landscape Architect by sending via email. Include PDF transmittal form. Include information in email subject line as requested by Landscape Architect.

   a. Landscape Architect, through Construction Manager, will return annotated file. Annotate and retain one copy of file as a digital Project Record Document file.

2. Web-Based Project Management Software: Prepare submittals in PDF form, and upload to web-based Project management software website. Enter required data in web-based software site to fully identify submittal.
3. Paper: Prepare submittals in paper form and deliver to Landscape Architect.

B. Coordination: Coordinate preparation and processing of submittals with performance of construction activities.

1. Coordinate each submittal with fabrication, purchasing, testing, delivery, other submittals, and related activities that require sequential activity.
2. Submit all submittal items required for each Specification Section concurrently unless partial submittals for portions of the Work are indicated on approved submittal schedule.

Copyright © 2022 by the American Institute of Architects. Warning: This AIA MasterSpec based document is protected by U.S. Copyright Law and International Treaties. A valid, current MasterSpec license is required for editing or use of this document.

3. Submit action submittals and informational submittals required by the same Specification Section as separate packages under separate transmittals.
4. Coordinate transmittal of submittals for related parts of the Work specified in different Sections, so processing will not be delayed because of need to review submittals concurrently for coordination.

    a. Landscape Architect and Construction Manager reserve the right to withhold action on a submittal requiring coordination with other submittals until related submittals are received.

C. Processing Time: Allow time for submittal review, including time for resubmittals, as follows. Time for review shall commence on Landscape Architect's receipt of submittal. No extension of the Contract Time will be authorized because of failure to transmit submittals enough in advance of the Work to permit processing, including resubmittals.

1. Initial Review: Allow 15 days for initial review of each submittal. Allow additional time if coordination with subsequent submittals is required. Landscape Architect Construction Manager will advise Contractor when a submittal being processed must be delayed for coordination.
2. Intermediate Review: If intermediate submittal is necessary, process it in same manner as initial submittal.
3. Resubmittal Review: Allow 15 days for review of each resubmittal.
4. Sequential Review: Where sequential review of submittals by Landscape Architect's consultants, Owner, or other parties is indicated, allow 21 days for initial review of each submittal.
5. Concurrent Consultant Review: Where the Contract Documents indicate that submittals may be transmitted simultaneously to Landscape Architect and to Landscape Architect's consultants, allow 15 days for review of each submittal. Submittal will be returned to Landscape Architect before being returned to Contractor.

    a. Submit one copy of submittal to concurrent reviewer in addition to specified number of copies to Landscape Architect and Construction Manager.

D. Resubmittals: Make resubmittals in same form and number of copies as initial submittal.

1. Note date and content of previous submittal.
2. Note date and content of revision in label or title block, and clearly indicate extent of revision.
3. Resubmit submittals until they are marked with approval notation from Landscape Architect's and Construction Manager's action stamp.

E. Distribution: Furnish copies of final submittals to manufacturers, subcontractors, suppliers, fabricators, installers, authorities having jurisdiction, and others as necessary for performance of construction activities. Show distribution on transmittal forms.

F. Use for Construction: Retain complete copies of submittals on Project site. Use only final action submittals that are marked with approval notation from Landscape Architect's and Construction Manager's action stamp.

Copyright © 2022 by the American Institute of Architects. Warning: This AIA MasterSpec based document is protected by U.S. Copyright Law and International Treaties. A valid, current MasterSpec license is required for editing or use of this document.

1.6 SUBMITTAL REQUIREMENTS

A. Product Data: Collect information into a single submittal for each element of construction and type of product or equipment.

1. If information must be specially prepared for submittal because standard published data are unsuitable for use, submit as Shop Drawings, not as Product Data.
2. Mark each copy of each submittal to show which products and options are applicable.
3. Include the following information, as applicable:

a. Manufacturer's catalog cuts.
b. Manufacturer's product specifications.
c. Standard color charts.
d. Statement of compliance with specified referenced standards.
e. Testing by recognized testing agency.
f. Application of testing agency labels and seals.
g. Notation of coordination requirements.
h. Availability and delivery time information.

4. For equipment, include the following in addition to the above, as applicable:

a. Wiring diagrams that show factory-installed wiring.
b. Printed performance curves.
c. Operational range diagrams.
d. Clearances required to other construction, if not indicated on accompanying Shop Drawings.

5. Submit Product Data before Shop Drawings, and before or concurrently with Samples.

B. Shop Drawings: Prepare Project-specific information, drawn accurately to scale. Do not base Shop Drawings on reproductions of the Contract Documents or standard printed data unless submittal based on Landscape Architect's digital data drawing files is otherwise permitted.

1. Preparation: Fully illustrate requirements in the Contract Documents. Include the following information, as applicable:

a. Identification of products.
b. Schedules.
c. Compliance with specified standards.
d. Notation of coordination requirements.
e. Notation of dimensions established by field measurement.
f. Relationship and attachment to adjoining construction clearly indicated.
g. Seal and signature of professional engineer if specified.

2. Paper Sheet Size: Except for templates, patterns, and similar full-size Drawings, submit Shop Drawings on sheets at least 8-1/2 by 11 inches, but no larger than 30 by 42 inches.

a. Two opaque (bond) copies of each submittal. Landscape Architect, through Construction Manager, will return one copy(ies).

Copyright © 2022 by the American Institute of Architects. Warning: This AIA MasterSpec based document is protected by U.S. Copyright Law and International Treaties. A valid, current MasterSpec license is required for editing or use of this document.

C. Samples: Submit Samples for review of type, color, pattern, and texture for a check of these characteristics with other materials.

1. Transmit Samples that contain multiple, related components, such as accessories together in one submittal package.
2. Identification: Permanently attach label on unexposed side of Samples that includes the following:

    a. Project name and submittal number.
    b. Generic description of Sample.
    c. Product name and name of manufacturer.
    d. Sample source.
    e. Number and title of applicable Specification Section.
    f. Specification paragraph number and generic name of each item.

3. Email Transmittal: Provide PDF transmittal. Include digital image file illustrating Sample characteristics and identification information for record.
4. Web-Based Project Management Software: Prepare submittals in PDF form, and upload to web-based Project software website. Enter required data in web-based software site to fully identify submittal.
5. Paper Transmittal: Include paper transmittal, including complete submittal information indicated.
6. Disposition: Maintain sets of approved Samples at Project site, available for quality-control comparisons throughout the course of construction activity. Sample sets may be used to determine final acceptance of construction associated with each set.

    a. Samples that may be incorporated into the Work are indicated in individual Specification Sections. Such Samples must be in an undamaged condition at time of use.
    b. Samples not incorporated into the Work, or otherwise designated as Owner's property, are the property of Contractor.

7. Samples for Initial Selection: Submit manufacturer's color charts consisting of units or sections of units, showing the full range of colors, textures, and patterns available.

    a. Number of Samples: Submit one full set(s) of available choices where color, pattern, texture, or similar characteristics are required to be selected from manufacturer's product line. Landscape Architect, through Construction Manager, will return submittal with options selected.

8. Samples for Verification: Submit full-size units or Samples of size indicated, prepared from same material to be used for the Work, cured and finished in manner specified, and physically identical with material or product proposed for use, and that show full range of color and texture variations expected. Samples include, but are not limited to, the following: partial sections of manufactured or fabricated components; small cuts or containers of materials; complete units of repetitively used materials; swatches showing color, texture, and pattern; color range sets; and components used for independent testing and inspection.

Copyright © 2022 by the American Institute of Architects. Warning: This AIA MasterSpec based document is protected by U.S. Copyright Law and International Treaties. A valid, current MasterSpec license is required for editing or use of this document.

a. Number of Samples: Submit three sets of Samples. Landscape Architect and Construction Manager will retain two Sample sets; remainder will be returned. Mark up and retain one returned Sample set as a project record Sample.

1) Submit a single Sample where assembly details, workmanship, fabrication techniques, connections, operation, and other similar characteristics are to be demonstrated.
2) If variation in color, pattern, texture, or other characteristic is inherent in material or product represented by a Sample, submit at least three sets of paired units that show approximate limits of variations.

D. Product Schedule: As required in individual Specification Sections, prepare a written summary indicating types of products required for the Work and their intended location. Include the following information in tabular form:

1. Type of product. Include unique identifier for each product indicated in the Contract Documents or assigned by Contractor if none is indicated.
2. Manufacturer and product name, and model number if applicable.
3. Number and name of room or space.
4. Location within room or space.

E. Qualification Data: Prepare written information that demonstrates capabilities and experience of firm or person. Include lists of completed projects with project names and addresses, contact information of Landscape Architects and District, and other information specified.

F. Design Data: Prepare and submit written and graphic information indicating compliance with indicated performance and design criteria in individual Specification Sections. Include list of assumptions and summary of loads. Include load diagrams if applicable. Provide name and version of software, if any, used for calculations. Number each page of submittal.

G. Certificates:

1. Certificates and Certifications Submittals: Submit a statement that includes signature of entity responsible for preparing certification. Certificates and certifications shall be signed by an officer or other individual authorized to sign documents on behalf of that entity. Provide a notarized signature where indicated.
2. Installer Certificates: Submit written statements on manufacturer's letterhead, certifying that Installer complies with requirements in the Contract Documents and, where required, is authorized by manufacturer for this specific Project.
3. Manufacturer Certificates: Submit written statements on manufacturer's letterhead, certifying that manufacturer complies with requirements in the Contract Documents. Include evidence of manufacturing experience where required.
4. Material Certificates: Submit written statements on manufacturer's letterhead, certifying that material complies with requirements in the Contract Documents.
5. Product Certificates: Submit written statements on manufacturer's letterhead, certifying that product complies with requirements in the Contract Documents.
6. Welding Certificates: Prepare written certification that welding procedures and personnel comply with requirements in the Contract Documents. Submit record of AWS B2.1/B2.1M on AWS forms. Include names of firms and personnel certified.

H. Test and Research Reports:

Copyright © 2022 by the American Institute of Architects. Warning: This AIA MasterSpec based document is protected by U.S. Copyright Law and International Treaties. A valid, current MasterSpec license is required for editing or use of this document.

1. Compatibility Test Reports: Submit reports written by a qualified testing agency, on testing agency's standard form, indicating and interpreting results of compatibility tests performed before installation of product. Include written recommendations for substrate preparation and primers required.
2. Field Test Reports: Submit written reports indicating and interpreting results of field tests performed either during installation of product or after product is installed in its final location, for compliance with requirements in the Contract Documents.
3. Material Test Reports: Submit reports written by a qualified testing agency, on testing agency's standard form, indicating and interpreting test results of material for compliance with requirements in the Contract Documents.
4. Preconstruction Test Reports: Submit reports written by a qualified testing agency, on testing agency's standard form, indicating and interpreting results of tests performed before installation of product, for compliance with performance requirements in the Contract Documents.
5. Product Test Reports: Submit written reports indicating that current product produced by manufacturer complies with requirements in the Contract Documents. Base reports on evaluation of tests performed by manufacturer and witnessed by a qualified testing agency, or on comprehensive tests performed by a qualified testing agency.
6. Research Reports: Submit written evidence, from a model code organization acceptable to authorities having jurisdiction, that product complies with building code in effect for Project. Include the following information:

    a. Name of evaluation organization.
    b. Date of evaluation.
    c. Time period when report is in effect.
    d. Product and manufacturers' names.
    e. Description of product.
    f. Test procedures and results.
    g. Limitations of use.

1.7 DELEGATED DESIGN SERVICES

A. Performance and Design Criteria: Where professional design services or certifications by a design professional are specifically required of Contractor by the Contract Documents, provide products and systems complying with specific performance and design criteria indicated.

1. If criteria indicated are insufficient to perform services or certification required, submit a written request for additional information to Landscape Architect.

B. Delegated Design Services Certification: In addition to Shop Drawings, Product Data, and other required submittals, submit digitally signed PDF file and three paper copies of certificate, signed and sealed by the responsible design professional, for each product and system specifically assigned to Contractor to be designed or certified by a design professional.

1. Indicate that products and systems comply with performance and design criteria in the Contract Documents. Include list of codes, loads, and other factors used in performing these services.

Copyright © 2022 by the American Institute of Architects. Warning: This AIA MasterSpec based document is protected by U.S. Copyright Law and International Treaties. A valid, current MasterSpec license is required for editing or use of this document.

1.8 CONTRACTOR'S REVIEW

A. Action Submittals and Informational Submittals: Review each submittal and check for coordination with other Work of the Contract and for compliance with the Contract Documents. Note corrections and field dimensions. Mark with approval stamp before submitting to Landscape Architect and Construction Manager.

B. Contractor's Approval: Indicate Contractor's approval for each submittal with a uniform approval stamp. Include name of reviewer, date of Contractor's approval, and statement certifying that submittal has been reviewed, checked, and approved for compliance with the Contract Documents.

1. Landscape Architect and Construction Manager will not review submittals received from Contractor that do not have Contractor's review and approval.

1.9 LANDSCAPE ARCHITECT'S REVIEW

A. Action Submittals: Landscape Architect will review each submittal, indicate corrections or revisions required, and return.

1. PDF Submittals: Landscape Architect will indicate, via markup on each submittal, the appropriate action.

2. Paper Submittals: Landscape Architect will stamp each submittal with an action stamp and will mark stamp appropriately to indicate action.

B. Informational Submittals: Landscape Architect and Construction Manager will review each submittal and will not return it, or will return it if it does not comply with requirements. Landscape Architect and Construction Manager will forward each submittal to appropriate party.

C. Partial submittals prepared for a portion of the Work will be reviewed when use of partial submittals has received prior approval from Landscape Architect and Construction Manager.

D. Incomplete submittals are unacceptable, will be considered nonresponsive, and will be returned for resubmittal without review.

E. Landscape Architect will discard submittals received from sources other than Contractor.

F. Submittals not required by the Contract Documents will be returned by Landscape Architect without action.

PART 2 - PRODUCTS (Not Used)

PART 3 - EXECUTION (Not Used)

END OF SECTION 013300

Copyright © 2022 by the American Institute of Architects. Warning: This AIA MasterSpec based document is protected by U.S. Copyright Law and International Treaties. A valid, current MasterSpec license is required for editing or use of this document.

SECTION 014000 - QUALITY REQUIREMENTS

PART 1 - GENERAL

1.1 SUMMARY

A. Section includes administrative and procedural requirements for quality assurance and quality control.

B. Testing and inspection services are required to verify compliance with requirements specified or indicated. These services do not relieve Contractor of responsibility for compliance with the Contract Document requirements.

1. Specific quality-assurance and quality-control requirements for individual work results are specified in their respective Specification Sections. Requirements in individual Sections may also cover production of standard products.
2. Specified tests, inspections, and related actions do not limit Contractor's other quality-assurance and quality-control procedures that facilitate compliance with the Contract Document requirements.
3. Requirements for Contractor to provide quality-assurance and quality-control services required by Landscape Architect, District, Construction Manager, or authorities having jurisdiction are not limited by provisions of this Section.

1.2 DEFINITIONS

A. Experienced: When used with an entity or individual, "experienced," unless otherwise further described, means having successfully completed a minimum of five previous projects similar in nature, size, and extent to this Project; being familiar with special requirements indicated; and having complied with requirements of authorities having jurisdiction.

B. Field Quality-Control Tests and Inspections: Tests and inspections that are performed on-site for installation of the Work and for completed Work.

C. Installer/Applicator/Erector: Contractor or another entity engaged by Contractor as an employee, subcontractor, or sub-subcontractor, to perform a particular construction operation, including installation, erection, application, assembly, and similar operations.

1. Use of trade-specific terminology in referring to a Work result does not require that certain construction activities specified apply exclusively to specific trade(s).

D. Mockups: Physical assemblies of portions of the Work constructed to establish the standard by which the Work will be judged. Mockups are not Samples.

1. Mockups are used for one or more of the following:

a. Verify selections made under Sample submittals.
b. Demonstrate aesthetic effects.
c. Demonstrate the qualities of products and workmanship.

Copyright © 2022 by the American Institute of Architects. Warning: This AIA MasterSpec based document is protected by U.S. Copyright Law and International Treaties. A valid, current MasterSpec license is required for editing or use of this document.

d. Demonstrate successful installation of interfaces between components and systems.
e. Perform preconstruction testing to determine system performance.

2. Product Mockups: Mockups that may include multiple products, materials, or systems specified in a single Section.
3. In-Place Mockups: Mockups constructed on-site in their actual final location as part of permanent construction.

E. Preconstruction Testing: Tests and inspections performed specifically for Project before products and materials are incorporated into the Work, to verify performance or compliance with specified criteria. Unless otherwise indicated, copies of reports of tests or inspections performed for other than the Project do not meet this definition.

F. Product Tests: Tests and inspections that are performed by a nationally recognized testing laboratory (NRTL) in accordance with 29 CFR 1910.7, by a testing agency accredited in accordance with NIST's National Voluntary Laboratory Accreditation Program (NVLAP), or by a testing agency qualified to conduct product testing and acceptable to authorities having jurisdiction, to establish product performance and compliance with specified requirements.

G. Source Quality-Control Tests and Inspections: Tests and inspections that are performed at the source (e.g., plant, mill, factory, or shop).

H. Testing Agency: An entity engaged to perform specific tests, inspections, or both. The term "testing laboratory" has the same meaning as the term "testing agency."

I. Quality-Assurance Services: Activities, actions, and procedures performed before and during execution of the Work, to guard against defects and deficiencies and substantiate that proposed construction will comply with requirements.

J. Quality-Control Services: Tests, inspections, procedures, and related actions during and after execution of the Work, to evaluate that actual products incorporated into the Work and completed construction comply with requirements. Contractor's quality-control services do not include contract administration activities performed by Landscape Architect or Construction Manager.

1.3 DELEGATED DESIGN SERVICES

A. Performance and Design Criteria: Where professional design services or certifications by a design professional are specifically required of Contractor by the Contract Documents, provide products and systems complying with specific performance and design criteria indicated.

1. If criteria indicated are not sufficient to perform services or certification required, submit a written request for additional information to Landscape Architect.

B. Delegated Design Services Statement: Submit a statement signed and sealed by the responsible design professional, for each product and system specifically assigned to Contractor to be designed or certified by a design professional, indicating that the products and systems are in compliance with performance and design criteria indicated. Include list of codes, loads, and other factors used in performing these services.

Copyright © 2022 by the American Institute of Architects. Warning: This AIA MasterSpec based document is protected by U.S. Copyright Law and International Treaties. A valid, current MasterSpec license is required for editing or use of this document.

1.4 CONFLICTING REQUIREMENTS

A. Conflicting Standards and Other Requirements: If compliance with two or more standards or requirements is specified and the standards or requirements establish different or conflicting requirements for minimum quantities or quality levels, inform the Landscape Architect regarding the conflict and obtain clarification prior to proceeding with the Work. Refer conflicting requirements that are different, but apparently equal, to Landscape Architect for clarification before proceeding.

B. Minimum Quantity or Quality Levels: The quantity or quality level shown or specified is the minimum provided or performed. The actual installation may comply exactly with the minimum quantity or quality specified, or it may exceed the minimum within reasonable limits. To comply with these requirements, indicated numeric values are minimum or maximum, as appropriate, for the context of requirements. Refer uncertainties to Landscape Architect for a decision before proceeding.

1.5 ACTION SUBMITTALS

A. Mockup Shop Drawings:

1. Include plans, sections, elevations, and details, indicating materials and size of mockup construction.
2. Indicate manufacturer and model number of individual components.
3. Provide axonometric drawings for conditions difficult to illustrate in two dimensions.

1.6 INFORMATIONAL SUBMITTALS

A. Contractor's Quality-Control Plan: For quality-assurance and quality-control activities and responsibilities.

B. Qualification Data: For Contractor's quality-control personnel.

C. Contractor's Statement of Responsibility: When required by authorities having jurisdiction, submit copy of written statement of responsibility submitted to authorities having jurisdiction before starting work on the following systems:

1. Seismic-force-resisting system, designated seismic system, or component listed in the Statement of Special Inspections.
2. Primary wind-force-resisting system or a wind-resisting component listed in the Statement of Special Inspections.

D. Testing Agency Qualifications: For testing agencies specified in "Quality Assurance" Article to demonstrate their capabilities and experience. Include proof of qualifications in the form of a recent report on the inspection of the testing agency by a recognized authority.

E. Schedule of Tests and Inspections: Prepare in tabular form and include the following:

1. Specification Section number and title.
2. Entity responsible for performing tests and inspections.

Copyright © 2022 by the American Institute of Architects. Warning: This AIA MasterSpec based document is protected by U.S. Copyright Law and International Treaties. A valid, current MasterSpec license is required for editing or use of this document.

3. Description of test and inspection.
4. Identification of applicable standards.
5. Identification of test and inspection methods.
6. Number of tests and inspections required.
7. Time schedule or time span for tests and inspections.
8. Requirements for obtaining samples.
9. Unique characteristics of each quality-control service.

F. Reports: Prepare and submit certified written reports and documents as specified.

G. Permits, Licenses, and Certificates: For District's record, submit copies of permits, licenses, certifications, inspection reports, releases, jurisdictional settlements, notices, receipts for fee payments, judgments, correspondence, records, and similar documents established for compliance with standards and regulations bearing on performance of the Work.

1.7 CONTRACTOR'S QUALITY-CONTROL PLAN

A. Quality-Control Plan, General: Submit quality-control plan within 10 days of Notice to Proceed, and not less than five days prior to preconstruction conference. Submit in format acceptable to Landscape Architect. Identify personnel, procedures, controls, instructions, tests, records, and forms to be used to carry out Contractor's quality-assurance and quality-control responsibilities and to coordinate District's quality-assurance and quality-control activities. Coordinate with Contractor's Construction Schedule.

B. Quality-Control Personnel Qualifications: Engage qualified personnel trained and experienced in managing and executing quality-assurance and quality-control procedures similar in nature and extent to those required for Project.

C. Submittal Procedure: Describe procedures for ensuring compliance with requirements through review and management of submittal process. Indicate qualifications of personnel responsible for submittal review.

D. Testing and Inspection: In quality-control plan, include a comprehensive schedule of Work requiring testing or inspection, including the following:

1. Contractor-performed tests and inspections, including subcontractor-performed tests and inspections. Include required tests and inspections and Contractor-elected tests and inspections. Distinguish source quality-control tests and inspections from field quality-control tests and inspections.
2. Special inspections required by authorities having jurisdiction and indicated on the Statement of Special Inspections.
3. District-performed tests and inspections indicated in the Contract Documents, including tests and inspections indicated to be performed by Commissioning Authority.

E. Continuous Inspection of Workmanship: Describe process for continuous inspection during construction to identify and correct deficiencies in workmanship in addition to testing and inspection specified. Indicate types of corrective actions to be required to bring the Work into compliance with standards of workmanship established by Contract requirements and approved mockups.

Copyright © 2022 by the American Institute of Architects. Warning: This AIA MasterSpec based document is protected by U.S. Copyright Law and International Treaties. A valid, current MasterSpec license is required for editing or use of this document.

F. Monitoring and Documentation: Maintain testing and inspection reports, including log of approved and rejected results. Include Work Landscape Architect has indicated as nonconforming or defective. Indicate corrective actions taken to bring nonconforming Work into compliance with requirements. Comply with requirements of authorities having jurisdiction.

1.8 REPORTS AND DOCUMENTS

A. Test and Inspection Reports: Prepare and submit certified written reports specified in other Sections. Include the following:

1. Date of issue.
2. Project title and number.
3. Name, address, telephone number, and email address of testing agency.
4. Dates and locations of samples and tests or inspections.
5. Names of individuals making tests and inspections.
6. Description of the Work and test and inspection method.
7. Identification of product and Specification Section.
8. Complete test or inspection data.
9. Test and inspection results and an interpretation of test results.
10. Record of temperature and weather conditions at time of sample-taking and testing and inspection.
11. Comments or professional opinion on whether tested or inspected Work complies with the Contract Document requirements.
12. Name and signature of laboratory inspector.
13. Recommendations on retesting and reinspecting.

B. Manufacturer's Technical Representative's Field Reports: Prepare written information documenting manufacturer's technical representative's tests and inspections specified in other Sections. Include the following:

1. Name, address, telephone number, and email address of technical representative making report.
2. Statement on condition of substrates and their acceptability for installation of product.
3. Statement that products at Project site comply with requirements.
4. Summary of installation procedures being followed, whether they comply with requirements and, if not, what corrective action was taken.
5. Results of operational and other tests and a statement of whether observed performance complies with requirements.
6. Statement of whether conditions, products, and installation will affect warranty.
7. Other required items indicated in individual Specification Sections.

C. Factory-Authorized Service Representative's Reports: Prepare written information documenting manufacturer's factory-authorized service representative's tests and inspections specified in other Sections. Include the following:

1. Name, address, telephone number, and email address of factory-authorized service representative making report.
2. Statement that equipment complies with requirements.

Copyright © 2022 by the American Institute of Architects. Warning: This AIA MasterSpec based document is protected by U.S. Copyright Law and International Treaties. A valid, current MasterSpec license is required for editing or use of this document.

3. Results of operational and other tests and a statement of whether observed performance complies with requirements.
4. Statement of whether conditions, products, and installation will affect warranty.
5. Other required items indicated in individual Specification Sections.

1.9 QUALITY ASSURANCE

A. Qualifications paragraphs in this article establish the minimum qualification levels required; individual Specification Sections specify additional requirements.

B. Manufacturer Qualifications: A firm experienced in manufacturing products or systems similar to those indicated for this Project and with a record of successful in-service performance, as well as sufficient production capacity to produce required units. As applicable, procure products from manufacturers able to meet qualification requirements, warranty requirements, and technical or factory-authorized service representative requirements.

C. Fabricator Qualifications: A firm experienced in producing products similar to those indicated for this Project and with a record of successful in-service performance, as well as sufficient production capacity to produce required units.

D. Installer Qualifications: A firm or individual experienced in installing, erecting, applying, or assembling work similar in material, design, and extent to that indicated for this Project, whose work has resulted in construction with a record of successful in-service performance.

E. Professional Engineer Qualifications: A professional engineer who is legally qualified to practice in jurisdiction where Project is located and who is experienced in providing engineering services of the kind indicated. Engineering services are defined as those performed for installations of the system, assembly, or product that is similar in material, design, and extent to those indicated for this Project.

F. Specialists: Certain Specification Sections require that specific construction activities be performed by entities who are recognized experts in those operations. Specialists will satisfy qualification requirements indicated and engage in the activities indicated.

1. Requirements of authorities having jurisdiction supersede requirements for specialists.

G. Testing and Inspecting Agency Qualifications: An NRTL, an NVLAP, or an independent agency with the experience and capability to conduct testing and inspection indicated, as documented in accordance with ASTM E329, and with additional qualifications specified in individual Sections; and, where required by authorities having jurisdiction, that is acceptable to authorities.

H. Manufacturer's Technical Representative Qualifications: An authorized representative of manufacturer who is trained and approved by manufacturer to observe and inspect installation of manufacturer's products that are similar in material, design, and extent to those indicated for this Project.

I. Factory-Authorized Service Representative Qualifications: An authorized representative of manufacturer who is trained and approved by manufacturer to inspect, demonstrate, repair, and

Copyright © 2022 by the American Institute of Architects. Warning: This AIA MasterSpec based document is protected by U.S. Copyright Law and International Treaties. A valid, current MasterSpec license is required for editing or use of this document.

perform service on installations of manufacturer's products that are similar in material, design, and extent to those indicated for this Project.

J. Preconstruction Testing: Where testing agency is indicated to perform preconstruction testing for compliance with specified requirements for performance and test methods, comply with the following:

1. Contractor's Responsibilities:

   a. Provide test specimens representative of proposed products and construction.
   b. Submit specimens in a timely manner with sufficient time for testing and analyzing results to prevent delaying the Work.
   c. Provide sizes and configurations of test assemblies, mockups, and laboratory mockups to adequately demonstrate capability of products to comply with performance requirements.
   d. Build site-assembled test assemblies and mockups, using installers who will perform same tasks for Project.
   e. When testing is complete, remove test specimens and test assemblies, and mockups; do not reuse products on Project.

2. Testing Agency Responsibilities: Submit a certified written report of each test, inspection, and similar quality-assurance service to Landscape Architect and Commissioning Authority , through Construction Manager, with copy to Contractor. Interpret tests and inspections, and state in each report whether tested and inspected Work complies with or deviates from the Contract Documents.

K. Mockups: Before installing portions of the Work requiring mockups, build mockups for each form of construction and finish required to comply with the following requirements, using materials indicated for the completed Work:

1. Build mockups of size indicated.
2. Build mockups in location indicated or, if not indicated, as directed by Landscape Architect or Construction Manager.
3. Notify Landscape Architect and Construction Manager seven days in advance of dates and times when mockups will be constructed.
4. Employ supervisory personnel who will oversee mockup construction. Employ workers who will be employed to perform same tasks during the construction at Project.
5. Demonstrate the proposed range of aesthetic effects and workmanship.
6. Obtain Landscape Architect's and Construction Manager's approval of mockups before starting corresponding Work, fabrication, or construction.

   a. Allow seven days for initial review and each re-review of each mockup.

7. Promptly correct unsatisfactory conditions noted by Landscape Architect's preliminary review, to the satisfaction of the Landscape Architect, before completion of final mockup.
8. Approval of mockups by the Landscape Architect does not constitute approval of deviations from the Contract Documents contained in mockups unless Landscape Architect specifically approves such deviations in writing.
9. Maintain mockups during construction in an undisturbed condition as a standard for judging the completed Work.

Copyright © 2022 by the American Institute of Architects. Warning: This AIA MasterSpec based document is protected by U.S. Copyright Law and International Treaties. A valid, current MasterSpec license is required for editing or use of this document.

10. Demolish and remove mockups when directed unless otherwise indicated.

1.10 QUALITY CONTROL

A. District Responsibilities: Where quality-control services are indicated as District's responsibility, District will engage a qualified testing agency to perform these services.

1. District will furnish Contractor with names, addresses, and telephone numbers of testing agencies engaged and a description of types of testing and inspection they are engaged to perform.
2. Costs for retesting and reinspecting construction that replaces or is necessitated by Work that failed to comply with the Contract Documents will be charged to Contractor, and the Contract Sum will be adjusted by Change Order.

B. Contractor Responsibilities: Tests and inspections not explicitly assigned to District are Contractor's responsibility. Perform additional quality-control activities, whether specified or not, to verify and document that the Work complies with requirements.

1. Unless otherwise indicated, provide quality-control services specified and those required by authorities having jurisdiction. Perform quality-control services required of Contractor by authorities having jurisdiction, whether specified or not.
2. Engage a qualified testing agency to perform quality-control services.

    a. Contractor will not employ same entity engaged by District, unless agreed to in writing by District.

3. Notify testing agencies at least 24 hours in advance of time when Work that requires testing or inspection will be performed.
4. Where quality-control services are indicated as Contractor's responsibility, submit a certified written report, in duplicate, of each quality-control service.
5. Testing and inspection requested by Contractor and not required by the Contract Documents are Contractor's responsibility.
6. Submit additional copies of each written report directly to authorities having jurisdiction, when they so direct.

C. Retesting/Reinspecting: Regardless of whether original tests or inspections were Contractor's responsibility, provide quality-control services, including retesting and reinspecting, for construction that replaced Work that failed to comply with the Contract Documents.

D. Testing Agency Responsibilities: Cooperate with Landscape Architect, Commissioning Authority, Construction Manager, and Contractor in performance of duties. Provide qualified personnel to perform required tests and inspections.

1. Notify Landscape Architect, Commissioning Authority, Construction Manager, and Contractor promptly of irregularities or deficiencies observed in the Work during performance of its services.
2. Determine the locations from which test samples will be taken and in which in-situ tests are conducted.
3. Conduct and interpret tests and inspections, and state in each report whether tested and inspected Work complies with or deviates from requirements.

Copyright © 2022 by the American Institute of Architects. Warning: This AIA MasterSpec based document is protected by U.S. Copyright Law and International Treaties. A valid, current MasterSpec license is required for editing or use of this document.

4. Submit a certified written report, in duplicate, of each test, inspection, and similar quality-control service through Contractor.
5. Do not release, revoke, alter, or increase the Contract Document requirements or approve or accept any portion of the Work.
6. Do not perform duties of Contractor.

E. Manufacturer's Field Services: Where indicated, engage a factory-authorized service representative to inspect field-assembled components and equipment installation, including service connections. Report results in writing as specified in Section 013300 "Submittal Procedures."

F. Manufacturer's Technical Services: Where indicated, engage a manufacturer's technical representative to observe and inspect the Work. Manufacturer's technical representative's services include participation in preinstallation conferences, examination of substrates and conditions, verification of materials, observation of Installer activities, inspection of completed portions of the Work, and submittal of written reports.

G. Contractor's Associated Requirements and Services: Cooperate with agencies and representatives performing required tests, inspections, and similar quality-control services, and provide reasonable auxiliary services as requested. Notify agency sufficiently in advance of operations to permit assignment of personnel. Provide the following:

1. Access to the Work.
2. Incidental labor and facilities necessary to facilitate tests and inspections.
3. Adequate quantities of representative samples of materials that require testing and inspection. Assist agency in obtaining samples.
4. Facilities for storage and field curing of test samples.
5. Delivery of samples to testing agencies.
6. Preliminary design mix proposed for use for material mixes that require control by testing agency.
7. Security and protection for samples and for testing and inspection equipment at Project site.

H. Coordination: Coordinate sequence of activities to accommodate required quality-assurance and quality-control services with a minimum of delay and to avoid necessity of removing and replacing construction to accommodate testing and inspection.

1. Schedule times for tests, inspections, obtaining samples, and similar activities.

I. Schedule of Tests and Inspections: Prepare a schedule of tests, inspections, and similar quality-control services required by the Contract Documents as a component of Contractor's quality-control plan. Coordinate and submit concurrently with Contractor's Construction Schedule. Update and submit with each Application for Payment.

1. Schedule Contents: Include tests, inspections, and quality-control services, including Contractor- and District-retained services, commissioning activities, and other Project-required services paid for by other entities.
2. Distribution: Distribute schedule to District, Landscape Architect, Commissioning Authority, Construction Manager, testing agencies, and each party involved in performance of portions of the Work where tests and inspections are required.

Copyright © 2022 by the American Institute of Architects. Warning: This AIA MasterSpec based document is protected by U.S. Copyright Law and International Treaties. A valid, current MasterSpec license is required for editing or use of this document.

1.11 SPECIAL TESTS AND INSPECTIONS

A. Special Tests and Inspections: District will engage a qualified testing agency to conduct special tests and inspections required by authorities having jurisdiction as the responsibility of District, and as follows:

1. Verifying that manufacturer maintains detailed fabrication and quality-control procedures, and reviewing the completeness and adequacy of those procedures to perform the Work.
2. Notifying Landscape Architect, Commissioning Authority,, Construction Manager, and Contractor promptly of irregularities and deficiencies observed in the Work during performance of its services.
3. Submitting a certified written report of each test, inspection, and similar quality-control service to Landscape Architect and Commissioning Authority, through Construction Manager, with copy to Contractor and to authorities having jurisdiction.
4. Submitting a final report of special tests and inspections at Substantial Completion, which includes a list of unresolved deficiencies.
5. Interpreting tests and inspections, and stating in each report whether tested and inspected Work complies with or deviates from the Contract Documents.
6. Retesting and reinspecting corrected Work.

PART 2 - PRODUCTS (Not Used)

PART 3 - EXECUTION

3.1 TEST AND INSPECTION LOG

A. Test and Inspection Log: Prepare a record of tests and inspections. Include the following:

1. Date test or inspection was conducted.
2. Description of the Work tested or inspected.
3. Date test or inspection results were transmitted to Landscape Architect.
4. Identification of testing agency or special inspector conducting test or inspection.

B. Maintain log at Project site. Post changes and revisions as they occur. Provide access to test and inspection log for Landscape Architect's, Commissioning Authority's, and Construction Manager's and authorities' having jurisdiction reference during normal working hours.

1. Submit log at Project closeout as part of Project Record Documents.

3.2 REPAIR AND PROTECTION

A. General: On completion of testing, inspection, sample-taking, and similar services, repair damaged construction and restore substrates and finishes.

1. Provide materials and comply with installation requirements specified in other Specification Sections or matching existing substrates and finishes. Restore patched areas

Copyright © 2022 by the American Institute of Architects. Warning: This AIA MasterSpec based document is protected by U.S. Copyright Law and International Treaties. A valid, current MasterSpec license is required for editing or use of this document.

and extend restoration into adjoining areas with durable seams that are as invisible as possible.

B. Protect construction exposed by or for quality-control service activities.

C. Repair and protection are Contractor's responsibility, regardless of the assignment of responsibility for quality-control services.

END OF SECTION 014000

Copyright © 2022 by the American Institute of Architects. Warning: This AIA MasterSpec based document is protected by U.S. Copyright Law and International Treaties. A valid, current MasterSpec license is required for editing or use of this document.

SECTION 015000 - TEMPORARY FACILITIES AND CONTROLS

PART 1 - GENERAL

1.1 SUMMARY

A. Section includes requirements for temporary utilities, support facilities, and security and protection facilities.

B. Related Requirements:

1. Section 011000 "Summary" for work restrictions and limitations on utility interruptions.

1.2 USE CHARGES

A. Installation, removal, and use charges for temporary facilities to be included in the Contract Sum unless otherwise indicated. Allow other entities engaged in the Project to use temporary services and facilities without cost, including, but not limited to, District's construction forces, Landscape Architect, testing agencies, and authorities having jurisdiction.

B. Sewer Service: Pay sewer-service use charges for sewer usage by all entities for construction operations.

C. Water Service: Pay water-service use charges for water used by all entities for construction operations.

D. Electric Power Service: Pay electric-power-service use charges for electricity used by all entities for construction operations.

E. Water and Sewer Service from Existing System: Water from District's existing water system is available for use with metering. Provide connections and extensions of services and metering as required for construction operations.

F. Electric Power Service from Existing System: Electric power from District's existing system is available for use with metering. Provide connections and extensions of services and metering as required for construction operations.

1.3 INFORMATIONAL SUBMITTALS

A. Site Utilization Plan: Show temporary facilities, temporary utility lines and connections, staging areas, construction site entrances, vehicle circulation, and parking areas for construction personnel.

B. Implementation and Termination Schedule: Within 15 days of date established for commencement of the Work, submit schedule indicating implementation and termination dates of each temporary utility.

Copyright © 2022 by the American Institute of Architects. Warning: This AIA MasterSpec based document is protected by U.S. Copyright Law and International Treaties. A valid, current MasterSpec license is required for editing or use of this document.

C. Project Identification and Temporary Signs: Show fabrication and installation details, including plans, elevations, details, layouts, typestyles, graphic elements, and message content.

D. Fire-Safety Program: Show compliance with requirements of NFPA 241 and authorities having jurisdiction. Indicate Contractor personnel responsible for management of fire-prevention program.

E. Moisture- and Mold-Protection Plan: Describe procedures and controls for protecting materials and construction from water absorption and damage and mold. Describe delivery, handling, storage, installation, and protection provisions for materials subject to water absorption or water damage.

1. Indicate procedures for discarding water-damaged materials, protocols for mitigating water intrusion into completed Work, and requirements for replacing water-damaged Work.
2. Indicate methods to be used to avoid trapping water in finished work.

1.4 QUALITY ASSURANCE

A. Electric Service: Comply with NECA, NEMA, and UL standards and regulations for temporary electric service. Install service to comply with NFPA 70.

B. Tests and Inspections: Arrange for authorities having jurisdiction to test and inspect each temporary utility before use. Obtain required certifications and permits.

C. Accessible Temporary Egress: Comply with applicable provisions in the DOJ's "2010 ADA Standards for Accessible Design" and ICC A117.1.

1.5 PROJECT CONDITIONS

A. Temporary Use of Permanent Facilities: Engage Installer of each permanent service to assume responsibility for operation, maintenance, and protection of each permanent service during its use as a construction facility before District's acceptance, regardless of previously assigned responsibilities.

PART 2 - PRODUCTS

2.1 MATERIALS

A. Chain-Link Fencing: Minimum 2-inch, 0.148-inch- thick, galvanized-steel, chain-link fabric fencing; minimum 6 feet high with galvanized-steel pipe posts; minimum 2-3/8-inch- OD line posts and 2-7/8-inch- OD corner and pull posts[**, with 1-5/8-inch- OD top rails**] [**, with galvanized barbed-wire top strand**].

B. Portable Chain-Link Fencing: Minimum 2-inch, 0.148-inch- thick, galvanized-steel, chain-link fabric fencing; minimum 6 feet high with galvanized-steel pipe posts; minimum 2-3/8-inch- OD line posts and 2-7/8-inch- OD corner and pull posts, with 1-5/8-inch- OD top and bottom rails. Provide [**concrete**] [**galvanized-steel**] bases for supporting posts.

Copyright © 2022 by the American Institute of Architects. Warning: This AIA MasterSpec based document is protected by U.S. Copyright Law and International Treaties. A valid, current MasterSpec license is required for editing or use of this document.

C. Fencing Windscreen Privacy Screen: Polyester fabric scrim with grommets for attachment to chain-link fence, sized to height of fence, in color selected by Landscape Architect from manufacturer's standard colors.

D. Polyethylene Sheet: Reinforced, fire-resistive sheet, 10-mil minimum thickness, with flame-spread rating of 15 or less in accordance with ASTM E84 and passing NFPA 701 Test Method 2.

E. Dust-Control Adhesive-Surface Walk-Off Mats: Provide mats, minimum 36 by 60 inches.

F. Insulation: Unfaced mineral-fiber blanket, manufactured from glass, slag wool, or rock wool; with maximum flame-spread and smoke-developed indexes of 25 and 50, respectively.

2.2 TEMPORARY FACILITIES

A. Field Offices:

1. Prefabricated or mobile units with serviceable finishes, temperature controls, and foundations adequate for normal loading.

B. Storage and Fabrication Sheds: Provide sheds sized, furnished, and equipped to accommodate materials and equipment for construction operations.

1. Store combustible materials apart from building.

2.3 EQUIPMENT

A. Fire Extinguishers: Portable, UL rated; with class and extinguishing agent as required by locations and classes of fire exposures.

PART 3 - EXECUTION

3.1 TEMPORARY FACILITIES, GENERAL

A. Conservation: Coordinate construction and use of temporary facilities with consideration given to conservation of energy, water, and materials. Coordinate use of temporary utilities to minimize waste.

1. Salvage materials and equipment involved in performance of, but not actually incorporated into, the Work. See other Sections for disposition of salvaged materials that are designated as District's property.

3.2 INSTALLATION, GENERAL

A. Locate facilities where they will serve Project adequately and result in minimum interference with performance of the Work. Relocate and modify facilities as required by progress of the Work.

Copyright © 2022 by the American Institute of Architects. Warning: This AIA MasterSpec based document is protected by U.S. Copyright Law and International Treaties. A valid, current MasterSpec license is required for editing or use of this document.

1. Locate facilities to limit site disturbance as specified in Section 011000 "Summary."

B. Provide each facility ready for use when needed to avoid delay. Do not remove until facilities are no longer needed or are replaced by authorized use of completed permanent facilities.

3.3 TEMPORARY UTILITY INSTALLATION

A. General: Install temporary service or connect to existing service.

1. Arrange with utility company, District, and existing users for time when service can be interrupted, if necessary, to make connections for temporary services.

B. Sewers and Drainage: Provide temporary utilities to remove effluent lawfully.

1. Connect temporary sewers to municipal system as directed by authorities having jurisdiction.

C. Water Service:

1. Install water service and distribution piping in sizes and pressures adequate for construction.
2. Connect to District's existing water service facilities. Clean and maintain water service facilities in a condition acceptable to District. At Substantial Completion, restore these facilities to condition existing before initial use.

D. Sanitary Facilities: Provide temporary toilets, wash facilities, safety shower and eyewash facilities, and drinking water for use of construction personnel. Comply with requirements of authorities having jurisdiction for type, number, location, operation, and maintenance of fixtures and facilities.

E. Temporary Heating and Cooling: Provide temporary heating and cooling required by construction activities for curing or drying of completed installations or for protecting installed construction from adverse effects of low temperatures or high humidity. Select equipment that will not have a harmful effect on completed installations or elements being installed.

F. Electric Power Service:

1. Connect to existing electric power service. Maintain equipment in a condition acceptable to District.
2. Provide electric power service and distribution system of sufficient size, capacity, and power characteristics required for construction operations.

a. Install electric power service underground unless otherwise indicated.
b. Connect temporary service to District's existing power source, as directed by District.

G. Lighting: Provide temporary lighting with local switching that provides adequate illumination for construction operations, observations, inspections, and traffic conditions.

1. Install and operate temporary lighting that fulfills security and protection requirements without operating entire system.

Copyright © 2022 by the American Institute of Architects. Warning: This AIA MasterSpec based document is protected by U.S. Copyright Law and International Treaties. A valid, current MasterSpec license is required for editing or use of this document.

H. Telephone Service: Provide temporary telephone service in common-use facilities for use by all construction personnel. Install WiFi cell phone access equipment one land-based telephone line(s) for each field office.

1. At each telephone, post a list of important telephone numbers.

a. Police and fire departments.
b. Ambulance service.
c. Contractor's home office.
d. Contractor's emergency after-hours telephone number.
e. Landscape Architect's office.
f. Construction Manager's home office.
g. Engineers' offices.
h. District's office.
i. Principal subcontractors' field and home offices.

I. Electronic Communication Service: Provide secure WiFi wireless connection to internet with provisions for access by Landscape Architect and District.

3.4 SUPPORT FACILITIES INSTALLATION

A. Comply with the following:

1. Provide construction for temporary field offices, shops, and sheds located within construction area or within 30 feet of building lines that is noncombustible in accordance with ASTM E136. Comply with NFPA 241.
2. Maintain support facilities until Landscape Architect schedules Substantial Completion inspection. Remove before Substantial Completion. Personnel remaining after Substantial Completion will be permitted to use permanent facilities, under conditions acceptable to District.

B. Temporary Roads and Paved Areas: Construct and maintain temporary roads and paved areas adequate for construction operations. Locate temporary roads and paved areas as indicated within construction limits indicated on Drawings.

1. Provide dust-control treatment that is nonpolluting and nontracking. Reapply treatment as required to minimize dust.

C. Temporary Use of Planned Permanent Roads and Paved Areas: Locate temporary roads and paved areas in same location as permanent roads and paved areas. Construct and maintain temporary roads and paved areas adequate for construction operations. Extend temporary roads and paved areas, within construction limits indicated, as necessary for construction operations.

1. Coordinate elevations of temporary roads and paved areas with permanent roads and paved areas.
2. Prepare subgrade and install subbase and base for temporary roads and paved areas in accordance with Section 312000 "Earth Moving."
3. Recondition base after temporary use, including removing contaminated material, regrading, proofrolling, compacting, and testing.

Copyright © 2022 by the American Institute of Architects. Warning: This AIA MasterSpec based document is protected by U.S. Copyright Law and International Treaties. A valid, current MasterSpec license is required for editing or use of this document.

4. Delay installation of final course of permanent hot-mix asphalt pavement until immediately before Substantial Completion. Repair hot-mix asphalt base-course pavement before installation of final course in accordance with Section 321216 "Asphalt Paving."

D. Traffic Controls: Comply with requirements of authorities having jurisdiction.

1. Protect existing site improvements to remain, including curbs, pavement, and utilities.
2. Maintain access for fire-fighting equipment and access to fire hydrants.

E. Parking: Provide temporary offsite parking areas for construction personnel.

F. Storage and Staging: Use designated areas of Project site for storage and staging needs.

G. Dewatering Facilities and Drains: Comply with requirements of authorities having jurisdiction. Maintain Project site, excavations, and construction free of water.

1. Dispose of rainwater in a lawful manner that will not result in flooding Project or adjoining properties or endanger permanent Work or temporary facilities.
2. Remove snow and ice as required to minimize accumulations.

H. Project Signs: Provide Project signs as indicated. Unauthorized signs are not permitted.

1. Identification Signs: Provide Project identification signs as indicated on Drawings.
2. Temporary Signs: Provide other signs as indicated and as required to inform public and individuals seeking entrance to Project.

a. Provide temporary, directional signs for construction personnel and visitors.

3. Maintain and touch up signs, so they are legible at all times.

I. Waste Disposal Facilities:

1. Comply with requirements specified in Section 017419 "Construction Waste Management and Disposal."
2. Provide waste-collection containers in sizes adequate to handle waste from construction operations. Comply with requirements of authorities having jurisdiction.

J. Lifts and Hoists: Provide facilities necessary for hoisting materials and personnel.

1. Truck cranes and similar devices used for hoisting materials are considered "tools and equipment" and not temporary facilities.

3.5 SECURITY AND PROTECTION FACILITIES INSTALLATION

A. Protection of Existing Facilities: Protect existing vegetation, equipment, structures, utilities, and other improvements at Project site and on adjacent properties, except those indicated to be removed or altered. Repair damage to existing facilities.

Copyright © 2022 by the American Institute of Architects. Warning: This AIA MasterSpec based document is protected by U.S. Copyright Law and International Treaties. A valid, current MasterSpec license is required for editing or use of this document.

1. Where access to adjacent properties is required in order to affect protection of existing facilities, obtain written permission from adjacent property District to access property for that purpose.

B. Environmental Protection: Provide protection, operate temporary facilities, and conduct construction as required to comply with environmental regulations and that minimize possible air, waterway, and subsoil contamination or pollution or other undesirable effects.

1. Comply with work restrictions specified in Section 011000 "Summary."

C. Temporary Erosion and Sedimentation Control:

1. Comply with requirements of EPA Construction General Permit or authorities having jurisdiction, whichever is more stringent and requirements specified in Section 311000 "Site Clearing."
2. Provide measures to prevent soil erosion and discharge of soil-bearing water runoff and airborne dust to undisturbed areas and to adjacent properties and walkways, in accordance with erosion- and sedimentation-control Drawings.

a. Verify that flows of water redirected from construction areas or generated by construction activity do not enter or cross tree- or plant-protection zones.
b. Inspect, repair, and maintain erosion- and sedimentation-control measures during construction until permanent vegetation has been established.
c. Clean, repair, and restore adjoining properties and roads affected by erosion and sedimentation from Project site during the course of Project.
d. Remove erosion and sedimentation controls, and restore and stabilize areas disturbed during removal.

D. Stormwater Control: Comply with requirements of authorities having jurisdiction. Provide barriers in and around excavations and subgrade construction to prevent flooding by runoff of stormwater from heavy rains.

E. Tree and Plant Protection:

1. Comply with requirements specified in Section 015639 "Temporary Tree and Plant Protection."
2. Install temporary fencing located as indicated or outside the drip line of trees to protect vegetation from damage from construction operations. Protect tree root systems from damage, flooding, and erosion.

F. Pest Control: Engage pest-control service to recommend practices to minimize attraction and harboring of rodents, roaches, and other pests and to perform extermination and control procedures at regular intervals, so Project will be free of pests and their residues at Substantial Completion. Perform control operations lawfully, using materials approved by authorities having jurisdiction.

G. Site Enclosure Fence: Prior to commencing earthwork, furnish and install site enclosure fence in a manner that will prevent people from easily entering site except by entrance gates.

1. Extent of Fence: As required to enclose entire Project site or portion determined sufficient to accommodate construction operations.

Copyright © 2022 by the American Institute of Architects. Warning: This AIA MasterSpec based document is protected by U.S. Copyright Law and International Treaties. A valid, current MasterSpec license is required for editing or use of this document.

2. Maintain security by limiting number of keys and restricting distribution to authorized personnel. Furnish one set of keys to District.

H. Security Enclosure and Lockup: Install temporary enclosure around partially completed areas of construction. Provide lockable entrances to prevent unauthorized entrance, vandalism, theft, and similar violations of security. Lock entrances at end of each workday.

I. Barricades, Warning Signs, and Lights: Comply with requirements of authorities having jurisdiction for erecting structurally adequate barricades, including warning signs and lighting.

J. Temporary Egress: Provide temporary egress from existing occupied facilities as indicated and as required by authorities having jurisdiction. Provide signage directing occupants to temporary egress.

K. Temporary Enclosures: Provide temporary enclosures for protection of construction, in progress and completed, from exposure, foul weather, other construction operations, and similar activities. Provide temporary weathertight enclosure for building exterior.

1. Where heating or cooling is needed and permanent enclosure is incomplete, insulate temporary enclosures.

L. Temporary Fire Protection: Install and maintain temporary fire-protection facilities of types needed to protect against reasonably predictable and controllable fire losses. Comply with NFPA 241; manage fire-prevention program.

1. Prohibit smoking in construction areas. Comply with additional limits on smoking specified in other Sections.
2. Supervise welding operations, combustion-type temporary heating units, and similar sources of fire ignition in accordance with requirements of authorities having jurisdiction.
3. Develop and supervise an overall fire-prevention and -protection program for personnel at Project site. Review needs with local fire department and establish procedures to be followed. Instruct personnel in methods and procedures. Post warnings and information.
4. Provide temporary standpipes and hoses for fire protection. Hang hoses with a warning sign, stating that hoses are for fire-protection purposes only and are not to be removed. Match hose size with outlet size and equip with suitable nozzles.

3.6 OPERATION, TERMINATION, AND REMOVAL

A. Supervision: Enforce strict discipline in use of temporary facilities. To minimize waste and abuse, limit availability of temporary facilities to essential and intended uses.

B. Maintenance: Maintain facilities in good operating condition until removal.

1. Maintain operation of temporary enclosures, heating, cooling, humidity control, ventilation, and similar facilities on a 24-hour basis where required to achieve indicated results and to avoid possibility of damage.

C. Temporary Facility Changeover: Do not change over from using temporary security and protection facilities to permanent facilities until Substantial Completion.

Copyright © 2022 by the American Institute of Architects. Warning: This AIA MasterSpec based document is protected by U.S. Copyright Law and International Treaties. A valid, current MasterSpec license is required for editing or use of this document.

D. Termination and Removal: Remove each temporary facility when need for its service has ended, when it has been replaced by authorized use of a permanent facility, or no later than Substantial Completion. Complete or, if necessary, restore permanent construction that may have been delayed because of interference with temporary facility. Repair damaged Work, clean exposed surfaces, and replace construction that cannot be satisfactorily repaired.

1. Materials and facilities that constitute temporary facilities are property of Contractor. District reserves right to take possession of Project identification signs.
2. Remove temporary roads and paved areas not intended for or acceptable for integration into permanent construction. Where area is intended for landscape development, remove soil and aggregate fill that do not comply with requirements for fill or subsoil. Remove materials contaminated with road oil, asphalt and other petrochemical compounds, and other substances that might impair growth of plant materials or lawns. Repair or replace street paving, curbs, and sidewalks at temporary entrances, as required by authorities having jurisdiction.
3. At Substantial Completion, repair, renovate, and clean permanent facilities used during construction period. Comply with final cleaning requirements specified in Section 017700 "Closeout Procedures."

END OF SECTION 015000

Copyright © 2022 by the American Institute of Architects. Warning: This AIA MasterSpec based document is protected by U.S. Copyright Law and International Treaties. A valid, current MasterSpec license is required for editing or use of this document.

SECTION 015639 - TEMPORARY TREE AND PLANT PROTECTION

PART 1 - GENERAL

1.1 SUMMARY

A. The Work of this Section Includes: General protection and pruning of existing trees and plants that are affected by execution of the Work, whether temporary or permanent construction.

B. Related Requirements:

1. Section 015000 "Temporary Facilities and Controls" for temporary controls, utilities, support facilities, temporary site fencing, and, if applicable, temporary erosion and sedimentation controls if not specified in Section 311000 "Site Clearing".
2. Section 311000 "Site Clearing" for removing existing trees and shrubs and for temporary erosion- and sedimentation-control measures if not specified in Section 015000 "Temporary Facilities and Controls".

1.2 DEFINITIONS

A. Caliper: Diameter of a trunk measured by a diameter tape or the average of the smallest and largest diameters at a height 6 inches above the ground for trees up to and including 4-inch size at this height and as measured at a height of 12 inches above the ground for trees larger than 4-inch size.

B. Caliper (DBH): Diameter breast height; diameter of a trunk as measured by a diameter tape or the average of the smallest and largest diameters at a height 54 inches above the ground line for trees with caliper of 8 inches or greater as measured at a height of 12 inches above the ground.

C. Plant-Protection Zone: Area surrounding individual trees, groups of trees, shrubs, or other vegetation to be protected during construction and indicated on Drawings.

D. Tree-Protection Zone: Area surrounding individual trees or groups of trees to be protected during construction and indicated on Drawings.

E. Vegetation: Trees, shrubs, groundcovers, grass, and other plants.

1.3 PREINSTALLATION MEETINGS

A. Preinstallation Conference: Conduct conference at Project site.

1. Review methods and procedures related to temporary tree and plant protection including, but not limited to, the following:

a. Tree-service firm's personnel and equipment needed to make progress and avoid delays.
b. Arborist's responsibilities.

Copyright © 2022 by the American Institute of Architects. Warning: This AIA MasterSpec based document is protected by U.S. Copyright Law and International Treaties. A valid, current MasterSpec license is required for editing or use of this document.

c. Quality-control program.
d. Coordination of Work and equipment movement with the locations of protection zones.
e. Trenching by hand or with air spade within protection zones.
f. Field quality control.

1.4 ACTION SUBMITTALS

A. Product Data:

1. General protection and pruning of existing trees and plants that are affected by execution of the Work, whether temporary or permanent construction

B. Shop Drawings:

1. Include plans, elevations, and sections showing trees and plants to be protected, locations of protection-zone fencing and signage, and the relationship between equipment-movement routes and material storage locations with protection zones.
2. Detail fabrication and assembly of protection-zone fencing and signage.
3. Indicate extent of utility boring and trenching by hand or with air spade within protection zones.
4. Include existing irrigation system that will be used to water plants.

C. Samples: For each type of the following:

1. Organic Mulch: 1-quart volume of organic mulch; in sealed plastic bags labeled with composition of materials by percentage of weight and source of mulch.
2. Protection-Zone Fencing: Assembled Samples of manufacturer's standard size made from full-size components.
3. Protection-Zone Signage: Full-size Samples of each size and text, ready for installation.

D. Tree-Pruning Schedule: Written schedule detailing scope and extent of pruning of trees to remain that interfere with or are affected by construction.

1. Species and size of tree.
2. Location on site plan. Include unique identifier for each.
3. Reason for pruning.
4. Description of pruning to be performed.
5. Description of maintenance following pruning.

E. Maintenance Recommendations: From arborist, for care and protection of trees affected by construction during and after completing the Work.

F. Mitigation Requirements: As required by jurisdiction or as developed by arborist, for mitigation of damage to trees and other plantings. Include the following:

1. Local ordinances governing tree mitigation.
2. Standards established under the approved tree mitigation report developed by the arborist.
3. "Digital Guide for Plant Appraisal" by Council of Tree and Landscape Appraisers.

Copyright © 2022 by the American Institute of Architects. Warning: This AIA MasterSpec based document is protected by U.S. Copyright Law and International Treaties. A valid, current MasterSpec license is required for editing or use of this document.

1.5 INFORMATIONAL SUBMITTALS

A. Qualification Statements: For arborist and tree service firm.

B. Certification: From arborist, certifying that trees indicated to remain have been protected during construction in accordance with recognized standards and that trees were promptly and properly treated and repaired when damaged.

C. Maintenance Recommendations: From arborist, for care and protection of trees affected by construction during and after completing the Work.

D. Existing Conditions: Documentation of existing trees and plantings indicated to remain, which establishes preconstruction conditions that might be misconstrued as damage caused by construction activities.

1. Use sufficiently detailed photographs or video recordings.
2. Include plans and notations to indicate specific wounds and damage conditions of each tree or other plants designated to remain.

E. Quality-control program.

1.6 QUALITY ASSURANCE

A. Arborist Qualifications: Certified Arborist as certified by ISA.

B. Tree-Service Firm Qualifications: An experienced tree-service firm that has successfully completed temporary tree- and plant-protection work similar to that required for this Project and that will assign an experienced, qualified arborist to Project site during execution of the Work.

C. Quality-Control Program: Prepare a written program to systematically demonstrate the ability of personnel to properly follow procedures and handle materials and equipment during the Work without damaging trees and plantings. Include dimensioned diagrams for placement of protection-zone fencing and signage, the arborist's and tree-service firm's responsibilities, instructions given to workers on the use and care of protection zones, and enforcement of requirements for protection zones.

1.7 FIELD CONDITIONS

A. The following practices are prohibited within protection zones:

1. Storage of construction materials, debris, or excavated material.
2. Moving or parking vehicles or equipment.
3. Foot traffic.
4. Erection of sheds or structures.
5. Impoundment of water.
6. Excavation or other digging unless otherwise indicated.
7. Attachment of signs to or wrapping materials around trees or plants unless otherwise indicated.

B. Do not direct vehicle or equipment exhaust toward protection zones.

Copyright © 2022 by the American Institute of Architects. Warning: This AIA MasterSpec based document is protected by U.S. Copyright Law and International Treaties. A valid, current MasterSpec license is required for editing or use of this document.

C. Prohibit heat sources, flames, ignition sources, and smoking within or near protection zones and organic mulch.

D. Take precautions to protect plants from airborne contaminants, such as paint or fireproofing overspray.

PART 2 - PRODUCTS

2.1 MATERIALS

A. Backfill Soil: Stockpiled native soil of suitable moisture content and granular texture for placing around tree; free of stones, roots, plants, sod, clods, clay lumps, pockets of coarse sand, concrete slurry, concrete layers or chunks, cement, plaster, building debris, and other extraneous materials harmful to plant growth.

B. Organic Mulch: Free from deleterious materials and suitable as a top dressing for trees and shrubs, consisting of one of the following:

1. Type: Ground or shredded bark .
2. Size Range: 3 inches maximum, 1/2 inch minimum.
3. Color: As indicated on Drawings.

C. Protection-Zone Fencing: Fencing to be as shown in the drawings. Fencing to be fully installed prior to commencement of demolition operations.
1. Gates: Double- swing access gates matching material and appearance of fencing, to allow for maintenance activities within protection zones;

D. Protection-Zone Signage: Shop-fabricated, rigid plastic or metal sheet with attachment holes prepunched and reinforced; waterproof; legibly printed with nonfading lettering and as follows:

1. Size and Text: As indicated on Drawings.
2. Language: In both English and Spanish.
3. Lettering: 3-inch high minimum.

PART 3 - EXECUTION

3.1 EXAMINATION

A. Erosion and Sedimentation Control: Examine the site to verify that temporary erosion- and sedimentation-control measures are in place. Verify that flows of water redirected from construction areas or generated by construction activity do not enter or cross protection zones.

B. Prepare written report, endorsed by arborist, listing conditions detrimental to tree and plant protection.

Copyright © 2022 by the American Institute of Architects. Warning: This AIA MasterSpec based document is protected by U.S. Copyright Law and International Treaties. A valid, current MasterSpec license is required for editing or use of this document.

3.2 PREPARATION

A. Locate and clearly identify trees, shrubs, and other vegetation to remain. Flag each tree trunk at 54 inches above the ground.

B. Protect tree root systems from damage caused by runoff or spillage of noxious materials while mixing, placing, or storing construction materials. Protect root systems from ponding, eroding, or excessive wetting caused by dewatering operations.

3.3 TREE PROTECTION

A. Tree-Protection Zones: Mulch areas inside tree-protection zones and other areas indicated. Do not exceed indicated thickness of mulch.

1. Apply 4-inch uniform thickness of organic mulch unless otherwise indicated. Do not place mulch within 6 inches of tree trunks.
2. Install temporary root-protection matting over mulch to the extent indicated.
3. Install temporary irrigation system prior to demolition. Maintain irrigation levels equal to what is provided prior to start of construction.

3.4 PROTECTION ZONES

A. Protection-Zone Fencing: Install protection-zone fencing as shown on drawings, along edges of protection zones before materials or equipment are brought on the site and construction operations begin in a manner that will prevent people and animals from easily entering protected areas except by entrance gates. Construct fencing so as not to obstruct safe passage or visibility at vehicle intersections where fencing is located adjacent to pedestrian walkways or in close proximity to street intersections, drives, or other vehicular circulation.

1. Chain-Link Fencing: Install to comply with ASTM F567 and with manufacturer's written instructions.
2. Posts: Set or drive posts into ground one-third the total height of the fence without concrete footings. Where a post is located on existing paving or concrete to remain, provide appropriate means of post support acceptable to Landscape Architect.
3. Access Gates: Install where indicated; adjust to operate smoothly, easily, and quietly; free of binding, warp, excessive deflection, distortion, nonalignment, misplacement, disruption, or malfunction throughout entire operational range. Confirm that latches and locks engage accurately and securely without forcing or binding.
4. Plastic Fencing: Stretch fabric taut and secure to posts without bows or sags.

B. Protection-Zone Signage: Install protection-zone signage in visibly prominent locations in a manner approved by Landscape Architect. Install one sign spaced approximately every 50 ft. on protection-zone fencing, but no fewer than four signs with each facing a different direction.

C. Maintain protection zones free of weeds and trash.

D. Maintain hydration of plants to assure plant survival.

Copyright © 2022 by the American Institute of Architects. Warning: This AIA MasterSpec based document is protected by U.S. Copyright Law and International Treaties. A valid, current MasterSpec license is required for editing or use of this document.

E. Maintain protection-zone fencing and signage in good condition as acceptable to Landscape Architect and remove when construction operations are complete and equipment has been removed from the site.

1. Do not remove protection-zone fencing, even temporarily, to allow deliveries or equipment access through the protection zone.
2. Temporary access is permitted subject to preapproval in writing by arborist if a root buffer effective against soil compaction is constructed as directed by arborist. Maintain root buffer so long as access is permitted.

3.5 EXCAVATION

A. General: Excavate at edge of protection zones and for trenches indicated within protection zones in accordance with requirements in Section 312000 "Earth Moving" unless otherwise indicated.

B. Trenching within Protection Zones: Where utility trenches are required within protection zones, excavate under or around tree roots by hand or with air spade, or tunnel under the roots by drilling, auger boring, or pipe jacking. Do not cut main lateral tree roots or taproots; cut only smaller roots that interfere with installation of utilities. Cut roots as required for root pruning. If excavating by hand, use narrow-tine spading forks to comb soil and expose roots.

3.6 ROOT PRUNING

A. Prune tree roots that are affected by temporary and permanent construction. Prune roots as indicated on Drawings and as follows:

1. Cut roots manually by digging a trench and cutting exposed roots with sharp pruning instruments; do not break, tear, chop, or slant the cuts. Do not use a backhoe or other equipment that rips, tears, or pulls roots.
2. Cut Ends: Do not paint cut root ends.
3. Temporarily support and protect roots from damage until they are permanently covered with soil.
4. Cover exposed roots with burlap and water regularly.
5. Backfill as soon as possible in accordance with requirements in Section 312000 "Earth Moving."

B. Root Pruning at Edge of Protection Zone: Prune tree roots 12 inches outside of the protection zone by cleanly cutting all roots to the depth of the required excavation.

C. Root Pruning within Protection Zone: Clear and excavate by hand or with air spade to the depth of the required excavation to minimize damage to tree root systems. If excavating by hand, use narrow-tine spading forks to comb soil to expose roots. Cleanly cut roots as close to excavation as possible.

Copyright © 2022 by the American Institute of Architects. Warning: This AIA MasterSpec based document is protected by U.S. Copyright Law and International Treaties. A valid, current MasterSpec license is required for editing or use of this document.

3.7 CROWN PRUNING

A. Prune branches that are affected by temporary and permanent construction. Prune branches as indicated on Drawings, under direction of arborist.

1. Prune to remove only injured, broken, dying, or dead branches unless otherwise indicated. Do not prune for shape unless otherwise indicated.
2. Do not remove or reduce living branches to compensate for root loss caused by damaging or cutting root system.
3. Pruning Standards: Prune trees in accordance with ANSI A300 (Part 1) and as indicated on Drawings.

B. Unless otherwise directed by arborist and acceptable to Landscape Architect, do not cut tree leaders.

C. Cut branches with sharp pruning instruments; do not break or chop.

D. Do not paint or apply sealants to wounds.

E. Provide subsequent maintenance pruning during Contract period as recommended by arborist.

F. Chip removed branches and dispose of off-site Insert requirement.

3.8 REGRADING

A. Lowering Grade: Where new finish grade is indicated below existing grade around trees, slope grade beyond the protection zone. Maintain existing grades within the protection zone.

B. Lowering Grade within Protection Zone: Where new finish grade is indicated below existing grade around trees, slope grade away from trees as recommended by arborist unless otherwise indicated.

1. Root Pruning: Prune tree roots exposed by lowering the grade. Do not cut main lateral roots or taproots; cut only smaller roots. Cut roots as required for root pruning.

C. Raising Grade: Where new finish grade is indicated above existing grade around trees, slope grade beyond the protection zone. Maintain existing grades within the protection zone.

D. Minor Fill within Protection Zone: Where existing grade is 2 inches or less below elevation of finish grade, fill with backfill soil. Place backfill soil in a single uncompacted layer and hand grade to required finish elevations.

3.9 FIELD QUALITY CONTROL

A. Inspections: Engage a qualified arborist to direct plant-protection measures in the vicinity of trees, shrubs, and other vegetation indicated to remain and to prepare inspection reports.

Copyright © 2022 by the American Institute of Architects. Warning: This AIA MasterSpec based document is protected by U.S. Copyright Law and International Treaties. A valid, current MasterSpec license is required for editing or use of this document.

3.10 REPAIR AND REPLACEMENT

A. General: Repair or replace trees, shrubs, and other vegetation indicated to remain or to be relocated that are damaged by construction operations, in a manner approved by Landscape Architect.

1. Submit details of proposed pruning and repairs.
2. Perform repairs of damaged trunks, branches, and roots within 24 hours in accordance with arborist's written instructions.
3. Replace trees and other plants that cannot be repaired and restored to full-growth status, as determined by Landscape Architect.

B. Trees: Remove and replace trees indicated to remain that are more than 66 percent dead or in an unhealthy condition before the end of the corrections period or are damaged during construction operations that Landscape Architect determines are incapable of restoring to normal growth pattern.

1. Small Trees: Provide new trees of same size and species as those being replaced for each tree that measures 4 inches or smaller in caliper size.
2. Large Trees: Provide two new tree(s) of 6-inch caliper size for each tree being replaced that measures more than 6 inches in caliper size.

a. Species: As selected by Landscape Architect.

C. Soil Aeration: Where directed by Landscape Architect, aerate surface soil compacted during construction. Aerate 10 ft. beyond drip line and no closer than 36 inches to tree trunk. Drill 2-inch- diameter holes a minimum of 12 inches deep at 24 inches o.c. Backfill holes with an equal mix of augered soil and sand.

END OF SECTION 015639

Copyright © 2022 by the American Institute of Architects. Warning: This AIA MasterSpec based document is protected by U.S. Copyright Law and International Treaties. A valid, current MasterSpec license is required for editing or use of this document.

SECTION 016000 - PRODUCT REQUIREMENTS

PART 1 - GENERAL

1.1 SUMMARY

A. The Work of This Section Includes: Administrative and procedural requirements for selection of products for use in Project; product delivery, storage, and handling; manufacturers' standard warranties on products; special warranties; and comparable products.

B. Related Requirements:

1. Section 011000 "Summary" for Contractor requirements related to District-furnished products.
2. Section 012500 "Substitution Procedures" for requests for substitutions.
3. Section 017700 "Closeout Procedures" for submitting warranties.

1.2 DEFINITIONS

A. Products: Items obtained for incorporating into the Work, whether purchased for Project or taken from previously purchased stock. The term "product" includes the terms "material," "equipment," "system," and terms of similar intent.

1. Named Products: Items identified by manufacturer's product name, including make or model number or other designation shown or listed in manufacturer's published product literature that is current as of date of the Contract Documents.
2. New Products: Items that have not previously been incorporated into another project or facility. Salvaged items or items reused from other projects are not considered new products. Items that are manufactured or fabricated to include recycled content materials are considered new products unless otherwise indicated.
3. Comparable Product: Product by named manufacturer that is demonstrated and approved through the comparable product submittal process described in "Comparable Products" Article, to have the indicated qualities related to type, function, dimension, in-service performance, physical properties, appearance, and other characteristics that equal or exceed those of specified product.

B. Basis-of-Design Product Specification: A specification in which a single manufacturer's product is named and accompanied by the words "basis-of-design product," including make or model number or other designation. Published attributes and characteristics of basis-of-design product establish salient characteristics of products.

1. Evaluating Comparable Products: In addition to the basis-of-design product description, product attributes and characteristics may be listed to establish the significant qualities related to type, function, in-service performance and physical properties, weight, dimension, durability, visual characteristics, and other special features and requirements for purposes of evaluating comparable products of additional manufacturers named in the specification. Manufacturer's published attributes and characteristics of basis-of-design

Copyright © 2022 by the American Institute of Architects. Warning: This AIA MasterSpec based document is protected by U.S. Copyright Law and International Treaties. A valid, current MasterSpec license is required for editing or use of this document.

product also establish salient characteristics of products for purposes of evaluating comparable products.

C. Subject to Compliance with Requirements: Where the phrase "Subject to compliance with requirements" introduces a product selection procedure in an individual Specification Section, provide products qualified under the specified product procedure. In the event that a named product or product by a named manufacturer does not meet the other requirements of the specifications, select another named product or product from another named manufacturer that does meet the requirements of the specifications; submit a comparable product request or substitution request, if applicable.

D. Comparable Product Request Submittal: An action submittal requesting consideration of a comparable product, including the following information:

1. Identification of basis-of-design product or fabrication or installation method to be replaced, including Specification Section number and title and Drawing numbers and titles.
2. Data indicating compliance with the requirements specified in "Comparable Products" Article.

E. Basis-of-Design Product Specification Submittal: An action submittal complying with requirements in Section 013300 "Submittal Procedures."

F. Substitution: Refer to Section 012500 "Substitution Procedures" for definition and limitations on substitutions.

1.3 QUALITY ASSURANCE

A. Compatibility of Options: If Contractor is given option of selecting between two or more products for use on Project, select product compatible with products previously selected, even if previously selected products were also options.

1. Resolution of Compatibility Disputes between Multiple Contractors:

a. Contractors are responsible for providing products and construction methods compatible with products and construction methods of other contractors.
b. If a dispute arises between the multiple contractors over concurrently selectable but incompatible products, Landscape Architect will determine which products will be used.

B. Identification of Products: Except for required labels and operating data, do not attach or imprint manufacturer or product names or trademarks on exposed surfaces of products or equipment that will be exposed to view in occupied spaces or on the exterior.

1. Labels: Locate required product labels and stamps on a concealed surface, or, where required for observation following installation, on a visually accessible surface that is inconspicuous.
2. Equipment Nameplates: Provide a permanent nameplate on each item of service- or power-operated equipment. Locate on a visually accessible but inconspicuous surface. Include information essential for operation, including the following:

Copyright © 2022 by the American Institute of Architects. Warning: This AIA MasterSpec based document is protected by U.S. Copyright Law and International Treaties. A valid, current MasterSpec license is required for editing or use of this document.

a. Name of product and manufacturer.
b. Model and serial number.
c. Capacity.
d. Speed.
e. Ratings.

1.4 COORDINATION

A. Modify or adjust affected work as necessary to integrate work of approved comparable products and approved substitutions.

1.5 PRODUCT DELIVERY, STORAGE, AND HANDLING

A. Deliver, store, and handle products, using means and methods that will prevent damage, deterioration, and loss, including theft and vandalism. Comply with manufacturer's written instructions.

B. Delivery and Handling:

1. Schedule delivery to minimize long-term storage at Project site and to prevent overcrowding of construction spaces.
2. Coordinate delivery with installation time to ensure minimum holding time for items that are flammable, hazardous, easily damaged, or sensitive to deterioration, theft, and other losses.
3. Deliver products to Project site in an undamaged condition in manufacturer's original sealed container or other packaging system, complete with labels and instructions for handling, storing, unpacking, protecting, and installing.
4. Inspect products on delivery to determine compliance with the Contract Documents and that products are undamaged and properly protected.

C. Storage:

1. Provide a secure location and enclosure at Project site for storage of materials and equipment.
2. Store products to allow for inspection and measurement of quantity or counting of units.
3. Store materials in a manner that will not endanger Project structure.
4. Store products that are subject to damage by the elements under cover in a weathertight enclosure above ground, with ventilation adequate to prevent condensation and with adequate protection from wind.
5. Protect foam plastic from exposure to sunlight, except to extent necessary for period of installation and concealment.
6. Comply with product manufacturer's written instructions for temperature, humidity, ventilation, and weather-protection requirements for storage.
7. Protect stored products from damage and liquids from freezing.
8. Provide a secure location and enclosure at Project site for storage of materials and equipment by District's construction forces. Coordinate location with District.

Copyright © 2022 by the American Institute of Architects. Warning: This AIA MasterSpec based document is protected by U.S. Copyright Law and International Treaties. A valid, current MasterSpec license is required for editing or use of this document.

1.6 PRODUCT WARRANTIES

A. Warranties specified in other Sections are to be in addition to, and run concurrent with, other warranties required by the Contract Documents. Manufacturer's disclaimers and limitations on product warranties do not relieve Contractor of obligations under requirements of the Contract Documents.

1. Manufacturer's Warranty: Written standard warranty form furnished by individual manufacturer for a particular product and issued in the name of District or endorsed by manufacturer to District.
2. Special Warranty: Written warranty required by the Contract Documents to provide specific rights for District and issued in the name of District or endorsed by manufacturer to District.

B. Special Warranties: Prepare a written document that contains appropriate terms and identification, ready for execution.

1. Manufacturer's Standard Form: Modified to include Project-specific information and properly executed.
2. Specified Form: When specified forms are included in the Project Manual, prepare a written document, using indicated form properly executed.
3. See other Sections for specific content requirements and particular requirements for submitting special warranties.

C. Submittal Time: Comply with requirements in Section 017700 "Closeout Procedures."

PART 2 - PRODUCTS

2.1 PRODUCT SELECTION PROCEDURES

A. General Product Requirements: Provide products that comply with the Contract Documents, are undamaged and, unless otherwise indicated, are new at time of installation.

1. Provide products complete with accessories, trim, finish, fasteners, and other items needed for a complete installation and indicated use and effect.
2. Standard Products: If available, and unless custom products or nonstandard options are specified, provide standard products of types that have been produced and used successfully in similar situations on other projects.
3. District reserves the right to limit selection to products with warranties meeting requirements of the Contract Documents.
4. Where products are accompanied by the term "as selected," Landscape Architect will make selection.
5. Descriptive, performance, and reference standard requirements in Specifications establish salient characteristics of products.
6. Or Equal: For products specified by name and accompanied by the term "or equal," "or approved equal," or "or approved," comply with requirements in "Comparable Products" Article to obtain approval for use of an unnamed product.

Copyright © 2022 by the American Institute of Architects. Warning: This AIA MasterSpec based document is protected by U.S. Copyright Law and International Treaties. A valid, current MasterSpec license is required for editing or use of this document.

a. Submit additional documentation required by Landscape Architect through Construction Manager in order to establish equivalency of proposed products. Unless otherwise indicated, evaluation of "or equal" product status is by Landscape Architect, whose determination is final.

B. Product Selection Procedures:

1. Sole Product: Where Specifications name a single manufacturer and product, provide the named product that complies with requirements. Comparable products or substitutions for Contractor's convenience will not be considered.

   a. Sole product may be indicated by the phrase "Subject to compliance with requirements, provide the following."

2. Sole Manufacturer/Source: Where Specifications name a single manufacturer or source, provide a product by the named manufacturer or source that complies with requirements. Comparable products or substitutions for Contractor's convenience will not be considered.

   a. Sole manufacturer/source may be indicated by the phrase "Subject to compliance with requirements, provide products by the following."

3. Limited List of Products: Where Specifications include a list of names of both manufacturers and products, provide one of the products listed that complies with requirements. Comparable products or substitutions for Contractor's convenience will not be considered.

   a. Limited list of products may be indicated by the phrase "Subject to compliance with requirements, provide one of the following."

4. Non-Limited List of Products: Where Specifications include a list of names of both available manufacturers and products, provide one of the products listed or an unnamed product that complies with requirements.

   a. Non-limited list of products is indicated by the phrase "Subject to compliance with requirements, available products that may be incorporated in the Work include, but are not limited to, the following."
   b. Provision of an unnamed product is not considered a substitution, if the product complies with requirements.

5. Limited List of Manufacturers: Where Specifications include a list of manufacturers' names, provide a product by one of the manufacturers listed that complies with requirements. Comparable products or substitutions for Contractor's convenience will not be considered.

   a. Limited list of manufacturers is indicated by the phrase "Subject to compliance with requirements, provide products by one of the following."

6. Non-Limited List of Manufacturers: Where Specifications include a list of available manufacturers, provide a product by one of the manufacturers listed or a product by an unnamed manufacturer that complies with requirements.

Copyright © 2022 by the American Institute of Architects. Warning: This AIA MasterSpec based document is protected by U.S. Copyright Law and International Treaties. A valid, current MasterSpec license is required for editing or use of this document.

a. Non-limited list of manufacturers is indicated by the phrase "Subject to compliance with requirements, available manufacturers whose products may be incorporated in the Work include, but are not limited to, the following."
b. Provision of products of an unnamed manufacturer is not considered a substitution, if the product complies with requirements.

7. Basis-of-Design Product: Where Specifications name a product, or refer to a product indicated on Drawings, and include a list of manufacturers, provide the specified or indicated product or a comparable product by one of the other named manufacturers. Drawings and Specifications may additionally indicate sizes, profiles, dimensions, and other characteristics that are based on the product named. Comply with requirements in "Comparable Products" Article for consideration of an unnamed product by one of the other named manufacturers.

a. For approval of products by unnamed manufacturers, comply with requirements in Section 012500 "Substitution Procedures" for substitutions for convenience.

C. Visual Matching Specification: Where Specifications require the phrase "match Landscape Architect's sample," provide a product that complies with requirements and matches Landscape Architect's sample. Landscape Architect's decision will be final on whether a proposed product matches.

1. If no product available within specified category matches and complies with other specified requirements, comply with requirements in Section 012500 "Substitution Procedures" for proposal of product.

D. Visual Selection Specification: Where Specifications include the phrase "as selected by Landscape Architect from manufacturer's full range" or a similar phrase, select a product that complies with requirements. Landscape Architect will select color, gloss, pattern, density, or texture from manufacturer's product line that includes both standard and premium items.

E. Sustainable Product Selection: Where Specifications require product to meet sustainable product characteristics, select products complying with indicated requirements. Comply with requirements in Division 01 sustainability requirements Section and individual Specification Sections.

1. Select products for which sustainable design documentation submittals are available from manufacturer.

2.2 COMPARABLE PRODUCTS

A. Conditions for Consideration of Comparable Products: Landscape Architect will consider Contractor's request for comparable product when the following conditions are satisfied. If the following conditions are not satisfied, Landscape Architect may return requests without action, except to record noncompliance with the following requirements:

1. Evidence that proposed product does not require revisions to the Contract Documents, is consistent with the Contract Documents, will produce the indicated results, and is compatible with other portions of the Work.

Copyright © 2022 by the American Institute of Architects. Warning: This AIA MasterSpec based document is protected by U.S. Copyright Law and International Treaties. A valid, current MasterSpec license is required for editing or use of this document.

2. Detailed comparison of significant qualities of proposed product with those of the named basis-of-design product. Significant product qualities include attributes such as type, function, in-service performance and physical properties, weight, dimension, durability, visual characteristics, and other specific features and requirements.
3. Evidence that proposed product provides specified warranty.
4. List of similar installations for completed projects, with project names and addresses and names and addresses of Landscape Architects and Districts, if requested.
5. Samples, if requested.

B. Landscape Architect's Action on Comparable Products Submittal: If necessary, Landscape Architect will request additional information or documentation for evaluation within seven days of receipt of a request for a comparable product. Landscape Architect will notify Contractor through Construction Manager of approval or rejection of proposed comparable product within 15 days of receipt of request, or seven days of receipt of additional information or documentation, whichever is later.

1. Landscape Architect's Approval of Submittal: Marked with approval notation from Landscape Architect's action stamp. See Section 013300 "Submittal Procedures."
2. Use product specified if Landscape Architect does not issue a decision on use of a comparable product request within time allocated.

C. Submittal Requirements, Two-Step Process: Approval by Landscape Architect of Contractor's request for use of comparable product is not intended to satisfy other submittal requirements. Comply with specified submittal requirements.

D. Submittal Requirements, Single-Step Process: When acceptable to Landscape Architect, incorporate specified submittal requirements of individual Specification Section in combined submittal for comparable products. Approval by Landscape Architect of Contractor's request for use of comparable product and of individual submittal requirements will also satisfy other submittal requirements.

PART 3 - EXECUTION (Not Used)

END OF SECTION 016000

Copyright © 2022 by the American Institute of Architects. Warning: This AIA MasterSpec based document is protected by U.S. Copyright Law and International Treaties. A valid, current MasterSpec license is required for editing or use of this document.

SECTION 017419 - CONSTRUCTION WASTE MANAGEMENT AND DISPOSAL

PART 1 - GENERAL

1.1 RELATED DOCUMENTS

A. Drawings and general provisions of the Contract, including General and Supplementary Conditions and other Division 01 Specification Sections, apply to this Section.

1.2 SUMMARY

A. Section includes administrative and procedural requirements for the following:

1. Salvaging nonhazardous construction waste.
2. Recycling nonhazardous construction waste.
3. Disposing of nonhazardous construction waste.

B. Related Requirements:
1. Section 311000 "Site Clearing" for disposition of waste resulting from site clearing and removal of above- and below-grade improvements.

1.3 DEFINITIONS

A. Construction Waste: Building, structure, and site improvement materials and other solid waste resulting from construction, remodeling, renovation, or repair operations. Construction waste includes packaging.

B. Demolition Waste: Building, structure, and site improvement materials resulting from demolition operations.

C. Disposal: Removal of demolition or construction waste and subsequent salvage, sale, recycling, or deposit in landfill, incinerator acceptable to authorities having jurisdiction, or designated spoil areas on District's property.

D. Recycle: Recovery of demolition or construction waste for subsequent processing in preparation for reuse.

E. Salvage: Recovery of demolition or construction waste and subsequent sale or reuse in another facility.

F. Salvage and Reuse: Recovery of demolition or construction waste and subsequent incorporation into the Work.

1.4 MATERIALS OWNERSHIP

A. Unless otherwise indicated, demolition and construction waste becomes property of Contractor.

Copyright © 2022 by the American Institute of Architects. Warning: This AIA MasterSpec based document is protected by U.S. Copyright Law and International Treaties. A valid, current MasterSpec license is required for editing or use of this document.

B. Historic items, relics, antiques, and similar objects including, but not limited to, cornerstones and their contents, commemorative plaques and tablets, and other items of interest or value to District that may be uncovered during demolition remain the property of District.

1. Carefully salvage in a manner to prevent damage and promptly return to District.

1.5 ACTION SUBMITTALS

A. Waste Management Plan: Submit plan within 7 days of date established for commencement of the Work.

1.6 INFORMATIONAL SUBMITTALS

A. Waste Reduction Progress Reports: Concurrent with each Application for Payment, submit report. Use Form CWM-7 for construction waste. Include the following information:

1. Material category.
2. Generation point of waste.
3. Total quantity of waste in tons.
4. Quantity of waste salvaged, both estimated and actual in tons.
5. Quantity of waste recycled, both estimated and actual in tons.
6. Total quantity of waste recovered (salvaged plus recycled) in tons.
7. Total quantity of waste recovered (salvaged plus recycled) as a percentage of total waste.

B. Waste Reduction Calculations: Before request for Substantial Completion, submit calculated end-of-Project rates for salvage, recycling, and disposal as a percentage of total waste generated by the Work.

C. Records of Donations: Indicate receipt and acceptance of salvageable waste donated to individuals and organizations. Indicate whether organization is tax exempt.

D. Records of Sales: Indicate receipt and acceptance of salvageable waste sold to individuals and organizations. Indicate whether organization is tax exempt.

E. Recycling and Processing Facility Records: Indicate receipt and acceptance of recyclable waste by recycling and processing facilities licensed to accept them. Include manifests, weight tickets, receipts, and invoices.

F. Landfill and Incinerator Disposal Records: Indicate receipt and acceptance of waste by landfills and incinerator facilities licensed to accept them. Include manifests, weight tickets, receipts, and invoices.

G. Qualification Data: For waste management coordinator.

1.7 QUALITY ASSURANCE

A. Waste Management Coordinator Qualifications: Experienced firm, or individual employed and assigned by General Contractor, with a record of successful waste management coordination of

Copyright © 2022 by the American Institute of Architects. Warning: This AIA MasterSpec based document is protected by U.S. Copyright Law and International Treaties. A valid, current MasterSpec license is required for editing or use of this document.

projects with similar requirements. Superintendent may not serve as Waste Management Coordinator.

B. Regulatory Requirements: Comply with transportation and disposal regulations of authorities having jurisdiction.

C. Waste Management Conference(s): Conduct conference(s) at Project site to comply with requirements in Section 013100 "Project Management and Coordination." Review methods and procedures related to waste management including, but not limited to, the following:

1. Review and discuss waste management plan including responsibilities of each contractor and waste management coordinator.
2. Review requirements for documenting quantities of each type of waste and its disposition.
3. Review and finalize procedures for materials separation and verify availability of containers and bins needed to avoid delays.
4. Review procedures for periodic waste collection and transportation to recycling and disposal facilities.
5. Review waste management requirements for each trade.

1.8 WASTE MANAGEMENT PLAN

A. General: Develop a waste management plan according to requirements in this Section. Plan shall consist of waste identification, waste reduction work plan, and cost/revenue analysis. Distinguish between demolition and construction waste. Indicate quantities by weight or volume, but use same units of measure throughout waste management plan.

B. Waste Identification: Indicate anticipated types and quantities of site-clearing and construction waste generated by the Work. Use Form CWM-1 for construction waste and Form CWM-2 for demolition waste. Include estimated quantities and assumptions for estimates.

C. Waste Reduction Work Plan: List each type of waste and whether it will be salvaged, recycled, or disposed of in landfill or incinerator. Use Form CWM-3 for construction waste. Include points of waste generation, total quantity of each type of waste, quantity for each means of recovery, and handling and transportation procedures.

1. Salvaged Materials for Reuse: For materials that will be salvaged and reused in this Project, describe methods for preparing salvaged materials before incorporation into the Work in compliance with Section 024119 "Selective Demolition."
2. Salvaged Materials for Sale: For materials that will be sold to individuals and organizations, include list of their names, addresses, and telephone numbers.
3. Salvaged Materials for Donation: For materials that will be donated to individuals and organizations, include list of their names, addresses, and telephone numbers.
4. Recycled Materials: Include list of local receivers and processors and type of recycled materials each will accept. Include names, addresses, and telephone numbers.
5. Disposed Materials: Indicate how and where materials will be disposed of. Include name, address, and telephone number of each landfill and incinerator facility.
6. Handling and Transportation Procedures: Include method that will be used for separating recyclable waste including sizes of containers, container labeling, and designated location where materials separation will be performed.

Copyright © 2022 by the American Institute of Architects. Warning: This AIA MasterSpec based document is protected by U.S. Copyright Law and International Treaties. A valid, current MasterSpec license is required for editing or use of this document.

D. Cost/Revenue Analysis: Indicate total cost of waste disposal as if there were no waste management plan and net additional cost or net savings resulting from implementing waste management plan. Use Form CWM-5 for construction waste. Include the following:

1. Total quantity of waste.
2. Estimated cost of disposal (cost per unit). Include transportation and tipping fees and cost of collection containers and handling for each type of waste.
3. Total cost of disposal (with no waste management).
4. Revenue from salvaged materials.
5. Revenue from recycled materials.
6. Savings in transportation and tipping fees by donating materials.
7. Savings in transportation and tipping fees that are avoided.
8. Handling and transportation costs. Include cost of collection containers for each type of waste.
9. Net additional cost or net savings from waste management plan.

PART 2 - PRODUCTS

2.1 RECYCLING RECEIVERS AND PROCESSORS

A. Subject to compliance with requirements, available recycling receivers and processors include, but are not limited to, the following:

PART 3 - EXECUTION

3.1 PLAN IMPLEMENTATION

A. General: Implement approved waste management plan. Provide handling, containers, storage, signage, transportation, and other items as required to implement waste management plan during the entire duration of the Contract.

1. Comply with operation, termination, and removal requirements in Section 015000 "Temporary Facilities and Controls."

B. Waste Management Coordinator: Engage a waste management coordinator to be responsible for implementing, monitoring, and reporting status of waste management work plan. Coordinator shall be present at Project site full time for duration of Project.

C. Training: Train workers, subcontractors, and suppliers on proper waste management procedures, as appropriate for the Work.

1. Distribute waste management plan to everyone concerned within three days of submittal return.
2. Distribute waste management plan to entities when they first begin work on-site. Review plan procedures and locations established for salvage, recycling, and disposal.

Copyright © 2022 by the American Institute of Architects. Warning: This AIA MasterSpec based document is protected by U.S. Copyright Law and International Treaties. A valid, current MasterSpec license is required for editing or use of this document.

D. Site Access and Temporary Controls: Conduct waste management operations to ensure minimum interference with roads, streets, walks, walkways, and other adjacent occupied and used facilities.

1. Designate and label specific areas on Project site necessary for separating materials that are to be salvaged and recycled.
2. Comply with Section 015000 "Temporary Facilities and Controls" for controlling dust and dirt, environmental protection, and noise control.

3.2 RECYCLING DEMOLITION AND CONSTRUCTIONWASTE, GENERAL

A. General: Recycle paper and beverage containers used by on-site workers.

B. Recycling Incentives: Revenues, savings, rebates, tax credits, and other incentives received for recycling waste materials shall accrue to Contractor.

C. Preparation of Waste: Prepare and maintain recyclable waste materials according to recycling or reuse facility requirements. Maintain materials free of dirt, adhesives, solvents, petroleum contamination, and other substances deleterious to the recycling process.

D. Procedures: Separate recyclable waste from other waste materials, trash, and debris. Separate recyclable waste by type at Project site to the maximum extent practical according to approved construction waste management plan.

1. Provide appropriately marked containers or bins for controlling recyclable waste until removed from Project site. Include list of acceptable and unacceptable materials at each container and bin.

    a. Inspect containers and bins for contamination and remove contaminated materials if found.

2. Stockpile processed materials on-site without intermixing with other materials. Place, grade, and shape stockpiles to drain surface water. Cover to prevent windblown dust.
3. Stockpile materials away from construction area. Do not store within drip line of remaining trees.
4. Store components off the ground and protect from the weather.
5. Remove recyclable waste from District's property and transport to recycling receiver or processor as often as required to prevent overfilling bins.

3.3 RECYCLING DEMOLITION WASTE

A. Asphalt Paving: Grind asphalt to maximum 1-1/2-inch size.

1. Crush asphaltic concrete paving and screen to comply with requirements in Section 312000 "Earth Moving" for use as general fill.

B. Asphalt Paving: Break up and transport paving to asphalt-recycling facility.

C. Concrete: Remove reinforcement and other metals from concrete and sort with other metals.

Copyright © 2022 by the American Institute of Architects. Warning: This AIA MasterSpec based document is protected by U.S. Copyright Law and International Treaties. A valid, current MasterSpec license is required for editing or use of this document.

1. Pulverize concrete to maximum 1-1/2-inch size.
2. Crush concrete and screen to comply with requirements in Section 312000 "Earth Moving" for use as satisfactory soil for fill or subbase.

D. Wood Materials: Sort and stack members according to size, type, and length. Separate lumber, engineered wood products, panel products, and treated wood materials.

E. Metals: Separate metals by type.

1. Structural Steel: Stack members according to size, type of member, and length.
2. Remove and dispose of bolts, nuts, washers, and other rough hardware.

F. Piping: Reduce piping to straight lengths and store by material and size. Separate supports, hangers, valves, sprinklers, and other components by material and size.

G. Conduit: Reduce conduit to straight lengths and store by material and size.

3.4 RECYCLING CONSTRUCTION WASTE

A. Packaging:

1. Cardboard and Boxes: Break down packaging into flat sheets. Bundle and store in a dry location.
2. Polystyrene Packaging: Separate and bag materials.
3. Pallets: As much as possible, require deliveries using pallets to remove pallets from Project site. For pallets that remain on-site, break down pallets into component wood pieces and comply with requirements for recycling wood.
4. Crates: Break down crates into component wood pieces and comply with requirements for recycling wood.

B. Wood Materials:

1. Clean Cut-Offs of Lumber: Grind or chip into small pieces.
2. Clean Sawdust: Bag sawdust that does not contain painted or treated wood.

a. Comply with requirements in Section 329300 "Plants" for use of clean sawdust as organic mulch.

C. Paint: Seal containers and store by type.

3.5 DISPOSAL OF WASTE

A. General: Except for items or materials to be salvaged or recycled, remove waste materials from Project site and legally dispose of them in a landfill or incinerator acceptable to authorities having jurisdiction.

1. Except as otherwise specified, do not allow waste materials that are to be disposed of accumulate on-site.
2. Remove and transport debris in a manner that will prevent spillage on adjacent surfaces and areas.

Copyright © 2022 by the American Institute of Architects. Warning: This AIA MasterSpec based document is protected by U.S. Copyright Law and International Treaties. A valid, current MasterSpec license is required for editing or use of this document.

B. General: Except for items or materials to be salvaged or recycled, remove waste materials and legally dispose of at designated spoil areas on District's property.

C. Burning: Do not burn waste materials.

END OF SECTION 017419

Copyright © 2022 by the American Institute of Architects. Warning: This AIA MasterSpec based document is protected by U.S. Copyright Law and International Treaties. A valid, current MasterSpec license is required for editing or use of this document.

SECTION 017700 - CLOSEOUT PROCEDURES

PART 1 - GENERAL

1.1 SUMMARY

A. Section includes administrative and procedural requirements for Contract closeout, including, but not limited to, the following:

1. Substantial Completion procedures.
2. Final Completion procedures.
3. List of incomplete items.
4. Submittal of Project warranties.
5. Final cleaning.

B. Related Requirements:
1. Section 017823 "Operation and Maintenance Data" for additional operation and maintenance manual requirements.
2. Section 017839 "Project Record Documents" for submitting Record Drawings, Record Specifications, and Record Product Data.

1.2 DEFINITIONS

A. List of Incomplete Items: Contractor-prepared list of items to be completed or corrected, prepared for the Landscape Architect's use prior to Landscape Architect's inspection, to determine if the Work is substantially complete.

1.3 ACTION SUBMITTALS

A. Product Data: For each type of cleaning agent.

B. Contractor's List of Incomplete Items: Initial submittal at Substantial Completion.

C. Certified List of Incomplete Items: Final submittal at Final Completion.

1.4 CLOSEOUT SUBMITTALS

A. Certificates of Release: From authorities having jurisdiction.

B. Certificate of Insurance: For continuing coverage.

C. Field Report: For pest-control inspection.

Copyright © 2022 by the American Institute of Architects. Warning: This AIA MasterSpec based document is protected by U.S. Copyright Law and International Treaties. A valid, current MasterSpec license is required for editing or use of this document.

1.5 MAINTENANCE MATERIAL SUBMITTALS

A. Schedule of Maintenance Material Items: For maintenance material submittal items required by other Sections.

1.6 SUBSTANTIAL COMPLETION PROCEDURES

A. Contractor's List of Incomplete Items: Prepare and submit a list of items to be completed and corrected (Contractor's "punch list"), indicating the value of each item on the list and reasons why the Work is incomplete.

B. Submittals Prior to Substantial Completion: Complete the following a minimum of 10 days prior to requesting inspection for determining date of Substantial Completion. List items below that are incomplete at time of request.

1. Certificates of Release: Obtain and submit releases from authorities having jurisdiction, permitting District unrestricted use of the Work and access to services and utilities. Include occupancy permits, operating certificates, and similar releases.
2. Submit closeout submittals specified in other Division 01 Sections, including Project Record Documents, operation and maintenance manuals, damage or settlement surveys, property surveys, and similar final record information.
3. Submit closeout submittals specified in individual Sections, including specific warranties, workmanship bonds, maintenance service agreements, final certifications, and similar documents.
4. Submit maintenance material submittals specified in individual Sections, including tools, spare parts, extra materials, and similar items, and deliver to location designated by Landscape Architect. Label with manufacturer's name and model number.

    a. Schedule of Maintenance Material Items: Prepare and submit schedule of maintenance material submittal items, including name and quantity of each item and name and number of related Specification Section. Obtain Landscape Architect's and District's signature for receipt of submittals.

5. Submit testing, adjusting, and balancing records.
6. Submit sustainable design submittals not previously submitted.
7. Submit changeover information related to District's occupancy, use, operation, and maintenance.

C. Procedures Prior to Substantial Completion: Complete the following a minimum of 10 days prior to requesting inspection for determining date of Substantial Completion. List items below that are incomplete at time of request.

1. Advise District of pending insurance changeover requirements.
2. Make final changeover of permanent locks and deliver keys to District. Advise District's personnel of changeover in security provisions.
3. Complete startup and testing of systems and equipment.
4. Perform preventive maintenance on equipment used prior to Substantial Completion.
5. Instruct District's personnel in operation, adjustment, and maintenance of products, equipment, and systems.
6. Advise District of changeover in utility services.

Copyright © 2022 by the American Institute of Architects. Warning: This AIA MasterSpec based document is protected by U.S. Copyright Law and International Treaties. A valid, current MasterSpec license is required for editing or use of this document.

7. Participate with District in conducting inspection and walkthrough with local emergency responders.
8. Terminate and remove temporary facilities from Project site, along with mockups, construction tools, and similar elements.
9. Complete final cleaning requirements.
10. Touch up paint and otherwise repair and restore marred exposed finishes to eliminate visual defects.

D. Inspection: Submit a written request for inspection to determine Substantial Completion a minimum of 10 days prior to date the Work will be completed and ready for final inspection and tests. On receipt of request, Landscape Architect and Construction Manager will either proceed with inspection or notify Contractor of unfulfilled requirements. Landscape Architect will prepare the Certificate of Substantial Completion after inspection or will notify Contractor of items, either on Contractor's list or additional items identified by Landscape Architect, that must be completed or corrected before certificate will be issued.

1. Request reinspection when the Work identified in previous inspections as incomplete is completed or corrected.
2. Results of completed inspection will form the basis of requirements for Final Completion.

1.7 FINAL COMPLETION PROCEDURES

A. Submittals Prior to Final Completion: Before requesting final inspection for determining Final Completion, complete the following:

1. Submit a final Application for Payment.
2. Certified List of Incomplete Items: Submit certified copy of Landscape Architect's Substantial Completion inspection list of items to be completed or corrected (punch list), endorsed and dated by Landscape Architect. Certified copy of the list will state that each item has been completed or otherwise resolved for acceptance.
3. Certificate of Insurance: Submit evidence of final, continuing insurance coverage complying with insurance requirements.
4. Submit pest-control final inspection report.
5. Submit Final Completion photographic documentation.

B. Inspection: Submit a written request for final inspection to determine acceptance a minimum of 10 days prior to date the Work will be completed and ready for final inspection and tests. On receipt of request, Landscape Architect and Construction Manager will either proceed with inspection or notify Contractor of unfulfilled requirements. Landscape Architect will prepare a final Certificate for Payment after inspection or will notify Contractor of construction that must be completed or corrected before certificate will be issued.

1. Request reinspection when the Work identified in previous inspections as incomplete is completed or corrected.

Copyright © 2022 by the American Institute of Architects. Warning: This AIA MasterSpec based document is protected by U.S. Copyright Law and International Treaties. A valid, current MasterSpec license is required for editing or use of this document.

1.8 LIST OF INCOMPLETE ITEMS

A. Organization of List: Include name and identification of each space and area affected by construction operations for incomplete items and items needing correction including, if necessary, areas disturbed by Contractor that are outside the limits of construction.

1. Organize list of spaces in sequential order, starting with exterior areas first, listed by room or space number.
2. Organize items applying to each space by major element, including categories for ceilings, individual walls, floors, equipment, and building systems.
3. Include the following information at the top of each page:

    a. Project name.
    b. Date.
    c. Name of Landscape Architect and Construction Manager.
    d. Name of Contractor.
    e. Page number.

4. Submit list of incomplete items in the following format:
    a. PDF Electronic File: Landscape Architect, through Construction Manager, will return annotated file.

1.9 SUBMITTAL OF PROJECT WARRANTIES

A. Time of Submittal: Submit written warranties on request of Landscape Architect for designated portions of the Work where warranties are indicated to commence on dates other than date of Substantial Completion, or when delay in submittal of warranties might limit District's rights under warranty.

B. Partial Occupancy: Submit properly executed warranties within 15 days of completion of designated portions of the Work that are completed and occupied or used by District during construction period by separate agreement with Contractor.

C. Organize warranty documents into an orderly sequence based on the table of contents of Project Manual.

D. Warranty Electronic File: Provide warranties and bonds in PDF format. Assemble complete warranty and bond submittal package into a single electronic PDF file with bookmarks enabling navigation to each item. Provide bookmarked table of contents at beginning of document.

1. Submit by email to Landscape Architect.

E. Warranties in Paper Form:

1. Bind warranties and bonds in heavy-duty, three-ring, vinyl-covered, loose-leaf binders, thickness as necessary to accommodate contents, and sized to receive 8-1/2-by-11-inch paper.
2. Provide heavy paper dividers with plastic-covered tabs for each separate warranty. Mark tab to identify the product or installation. Provide a typed description of the product or

Copyright © 2022 by the American Institute of Architects. Warning: This AIA MasterSpec based document is protected by U.S. Copyright Law and International Treaties. A valid, current MasterSpec license is required for editing or use of this document.

installation, including the name of the product and the name, address, and telephone number of Installer.

3. Identify each binder on the front and spine with the typed or printed title "WARRANTIES," Project name, and name of Contractor.

F. Provide additional copies of each warranty to include in operation and maintenance manuals.

PART 2 - PRODUCTS

2.1 MATERIALS

A. Cleaning Agents: Use cleaning materials and agents recommended by manufacturer or fabricator of the surface to be cleaned. Do not use cleaning agents that are potentially hazardous to health or property or that might damage finished surfaces.

1. Use cleaning products that comply with Green Seal's GS-37, or if GS-37 is not applicable, use products that comply with the California Code of Regulations maximum allowable VOC levels.

PART 3 - EXECUTION

3.1 FINAL CLEANING

A. General: Perform final cleaning. Conduct cleaning and waste-removal operations to comply with local laws and ordinances and Federal and local environmental and antipollution regulations.

B. Cleaning: Employ experienced workers or professional cleaners for final cleaning. Clean each surface or unit to condition expected in an average commercial building cleaning and maintenance program. Comply with manufacturer's written instructions.

1. Complete the following cleaning operations before requesting inspection for certification of Substantial Completion for entire Project or for a designated portion of Project:

a. Clean Project site of rubbish, waste material, litter, and other foreign substances.
b. Sweep paved areas broom clean. Remove petrochemical spills, stains, and other foreign deposits.
c. Rake grounds that are not planted, mulched, or paved to a smooth, even-textured surface.
d. Remove tools, construction equipment, machinery, and surplus material from Project site.
e. Clean exposed exterior and interior hard-surfaced finishes to a dirt-free condition, free of stains, films, and similar foreign substances. Avoid disturbing natural weathering of exterior surfaces. Restore reflective surfaces to their original condition.
f. Remove debris and surface dust from limited-access spaces, including roofs, plenums, shafts, trenches, equipment vaults, manholes, attics, and similar spaces.

Copyright © 2022 by the American Institute of Architects. Warning: This AIA MasterSpec based document is protected by U.S. Copyright Law and International Treaties. A valid, current MasterSpec license is required for editing or use of this document.

g. Clean flooring, removing debris, dirt, and staining; clean in accordance with manufacturer's instructions.
h. Vacuum and mop concrete.
i. Remove labels that are not permanent.
j. Wipe surfaces of mechanical and electrical equipment and similar equipment. Remove excess lubrication, paint and mortar droppings, and other foreign substances.
k. Clean plumbing fixtures to a sanitary condition, free of stains, including stains resulting from water exposure.
l. Clean luminaires, lamps, globes, and reflectors to function with full efficiency.
m. Clean strainers.
n. Leave Project clean and ready for occupancy.

C. Pest Control: Comply with pest control requirements in Section 015000 "Temporary Facilities and Controls." Prepare written report.

D. Construction Waste Disposal: Comply with waste-disposal requirements in Section 015000 "Temporary Facilities and Controls." Section 017419 "Construction Waste Management and Disposal."

3.2 CORRECTION OF THE WORK

A. Complete repair and restoration operations before requesting inspection for determination of Substantial Completion.

END OF SECTION 017700

Copyright © 2022 by the American Institute of Architects. Warning: This AIA MasterSpec based document is protected by U.S. Copyright Law and International Treaties. A valid, current MasterSpec license is required for editing or use of this document.

SECTION 017823 - OPERATION AND MAINTENANCE DATA

PART 1 - GENERAL

1.1 RELATED DOCUMENTS

A. Drawings and general provisions of the Contract, including General and Supplementary Conditions and other Division 01 Specification Sections, apply to this Section.

1.2 SUMMARY

A. Section includes administrative and procedural requirements for preparing operation and maintenance manuals, including the following:

1. Operation and maintenance documentation directory manuals.
2. Emergency manuals.
3. Systems and equipment operation manuals.
4. Systems and equipment maintenance manuals.
5. Product maintenance manuals.

B. Related Requirements:
1. 013300 "Submittal Procedures" for submitting copies of submittals for operation and maintenance manuals.

1.3 DEFINITIONS

A. System: An organized collection of parts, equipment, or subsystems united by regular interaction.

B. Subsystem: A portion of a system with characteristics similar to a system.

1.4 CLOSEOUT SUBMITTALS

A. Submit operation and maintenance manuals indicated. Provide content for each manual as specified in individual Specification Sections, and as reviewed and approved at the time of Section submittals. Submit reviewed manual content formatted and organized as required by this Section.

1. Landscape Architect and Commissioning Authority will comment on whether content of operation and maintenance submittals is acceptable.
2. Where applicable, clarify and update reviewed manual content to correspond to revisions and field conditions.

B. Format: Submit operation and maintenance manuals in the following format:

1. Submit by email to Landscape Architect. Enable reviewer comments on draft submittals.

Copyright © 2022 by the American Institute of Architects. Warning: This AIA MasterSpec based document is protected by U.S. Copyright Law and International Treaties. A valid, current MasterSpec license is required for editing or use of this document.

C. Initial Manual Submittal: Submit draft copy of each manual at least 30 days before commencing demonstration and training. Landscape Architect and Commissioning Authority will comment on whether general scope and content of manual are acceptable.

D. Final Manual Submittal: Submit each manual in final form prior to requesting inspection for Substantial Completion and at least 15 days before commencing demonstration and training. Landscape Architect will return copy with comments.

1. Correct or revise each manual to comply with Landscape Architect's and Commissioning Authority's comments. Submit copies of each corrected manual within Insert number days of receipt of Landscape Architect's and Commissioning Authority's comments and prior to commencing demonstration and training.

E. Comply with Section 017700 "Closeout Procedures" for schedule for submitting operation and maintenance documentation.

1.5 FORMAT OF OPERATION AND MAINTENANCE MANUALS

A. Manuals, Electronic Files: Submit manuals in the form of a multiple file composite electronic PDF file for each manual type required.

1. Electronic Files: Use electronic files prepared by manufacturer where available. Where scanning of paper documents is required, configure scanned file for minimum readable file size.
2. File Names and Bookmarks: Bookmark individual documents based on file names. Name document files to correspond to system, subsystem, and equipment names used in manual directory and table of contents. Group documents for each system and subsystem into individual composite bookmarked files, then create composite manual, so that resulting bookmarks reflect the system, subsystem, and equipment names in a readily navigated file tree. Configure electronic manual to display bookmark panel on opening file.

1.6 REQUIREMENTS FOR EMERGENCY, OPERATION, AND MAINTENANCE MANUALS

A. Organization of Manuals: Unless otherwise indicated, organize each manual into a separate section for each system and subsystem, and a separate section for each piece of equipment not part of a system. Each manual shall contain the following materials, in the order listed:

1. Title page.
2. Table of contents.
3. Manual contents.

B. Title Page: Include the following information:

1. Subject matter included in manual.
2. Name and address of Project.
3. Name and address of District.
4. Date of submittal.
5. Name and contact information for Contractor.
6. Name and contact information for Construction Manager.

Copyright © 2022 by the American Institute of Architects. Warning: This AIA MasterSpec based document is protected by U.S. Copyright Law and International Treaties. A valid, current MasterSpec license is required for editing or use of this document.

7. Name and contact information for Landscape Architect.
8. Name and contact information for Commissioning Authority.
9. Names and contact information for major consultants to the Landscape Architect that designed the systems contained in the manuals.
10. Cross-reference to related systems in other operation and maintenance manuals.

C. Table of Contents: List each product included in manual, identified by product name, indexed to the content of the volume, and cross-referenced to Specification Section number in Project Manual.

1. If operation or maintenance documentation requires more than one volume to accommodate data, include comprehensive table of contents for all volumes in each volume of the set.

D. Manual Contents: Organize into sets of manageable size. Arrange contents alphabetically by system, subsystem, and equipment. If possible, assemble instructions for subsystems, equipment, and components of one system into a single binder.

E. Identification: In the documentation directory and in each operation and maintenance manual, identify each system, subsystem, and piece of equipment with same designation used in the Contract Documents. If no designation exists, assign a designation according to ASHRAE Guideline 4, "Preparation of Operating and Maintenance Documentation for Building Systems."

1.7 OPERATION AND MAINTENANCE DOCUMENTATION DIRECTORY MANUAL

A. Operation and Maintenance Documentation Directory: Prepare a separate manual that provides an organized reference to emergency, operation, and maintenance manuals. List items and their location to facilitate ready access to desired information. Include the following:

1. List of Systems and Subsystems: List systems alphabetically. Include references to operation and maintenance manuals that contain information about each system.
2. List of Equipment: List equipment for each system, organized alphabetically by system. For pieces of equipment not part of system, list alphabetically in separate list.
3. Tables of Contents: Include a table of contents for each emergency, operation, and maintenance manual.

1.8 EMERGENCY MANUALS

A. Emergency Manual: Assemble a complete set of emergency information indicating procedures for use by emergency personnel and by District’s operating personnel for types of emergencies indicated.

B. Content: Organize manual into a separate section for each of the following:

1. Type of emergency.
2. Emergency instructions.
3. Emergency procedures.

Copyright © 2022 by the American Institute of Architects. Warning: This AIA MasterSpec based document is protected by U.S. Copyright Law and International Treaties. A valid, current MasterSpec license is required for editing or use of this document.

C. Type of Emergency: Where applicable for each type of emergency indicated below, include instructions and procedures for each system, subsystem, piece of equipment, and component:

1. Fire.
2. Flood.
3. Gas leak.
4. Water leak.
5. Power failure.
6. Water outage.
7. System, subsystem, or equipment failure.
8. Chemical release or spill.

D. Emergency Instructions: Describe and explain warnings, trouble indications, error messages, and similar codes and signals. Include responsibilities of District's operating personnel for notification of Installer, supplier, and manufacturer to maintain warranties.

E. Emergency Procedures: Include the following, as applicable:

1. Instructions on stopping.
2. Shutdown instructions for each type of emergency.
3. Operating instructions for conditions outside normal operating limits.
4. Required sequences for electric or electronic systems.
5. Special operating instructions and procedures.

1.9 SYSTEMS AND EQUIPMENT OPERATION MANUALS

A. Systems and Equipment Operation Manual: Assemble a complete set of data indicating operation of each system, subsystem, and piece of equipment not part of a system. Include information required for daily operation and management, operating standards, and routine and special operating procedures.

1. Engage a factory-authorized service representative to assemble and prepare information for each system, subsystem, and piece of equipment not part of a system.
2. Prepare a separate manual for each system and subsystem, in the form of an instructional manual for use by District's operating personnel.

B. Content: In addition to requirements in this Section, include operation data required in individual Specification Sections and the following information:

1. System, subsystem, and equipment descriptions. Use designations for systems and equipment indicated on Contract Documents.
2. Performance and design criteria if Contractor has delegated design responsibility.
3. Operating standards.
4. Operating procedures.
5. Operating logs.
6. Wiring diagrams.
7. Control diagrams.
8. Piped system diagrams.
9. Precautions against improper use.
10. License requirements including inspection and renewal dates.

Copyright © 2022 by the American Institute of Architects. Warning: This AIA MasterSpec based document is protected by U.S. Copyright Law and International Treaties. A valid, current MasterSpec license is required for editing or use of this document.

C. Descriptions: Include the following:

1. Product name and model number. Use designations for products indicated on Contract Documents.
2. Manufacturer's name.
3. Equipment identification with serial number of each component.
4. Equipment function.
5. Operating characteristics.
6. Limiting conditions.
7. Performance curves.
8. Engineering data and tests.
9. Complete nomenclature and number of replacement parts.

D. Operating Procedures: Include the following, as applicable:

1. Startup procedures.
2. Equipment or system break-in procedures.
3. Routine and normal operating instructions.
4. Regulation and control procedures.
5. Instructions on stopping.
6. Normal shutdown instructions.
7. Seasonal and weekend operating instructions.
8. Required sequences for electric or electronic systems.
9. Special operating instructions and procedures.

E. Systems and Equipment Controls: Describe the sequence of operation, and diagram controls as installed.

F. Piped Systems: Diagram piping as installed, and identify color coding where required for identification.

1.10 SYSTEMS AND EQUIPMENT MAINTENANCE MANUALS

A. Systems and Equipment Maintenance Manuals: Assemble a complete set of data indicating maintenance of each system, subsystem, and piece of equipment not part of a system. Include manufacturers' maintenance documentation, preventive maintenance procedures and frequency, repair procedures, wiring and systems diagrams, lists of spare parts, and warranty information.

1. Engage a factory-authorized service representative to assemble and prepare information for each system, subsystem, and piece of equipment not part of a system.
2. Prepare a separate manual for each system and subsystem, in the form of an instructional manual for use by District's operating personnel.

B. Content: For each system, subsystem, and piece of equipment not part of a system, include source information, manufacturers' maintenance documentation, maintenance procedures, maintenance and service schedules, spare parts list and source information, maintenance service contracts, and warranties and bonds as described below.

C. Source Information: List each system, subsystem, and piece of equipment included in manual, identified by product name and arranged to match manual's table of contents. For each product,

Copyright © 2022 by the American Institute of Architects. Warning: This AIA MasterSpec based document is protected by U.S. Copyright Law and International Treaties. A valid, current MasterSpec license is required for editing or use of this document.

list name, address, and telephone number of Installer or supplier and maintenance service agent, and cross-reference Specification Section number and title in Project Manual and drawing or schedule designation or identifier where applicable.

D. Manufacturers' Maintenance Documentation: Include the following information for each component part or piece of equipment:

1. Standard maintenance instructions and bulletins; include only sheets pertinent to product or component installed. Mark each sheet to identify each product or component incorporated into the Work. If data include more than one item in a tabular format, identify each item using appropriate references from the Contract Documents. Identify data applicable to the Work and delete references to information not applicable.

    a. Prepare supplementary text if manufacturers' standard printed data are not available and where the information is necessary for proper operation and maintenance of equipment or systems.

2. Drawings, diagrams, and instructions required for maintenance, including disassembly and component removal, replacement, and assembly.
3. Identification and nomenclature of parts and components.
4. List of items recommended to be stocked as spare parts.

E. Maintenance Procedures: Include the following information and items that detail essential maintenance procedures:

1. Test and inspection instructions.
2. Troubleshooting guide.
3. Precautions against improper maintenance.
4. Disassembly; component removal, repair, and replacement; and reassembly instructions.
5. Aligning, adjusting, and checking instructions.
6. Demonstration and training video recording, if available.

F. Maintenance and Service Schedules: Include service and lubrication requirements, list of required lubricants for equipment, and separate schedules for preventive and routine maintenance and service with standard time allotment.

1. Scheduled Maintenance and Service: Tabulate actions for daily, weekly, monthly, quarterly, semiannual, and annual frequencies.
2. Maintenance and Service Record: Include manufacturers' forms for recording maintenance.

G. Spare Parts List and Source Information: Include lists of replacement and repair parts, with parts identified and cross-referenced to manufacturers' maintenance documentation and local sources of maintenance materials and related services.

H. Maintenance Service Contracts: Include copies of maintenance agreements with name and telephone number of service agent.

I. Warranties and Bonds: Include copies of warranties and bonds and lists of circumstances and conditions that would affect validity of warranties or bonds.

Copyright © 2022 by the American Institute of Architects. Warning: This AIA MasterSpec based document is protected by U.S. Copyright Law and International Treaties. A valid, current MasterSpec license is required for editing or use of this document.

1. Include procedures to follow and required notifications for warranty claims.

J. Drawings: Prepare drawings supplementing manufacturers' printed data to illustrate the relationship of component parts of equipment and systems and to illustrate control sequence and flow diagrams. Coordinate these drawings with information contained in record Drawings to ensure correct illustration of completed installation.

1. Do not use original project record documents as part of maintenance manuals.

1.11 PRODUCT MAINTENANCE MANUALS

A. Product Maintenance Manual: Assemble a complete set of maintenance data indicating care and maintenance of each product, material, and finish incorporated into the Work.

B. Content: Organize manual into a separate section for each product, material, and finish. Include source information, product information, maintenance procedures, repair materials and sources, and warranties and bonds, as described below.

C. Source Information: List each product included in manual, identified by product name and arranged to match manual's table of contents. For each product, list name, address, and telephone number of Installer or supplier and maintenance service agent, and cross-reference Specification Section number and title in Project Manual and drawing or schedule designation or identifier where applicable.

D. Product Information: Include the following, as applicable:

1. Product name and model number.
2. Manufacturer's name.
3. Color, pattern, and texture.
4. Material and chemical composition.
5. Reordering information for specially manufactured products.

E. Maintenance Procedures: Include manufacturer's written recommendations and the following:

1. Inspection procedures.
2. Types of cleaning agents to be used and methods of cleaning.
3. List of cleaning agents and methods of cleaning detrimental to product.
4. Schedule for routine cleaning and maintenance.
5. Repair instructions.

F. Repair Materials and Sources: Include lists of materials and local sources of materials and related services.

G. Warranties and Bonds: Include copies of warranties and bonds and lists of circumstances and conditions that would affect validity of warranties or bonds.

1. Include procedures to follow and required notifications for warranty claims.

Copyright © 2022 by the American Institute of Architects. Warning: This AIA MasterSpec based document is protected by U.S. Copyright Law and International Treaties. A valid, current MasterSpec license is required for editing or use of this document.

PART 2 - PRODUCTS (Not Used)

PART 3 - EXECUTION (Not Used)

END OF SECTION 017823

Copyright © 2022 by the American Institute of Architects. Warning: This AIA MasterSpec based document is protected by U.S. Copyright Law and International Treaties. A valid, current MasterSpec license is required for editing or use of this document.

SECTION 017839 - PROJECT RECORD DOCUMENTS

PART 1 - GENERAL

1.1 RELATED DOCUMENTS

A. Drawings and general provisions of the Contract, including General and Supplementary Conditions and other Division 01 Specification Sections, apply to this Section.

1.2 SUMMARY

A. Section includes administrative and procedural requirements for Project Record Documents, including the following:

1. Record Drawings.
2. Record specifications.
3. Record Product Data.
4. Miscellaneous record submittals.

B. Related Requirements:

1. Section 017700 "Closeout Procedures" for general closeout procedures.
2. Section 017823 "Operation and Maintenance Data" for operation and maintenance manual requirements.

1.3 CLOSEOUT SUBMITTALS

A. Record Drawings: Comply with the following:

1. Number of Copies: Submit one set(s) of marked-up record prints.
2. Number of Copies: Submit copies of Record Drawings as follows:

a. Initial Submittal:

1) Submit PDF electronic files of scanned record prints and one set(s) of file prints.
2) Landscape Architect will indicate whether general scope of changes, additional information recorded, and quality of drafting are acceptable.

b. Final Submittal:

1) Submit three paper-copy set(s) of marked-up record prints.
2) Submit PDF electronic files of scanned Record Prints and three set(s) of file prints.
3) Print each drawing, whether or not changes and additional information were recorded.

Copyright © 2022 by the American Institute of Architects. Warning: This AIA MasterSpec based document is protected by U.S. Copyright Law and International Treaties. A valid, current MasterSpec license is required for editing or use of this document.

c. Final Submittal:

1) Submit Record Digital Data Files and set(s) of Record Digital Data File plots.
2) Plot each drawing file, whether or not changes and additional information were recorded.

B. Record Specifications: Submit annotated PDF electronic files of Project's Specifications, including addenda and Contract modifications.

C. Record Product Data: Submit annotated PDF electronic files and directories of each submittal.

1. Where record Product Data are required as part of operation and maintenance manuals, submit duplicate marked-up Product Data as a component of manual.

D. Miscellaneous Record Submittals: See other Specification Sections for miscellaneous record-keeping requirements and submittals in connection with various construction activities. Submit annotated PDF electronic files and directories of each submittal.

E. Reports: Submit written report weekly indicating items incorporated into Project Record Documents concurrent with progress of the Work, including revisions, concealed conditions, field changes, product selections, and other notations incorporated.

1.4 RECORD DRAWINGS

A. Record Prints: Maintain one set of marked-up paper copies of the Contract Drawings and Shop Drawings, incorporating new and revised drawings as modifications are issued.

1. Preparation: Mark record prints to show the actual installation, where installation varies from that shown originally. Require individual or entity who obtained record data, whether individual or entity is Installer, subcontractor, or similar entity, to provide information for preparation of corresponding marked-up record prints.

a. Give particular attention to information on concealed elements that would be difficult to identify or measure and record later.
b. Accurately record information in an acceptable drawing technique.
c. Record data as soon as possible after obtaining it.
d. Record and check the markup before enclosing concealed installations.
e. Cross-reference record prints to corresponding photographic documentation.

2. Content: Types of items requiring marking include, but are not limited to, the following:

a. Dimensional changes to Drawings.
b. Revisions to details shown on Drawings.
c. Depths of foundations.
d. Locations and depths of underground utilities.
e. Revisions to routing of piping and conduits.
f. Revisions to electrical circuitry.
g. Actual equipment locations.
h. Locations of concealed internal utilities.

Copyright © 2022 by the American Institute of Architects. Warning: This AIA MasterSpec based document is protected by U.S. Copyright Law and International Treaties. A valid, current MasterSpec license is required for editing or use of this document.

i. Changes made by Change Order or Construction Change Directive.
j. Changes made following Landscape Architect's written orders.
k. Details not on the original Contract Drawings.
l. Field records for variable and concealed conditions.
m. Record information on the Work that is shown only schematically.

3. Mark the Contract Drawings and Shop Drawings completely and accurately. Use personnel proficient at recording graphic information in production of marked-up record prints.
4. Mark record prints with erasable, red-colored pencil. Use other colors to distinguish between changes for different categories of the Work at same location.
5. Mark important additional information that was either shown schematically or omitted from original Drawings.
6. Note Construction Change Directive numbers, alternate numbers, Change Order numbers, and similar identification, where applicable.

B. Record Digital Data Files: Immediately before inspection for Certificate of Substantial Completion, review marked-up record prints with Landscape Architect and Construction Manager. When authorized, prepare a full set of corrected digital data files of the Contract Drawings, as follows:

1. Format: Annotated PDF electronic file with comment function enabled.
2. Incorporate changes and additional information previously marked on record prints. Delete, redraw, and add details and notations where applicable.
3. Refer instances of uncertainty to Landscape Architect through Construction Manager for resolution.
4. Landscape Architect will furnish Contractor with one set of digital data files of the Contract Drawings for use in recording information.

a. See Section 013100 "Project Management and Coordination" for requirements related to use of Landscape Architect's digital data files.
b. Landscape Architect will provide data file layer information. Record markups in separate layers.

C. Format: Identify and date each Record Drawing; include the designation "PROJECT RECORD DRAWING" in a prominent location.

1. Record Prints: Organize record prints into manageable sets. Bind each set with durable paper cover sheets. Include identification on cover sheets.
2. Format: Annotated PDF electronic file with comment function enabled.
3. Record Digital Data Files: Organize digital data information into separate electronic files that correspond to each sheet of the Contract Drawings. Name each file with the sheet identification. Include identification in each digital data file.
4. Identification: As follows:

a. Project name.
b. Date.
c. Designation "PROJECT RECORD DRAWINGS."
d. Name of Landscape Architect and Construction Manager.
e. Name of Contractor.

Copyright © 2022 by the American Institute of Architects. Warning: This AIA MasterSpec based document is protected by U.S. Copyright Law and International Treaties. A valid, current MasterSpec license is required for editing or use of this document.

1.5 RECORD SPECIFICATIONS

A. Preparation: Mark Specifications to indicate the actual product installation, where installation varies from that indicated in Specifications, addenda, and Contract modifications.

1. Give particular attention to information on concealed products and installations that cannot be readily identified and recorded later.
2. Mark copy with the proprietary name and model number of products, materials, and equipment furnished, including substitutions and product options selected.
3. Record the name of manufacturer, supplier, Installer, and other information necessary to provide a record of selections made.
4. For each principal product, indicate whether Record Product Data has been submitted in operation and maintenance manuals instead of submitted as Record Product Data.
5. Note related Change Orders, Record Product Data, and Record Drawings where applicable.

B. Format: Submit record specifications as annotated PDF electronic file.

1.6 RECORD PRODUCT DATA

A. Recording: Maintain one copy of each submittal during the construction period for Project Record Document purposes. Post changes and revisions to Project Record Documents as they occur; do not wait until end of Project.

B. Preparation: Mark Product Data to indicate the actual product installation where installation varies substantially from that indicated in Product Data submittal.

1. Give particular attention to information on concealed products and installations that cannot be readily identified and recorded later.
2. Include significant changes in the product delivered to Project site and changes in manufacturer's written instructions for installation.
3. Note related Change Orders, Record Specifications, and Record Drawings where applicable.

C. Format: Submit Record Product Data as annotated PDF electronic file.

1. Include Record Product Data directory organized by Specification Section number and title, electronically linked to each item of Record Product Data.

1.7 MISCELLANEOUS RECORD SUBMITTALS

A. Assemble miscellaneous records required by other Specification Sections for miscellaneous record keeping and submittal in connection with actual performance of the Work. Bind or file miscellaneous records and identify each, ready for continued use and reference.

B. Format: Submit miscellaneous record submittals as PDF electronic file.

1. Include miscellaneous record submittals directory organized by Specification Section number and title, electronically linked to each item of miscellaneous record submittals.

Copyright © 2022 by the American Institute of Architects. Warning: This AIA MasterSpec based document is protected by U.S. Copyright Law and International Treaties. A valid, current MasterSpec license is required for editing or use of this document.

1.8 MAINTENANCE OF RECORD DOCUMENTS

A. Maintenance of Record Documents: Store Record Documents in the field office apart from the Contract Documents used for construction. Do not use Project Record Documents for construction purposes. Maintain Record Documents in good order and in a clean, dry, legible condition, protected from deterioration and loss. Provide access to Project Record Documents for Landscape Architect's and Construction Manager's reference during normal working hours.

PART 2 - PRODUCTS (Not Used)

PART 3 - EXECUTION (Not Used)

END OF SECTION 017839

Copyright © 2022 by the American Institute of Architects. Warning: This AIA MasterSpec based document is protected by U.S. Copyright Law and International Treaties. A valid, current MasterSpec license is required for editing or use of this document.

SECTION 024119 - SELECTIVE DEMOLITION

PART 1 - GENERAL

1.1 SUMMARY

A. Section Includes:

1. Demolition and removal of selected site elements.
2. Salvage of existing items to be reused or recycled.

B. Related Requirements:

1. Section 011000 "Summary" for restrictions on use of the premises, Owner-occupancy requirements, and phasing requirements.
2. Section 015639 "Temporary Tree and Plant Protection" for temporary protection of existing trees and plants that are affected by selective demolition.
3. Section 311000 "Site Clearing" for site clearing and removal of above- and below-grade improvements not part of selective demolition.

1.2 DEFINITIONS

A. Remove: Detach items from existing construction and dispose of them off-site unless indicated to be salvaged or reinstalled.

B. Remove and Salvage: Detach items from existing construction, in a manner to prevent damage, and deliver to District ready for reuse.

C. Remove and Reinstall: Detach items from existing construction, in a manner to prevent damage, prepare for reuse, and reinstall where indicated.

D. Existing to Remain: Leave existing items that are not to be removed and that are not otherwise indicated to be salvaged or reinstalled.

E. Dismantle: To remove by disassembling or detaching an item from a surface, using gentle methods and equipment to prevent damage to the item and surfaces; disposing of items unless indicated to be salvaged or reinstalled.

1.3 MATERIALS OWNERSHIP

A. Unless otherwise indicated, demolition waste becomes property of Contractor.

B. Historic items, relics, antiques, and similar objects including, but not limited to, cornerstones and their contents, commemorative plaques and tablets, and other items of interest or value to District that may be uncovered during demolition remain the property of District.

1. Carefully salvage in a manner to prevent damage and promptly return to District.

Copyright © 2022 by the American Institute of Architects. Warning: This AIA MasterSpec based document is protected by U.S. Copyright Law and International Treaties. A valid, current MasterSpec license is required for editing or use of this document.

1.4 PREINSTALLATION MEETINGS

A. Predemolition Conference: Conduct conference at Project site.

1. Inspect and discuss condition of construction to be selectively demolished.
2. Review structural load limitations of existing structure.
3. Review and finalize selective demolition schedule and verify availability of materials, demolition personnel, equipment, and facilities needed to make progress and avoid delays.
4. Review requirements of work performed by other trades that rely on substrates exposed by selective demolition operations.
5. Review areas where existing construction is to remain and requires protection.

1.5 INFORMATIONAL SUBMITTALS

A. Qualification Data: For refrigerant recovery technician.

B. Engineering Survey: Submit engineering survey of condition of building.

C. Proposed Protection Measures: Submit report, including Drawings, that indicates the measures proposed for protecting individuals and property, for environmental protection and, for noise control. Indicate proposed locations and construction of barriers.

D. Schedule of Selective Demolition Activities: Indicate the following:

1. Detailed sequence of selective demolition and removal work, with starting and ending dates for each activity. Ensure District's on-site operations are uninterrupted.
2. Interruption of utility services. Indicate how long utility services will be interrupted.
3. Coordination for shutoff, capping, and continuation of utility services.
4. Use of elevator and stairs.
5. Coordination of District's continuing occupancy of portions of existing building and of District's partial occupancy of completed Work.

E. Predemolition Photographs or Video: Show existing conditions of adjoining construction, including finish surfaces, that might be misconstrued as damage caused by salvage and demolition operations.

F. Warranties: Documentation indicating that existing warranties are still in effect after completion of selective demolition.

1.6 CLOSEOUT SUBMITTALS

A. Inventory: Submit a list of items that have been removed and salvaged.

Copyright © 2022 by the American Institute of Architects. Warning: This AIA MasterSpec based document is protected by U.S. Copyright Law and International Treaties. A valid, current MasterSpec license is required for editing or use of this document.

1.7 QUALITY ASSURANCE

1.8 FIELD CONDITIONS

A. Conditions existing at time of inspection for bidding purpose will be maintained by District as far as practical.

B. Notify Landscape Architect of discrepancies between existing conditions and Drawings before proceeding with selective demolition.

C. Hazardous Materials: It is not expected that hazardous materials will be encountered in the Work.

1. Hazardous materials will be removed by District before start of the Work.
2. If suspected hazardous materials are encountered, do not disturb; immediately notify Landscape Architect and District. Hazardous materials will be removed by District under a separate contract.

D. Storage or sale of removed items or materials on-site is not permitted.

E. Utility Service: Maintain existing utilities indicated to remain in service and protect them against damage during selective demolition operations.

1. Maintain fire-protection facilities in service during selective demolition operations.

1.9 WARRANTY

A. Existing Warranties: Remove, replace, patch, and repair materials and surfaces cut or damaged during selective demolition, by methods and with materials and using approved contractors so as not to void existing warranties. Notify warrantor before proceeding. Existing warranties include the following:

B. Notify warrantor on completion of selective demolition, and obtain documentation verifying that existing system has been inspected and warranty remains in effect. Submit documentation at Project closeout.

1.10 COORDINATION

A. Arrange selective demolition schedule so as not to interfere with District's operations.

PART 2 - PRODUCTS

2.1 PERFORMANCE REQUIREMENTS

A. Regulatory Requirements: Comply with governing EPA notification regulations before beginning selective demolition. Comply with hauling and disposal regulations of authorities having jurisdiction.

Copyright © 2022 by the American Institute of Architects. Warning: This AIA MasterSpec based document is protected by U.S. Copyright Law and International Treaties. A valid, current MasterSpec license is required for editing or use of this document.

B. Standards: Comply with ANSI/ASSP A10.6 and NFPA 241.

PART 3 - EXECUTION

3.1 EXAMINATION

A. Verify that utilities have been disconnected and capped before starting selective demolition operations.

B. Review Project Record Documents of existing construction or other existing condition and hazardous material information provided by District. District does not guarantee that existing conditions are same as those indicated in Project Record Documents.

C. Perform an engineering survey of condition of building to determine whether removing any element might result in structural deficiency or unplanned collapse of any portion of structure or adjacent structures during selective building demolition operations.

1. Perform surveys as the Work progresses to detect hazards resulting from selective demolition activities.

D. Steel Tendons: Locate tensioned steel tendons and include recommendations for de-tensioning.

E. Verify that hazardous materials have been remediated before proceeding with building demolition operations.

F. Survey of Existing Conditions: Record existing conditions by use of measured drawings preconstruction photographs or video.

1. Inventory and record the condition of items to be removed and salvaged.
2. Before selective demolition or removal of existing building elements that will be reproduced or duplicated in final Work, make permanent record of measurements, materials, and construction details required to make exact reproduction.

3.2 UTILITY SERVICES AND MECHANICAL/ELECTRICAL SYSTEMS

A. Existing Services/Systems to Remain: Maintain services/systems indicated to remain and protect them against damage.

B. Existing Services/Systems to Be Removed, Relocated, or Abandoned: Locate, identify, disconnect, and seal or cap off utility services and mechanical/electrical systems serving areas to be selectively demolished.

1. District will arrange to shut off indicated services/systems when requested by Contractor.
2. Arrange to shut off utilities with utility companies.
3. If services/systems are required to be removed, relocated, or abandoned, provide temporary services/systems that bypass area of selective demolition and that maintain continuity of services/systems to other parts of building.

Copyright © 2022 by the American Institute of Architects. Warning: This AIA MasterSpec based document is protected by U.S. Copyright Law and International Treaties. A valid, current MasterSpec license is required for editing or use of this document.

3.3 PROTECTION

A. Temporary Protection: Provide temporary barricades and other protection required to prevent injury to people and damage to adjacent buildings and facilities to remain.

1. Provide protection to ensure safe passage of people around selective demolition area and to and from occupied portions of building.
2. Provide temporary weather protection, during interval between selective demolition of existing construction on exterior surfaces and new construction, to prevent water leakage and damage to structure and interior areas.
3. Cover and protect furniture, furnishings, and equipment that have not been removed.
4. Comply with requirements for temporary enclosures, dust control, heating, and cooling specified in Section 015000 "Temporary Facilities and Controls."

B. Temporary Shoring: Design, provide, and maintain shoring, bracing, and structural supports as required to preserve stability and prevent movement, settlement, or collapse of construction and finishes to remain, and to prevent unexpected or uncontrolled movement or collapse of construction being demolished.

1. Strengthen or add new supports when required during progress of selective demolition.

C. Remove temporary barricades and protections where hazards no longer exist.

3.4 SELECTIVE DEMOLITION, GENERAL

A. General: Demolish and remove existing construction only to the extent required by new construction and as indicated. Use methods required to complete the Work within limitations of governing regulations and as follows:

1. Neatly cut openings and holes plumb, square, and true to dimensions required. Use cutting methods least likely to damage construction to remain or adjoining construction. Use hand tools or small power tools designed for sawing or grinding, not hammering and chopping. Temporarily cover openings to remain.
2. Cut or drill from the exposed or finished side into concealed surfaces to avoid marring existing finished surfaces.
3. Do not use cutting torches until work area is cleared of flammable materials. At concealed spaces, such as duct and pipe interiors, verify condition and contents of hidden space before starting flame-cutting operations. Maintain portable fire-suppression devices during flame-cutting operations.
4. Maintain fire watch during and for at least one hour after flame-cutting operations.
5. Maintain adequate ventilation when using cutting torches.
6. Remove decayed, vermin-infested, or otherwise dangerous or unsuitable materials and promptly dispose of off-site.
7. Remove structural framing members and lower to ground by method suitable to avoid free fall and to prevent ground impact or dust generation.
8. Locate selective demolition equipment and remove debris and materials so as not to impose excessive loads on supporting walls, floors, or framing.
9. Dispose of demolished items and materials promptly. Comply with requirements in Section 017419 "Construction Waste Management and Disposal."

Copyright © 2022 by the American Institute of Architects. Warning: This AIA MasterSpec based document is protected by U.S. Copyright Law and International Treaties. A valid, current MasterSpec license is required for editing or use of this document.

B. Site Access and Temporary Controls: Conduct selective demolition and debris-removal operations to ensure minimum interference with roads, streets, walks, walkways, and other adjacent occupied and used facilities.

C. Removed and Salvaged Items:

1. Clean salvaged items.
2. Pack or crate items after cleaning. Identify contents of containers.
3. Store items in a secure area until delivery to District.
4. Transport items to District's storage area off-site designated by District.
5. Protect items from damage during transport and storage.

D. Removed and Reinstalled Items:

1. Clean and repair items to functional condition adequate for intended reuse.
2. Pack or crate items after cleaning and repairing. Identify contents of containers.
3. Protect items from damage during transport and storage.
4. Reinstall items in locations indicated. Comply with installation requirements for new materials and equipment. Provide connections, supports, and miscellaneous materials necessary to make item functional for use indicated.

E. Existing Items to Remain: Protect construction indicated to remain against damage and soiling during selective demolition. When permitted by Landscape Architect, items may be removed to a suitable, protected storage location during selective demolition and cleaned and reinstalled in their original locations after selective demolition operations are complete.

3.5 SELECTIVE DEMOLITION PROCEDURES FOR SPECIFIC MATERIALS

A. Concrete: Demolish in small sections. Using power-driven saw, cut concrete to a depth of at least 3/4 inch at junctures with construction to remain. Dislodge concrete from reinforcement at perimeter of areas being demolished, cut reinforcement, and then remove remainder of concrete. Neatly trim openings to dimensions indicated.

3.6 DISPOSAL OF DEMOLISHED MATERIALS

A. Remove demolition waste materials from Project site and dispose of them in an EPA-approved construction and demolition waste landfill acceptable to authorities having jurisdiction. and recycle or dispose of them according to Section 017419 "Construction Waste Management and Disposal."

1. Do not allow demolished materials to accumulate on-site.
2. Remove and transport debris in a manner that will prevent spillage on adjacent surfaces and areas.
3. Remove debris from elevated portions of building by chute, hoist, or other device that will convey debris to grade level in a controlled descent.
4. Comply with requirements specified in Section 017419 "Construction Waste Management and Disposal."

B. Burning: Do not burn demolished materials.

Copyright © 2022 by the American Institute of Architects. Warning: This AIA MasterSpec based document is protected by U.S. Copyright Law and International Treaties. A valid, current MasterSpec license is required for editing or use of this document.

3.7 CLEANING

A. Clean adjacent structures and improvements of dust, dirt, and debris caused by selective demolition operations. Return adjacent areas to condition existing before selective demolition operations began.

END OF SECTION 024119

Copyright © 2022 by the American Institute of Architects. Warning: This AIA MasterSpec based document is protected by U.S. Copyright Law and International Treaties. A valid, current MasterSpec license is required for editing or use of this document.

SECTION 033000 - CAST-IN-PLACE CONCRETE

PART 1 - GENERAL

1.1 SUMMARY

A. Section Includes:

1. Cast-in-place concrete, including concrete materials, mixture design, placement procedures, and finishes.

B. Related Requirements:
1. Section 032000 “Concrete Reinforcing” for reinforcement requirements for cast-in-place concrete.
2. Section 321313 "Concrete Paving" for concrete pavement and walks.

1.2 DEFINITIONS

A. Cementitious Materials: Portland cement alone or in combination with one or more of the following: blended hydraulic cement, fly ash, slag cement, other pozzolans, and silica fume; materials subject to compliance with requirements.

B. Water/Cement Ratio (w/cm): The ratio by weight of water to cementitious materials.

1.3 PREINSTALLATION MEETINGS

A. Preinstallation Conference: Conduct conference at Project site.

1. Require representatives of each entity directly concerned with cast-in-place concrete to attend, including the following:

a. Contractor's superintendent.
b. Independent testing agency responsible for concrete design mixtures.
c. Ready-mix concrete manufacturer.
d. Concrete Subcontractor.
e. Special concrete finish Subcontractor.

2. Review the following:

a. Special inspection and testing and inspecting agency procedures for field quality control.
b. Construction joints, control joints, isolation joints, and joint-filler strips.
c. Anchor rod and anchorage device installation tolerances.
d. Cold and hot weather concreting procedures.
e. Concrete finishes and finishing.
f. Curing procedures.
g. Forms and form-removal limitations.

Copyright © 2022 by the American Institute of Landscape Architects. Warning: This AIA MasterSpec based document is protected by U.S. Copyright Law and International Treaties. A valid, current MasterSpec license is required for editing or use of this document.

h. Methods for achieving specified slab flatness and levelness.
i. Concrete repair procedures.
j. Concrete protection.
k. Initial curing and field curing of field test cylinders (ASTM C31/C31M.)
l. Protection of field cured field test cylinders.

1.4 ACTION SUBMITTALS

A. Product Data: For each of the following.

1. Portland cement.
2. Fly ash.
3. Slag cement.
4. Blended hydraulic cement.
5. Silica fume.
6. Performance-based hydraulic cement
7. Aggregates.
8. Admixtures:

   a. Include limitations of use, including restrictions on cementitious materials, supplementary cementitious materials, air entrainment, aggregates, temperature at time of concrete placement, relative humidity at time of concrete placement, curing conditions, and use of other admixtures.

9. Color pigments.
10. Curing materials.
    a. Include documentation from color pigment manufacturer, indicating that proposed methods of curing are recommended by color pigment manufacturer.

11. Joint fillers.
12. Repair materials.

B. Design Mixtures: For each concrete mixture, include the following:

1. Mixture identification.
2. Minimum 28-day compressive strength.
3. Durability exposure class.
4. Maximum w/cm.
5. Slump limit.
6. Air content.
7. Nominal maximum aggregate size.
8. Synthetic micro-fiber content.
9. Indicate amounts of mixing water to be withheld for later addition at Project site if permitted.
10. Intended placement method.
11. Submit alternate design mixtures when characteristics of materials, Project conditions, weather, test results, or other circumstances warrant adjustments.

C. Shop Drawings:

Copyright © 2022 by the American Institute of Landscape Architects. Warning: This AIA MasterSpec based document is protected by U.S. Copyright Law and International Treaties. A valid, current MasterSpec license is required for editing or use of this document.

1. Construction Joint Layout: Indicate proposed construction joints required to construct the structure, if different that those shown in the drawings.

    a. Location of construction joints is subject to approval of the Landscape Architect.

D. Samples: For manufacturer's standard colors for color pigment.

E. Concrete Schedule: For each location of each Class of concrete indicated in "Concrete Mixtures" Article, including the following:

1. Concrete Class designation.
2. Location within Project.
3. Exposure Class designation.
4. Formed Surface Finish designation and final finish.
5. Curing process.

1.5 INFORMATIONAL SUBMITTALS

A. Qualification Data: For the following:

1. Installer: Include copies of applicable ACI certificates.
2. Ready-mixed concrete manufacturer.
3. Testing agency: Include copies of applicable ACI certificates.

B. Material Certificates: For each of the following, signed by manufacturers:

1. Cementitious materials.
2. Admixtures.
3. Curing compounds.
4. Bonding agents.
5. Adhesives.
6. Semirigid joint filler.
7. Joint-filler strips.
8. Repair materials.

C. Material Test Reports: For the following, from a qualified testing agency:

1. Portland cement.
2. Fly ash.
3. Slag cement.
4. Blended hydraulic cement.
5. Silica fume.
6. Performance-based hydraulic cement.
7. Aggregates.
8. Admixtures.

D. Research Reports:

1. For concrete admixtures in accordance with ICC's Acceptance Criteria AC198.

Copyright © 2022 by the American Institute of Landscape Architects. Warning: This AIA MasterSpec based document is protected by U.S. Copyright Law and International Treaties. A valid, current MasterSpec license is required for editing or use of this document.

E. Preconstruction Test Reports: For each mix design.

F. Field quality-control reports.

G. Minutes of preinstallation conference.

1.6 QUALITY ASSURANCE

A. Installer Qualifications: A qualified installer who employs Project personnel qualified as an ACI-certified Flatwork Technician and Finisher and a supervisor who is a certified ACI Flatwork Concrete Finisher/Technician or an ACI Concrete Flatwork Technician with experience installing and finishing formed architectural site concrete.

1. Post-Installed Concrete Anchors Installers: ACI-certified Adhesive Anchor Installer.

B. Ready-Mixed Concrete Manufacturer Qualifications: A firm experienced in manufacturing ready-mixed concrete products and that complies with ASTM C94/C94M requirements for production facilities and equipment.

1. Manufacturer certified in accordance with NRMCA's "Certification of Ready Mixed Concrete Production Facilities."

C. Laboratory Testing Agency Qualifications: A testing agency qualified in accordance with ASTM C1077 and ASTM E329 for testing indicated and employing an ACI-certified Concrete Quality Control Technical Manager.

1. Personnel performing laboratory tests to be an ACI-certified Concrete Strength Testing Technician and Concrete Laboratory Testing Technician, Grade I. Testing agency laboratory supervisor to be an ACI-certified Concrete Laboratory Testing Technician, Grade II.

D. Field Quality-Control Testing Agency Qualifications: An independent agency, acceptable to authorities having jurisdiction, qualified in accordance with ASTM C1077 and ASTM E329 for testing indicated.

1. Personnel conducting field tests to be qualified as an ACI Concrete Field Testing Technician, Grade 1, in accordance with ACI CPP 610.1 or an equivalent certification program.

E. Mockups: Cast concrete pilasters, concrete seatwalls, and other cast-in-place concrete elements as indicated on Drawings to demonstrate typical joints, surface finish, texture, tolerances, and standard of workmanship.

1. Subject to compliance with requirements, approved mockups may become part of the completed Work if undisturbed at time of Substantial Completion.

1.7 PRECONSTRUCTION TESTING

A. Preconstruction Testing Service: Engage a qualified testing agency to perform preconstruction testing on each concrete mixture.

Copyright © 2022 by the American Institute of Landscape Architects. Warning: This AIA MasterSpec based document is protected by U.S. Copyright Law and International Treaties. A valid, current MasterSpec license is required for editing or use of this document.

1. Include the following information in each test report:

    a. Admixture dosage rates.
    b. Slump.
    c. Air content.
    d. Seven-day compressive strength.
    e. 28-day compressive strength.

1.8 DELIVERY, STORAGE, AND HANDLING

A. Comply with ASTM C94/C94M and ACI 301.

1.9 FIELD CONDITIONS

A. Cold-Weather Placement: Comply with ACI 301 and ACI 306.1 and as follows.

1. Protect concrete work from physical damage or reduced strength that could be caused by frost, freezing actions, or low temperatures.
2. When average high and low temperature is expected to fall below 40 deg F for three successive days, maintain delivered concrete mixture temperature within the temperature range required by ACI 301.
3. Do not use frozen materials or materials containing ice or snow.
4. Do not place concrete in contact with surfaces less than 35 deg F, other than reinforcing steel.
5. Do not use calcium chloride, salt, or other materials containing antifreeze agents or chemical accelerators unless otherwise specified and approved in mixture designs.

B. Hot-Weather Placement: Comply with ACI 301 and ACI 305.1, and as follows:

1. Do not install concrete when air temperature exceeds 90 degrees.
2. Fog-spray forms, steel reinforcement, and subgrade just before placing concrete. Keep subgrade uniformly moist without standing water, soft spots, or dry areas.

1.10 WARRANTY

A. The Contractor shall warrant all cast-in-place concrete work furnished under this Contract against defects in materials, workmanship, and installation for a period of one (1) year from the date of Final Acceptance by the District.

PART 2 - PRODUCTS

2.1 CONCRETE, GENERAL

A. ACI Publications: Comply with ACI 301 unless modified by requirements in the Contract Documents.

Copyright © 2022 by the American Institute of Landscape Architects. Warning: This AIA MasterSpec based document is protected by U.S. Copyright Law and International Treaties. A valid, current MasterSpec license is required for editing or use of this document.

2.2 CONCRETE MATERIALS

A. Source Limitations:

1. Obtain all concrete mixtures from a single ready-mixed concrete manufacturer for entire Project.
2. Obtain each type or class of cementitious material of the same brand from the same manufacturer's plant.
3. Obtain aggregate from single source.
4. Obtain each type of admixture from single source from single manufacturer.

B. Cementitious Materials:

1. Portland Cement: ASTM C150/C150M, gray.
2. Fly Ash: ASTM C618, Class C or F.
3. Slag Cement: ASTM C989/C989M, Grade 100 or 120.
4. Blended Hydraulic Cement: ASTM C595/C595M, cement.
5. Silica Fume: ASTM C1240 amorphous silica.

C. Normal-Weight Aggregates: ASTM C33/C33M, coarse aggregate or better, graded. Provide aggregates from a single source.

1. Alkali-Silica Reaction: Comply with one of the following:

a. Expansion Result of Aggregate: Not more than 0.04 percent at one-year when tested in accordance with ASTM C1293.
b. Expansion Results of Aggregate and Cementitious Materials in Combination: Not more than 0.10 percent at an age of 16 days when tested in accordance with ASTM C1567.
c. Alkali Content in Concrete: Not more than 4 lb./cu. yd. for moderately reactive aggregate or 3 lb./cu. yd. for highly reactive aggregate, when tested in accordance with ASTM C1293 and categorized in accordance with ASTM C1778, based on alkali content being calculated in accordance with ACI 301.

2. Maximum Coarse-Aggregate Size: 1 inch nominal. For Class H concrete, maximum coarse-aggregate size shall not exceed 3/8 inch nominal.
3. Fine Aggregate: Free of materials with deleterious reactivity to alkali in cement.

D. Chemical Admixtures: Certified by manufacturer to be compatible with other admixtures that do not contribute water-soluble chloride ions exceeding those permitted in hardened concrete. Do not use calcium chloride or admixtures containing calcium chloride in steel-reinforced concrete.

1. Water-Reducing Admixture: ASTM C494/C494M, Type A.
2. Retarding Admixture: ASTM C494/C494M, Type B.
3. Water-Reducing and -Retarding Admixture: ASTM C494/C494M, Type D.
4. High-Range, Water-Reducing Admixture: ASTM C494/C494M, Type F.
5. High-Range, Water-Reducing and -Retarding Admixture: ASTM C494/C494M, Type G.
6. Plasticizing and Retarding Admixture: ASTM C1017/C1017M, Type II.

Copyright © 2022 by the American Institute of Landscape Architects. Warning: This AIA MasterSpec based document is protected by U.S. Copyright Law and International Treaties. A valid, current MasterSpec license is required for editing or use of this document.

E. Color Pigment: ASTM C979/C979M, synthetic mineral-oxide pigments, color stable, free of carbon black, nonfading, and resistant to lime and other alkalis.

1. Color: As selected by Landscape Architect from manufacturer's full range.

2.3 CURING MATERIALS

A. Evaporation Retarder: Waterborne, monomolecular film forming, manufactured for application to fresh concrete.

B. Absorptive Cover: AASHTO M 182, Class 2, burlap cloth made from jute or kenaf, weighing approximately 9 oz./sq. yd. when dry.

C. Moisture-Retaining Cover: ASTM C171, polyethylene film burlap-polyethylene sheet.

1. Color:

a. Ambient Temperature Below 50 deg F: Black.
b. Ambient Temperature between 50 deg F and 85 deg F: Any color.
c. Ambient Temperature Above 85 deg F: White.

D. Curing Paper: 8-feet- wide paper, consisting of two layers of fibered kraft paper laminated with double coating of asphalt.

E. Water: Potable or complying with ASTM C1602/C1602M.

2.4 RELATED MATERIALS

A. Expansion- and Isolation-Joint-Filler Strips: ASTM D1751, asphalt-saturated cellulosic fiber.

B. Formwork to be smooth finish form boards for exposed walls: MDO or HDO

C. Semirigid Joint Filler: Two-component, semirigid, 100 percent solids, epoxy resin with a Type A shore durometer hardness of 80 in accordance with ASTM D2240.

D. Bonding Agent: ASTM C1059/C1059M, Type II, nonredispersible, acrylic emulsion or styrene butadiene.

E. Epoxy Bonding Adhesive: ASTM C881, two-component epoxy resin, capable of humid curing and bonding to damp surfaces, of class suitable for application temperature and of grade and class to suit requirements, and as follows:

1. Types I and II, nonload bearing, for bonding hardened or freshly mixed concrete to hardened concrete.

2.5 MIXTURES, GENERAL

A. Prepare design mixtures for each type and strength of concrete, proportioned on the basis of laboratory trial mixture or field test data, or both, in accordance with ACI 301.

Copyright © 2022 by the American Institute of Landscape Architects. Warning: This AIA MasterSpec based document is protected by U.S. Copyright Law and International Treaties. A valid, current MasterSpec license is required for editing or use of this document.

1. Use a qualified testing agency for preparing and reporting proposed mixture designs, based on laboratory trial mixtures.

B. Cementitious Materials: Limit percentage, by weight, of cementitious materials other than portland cement in concrete as follows:

1. Fly Ash or Other Pozzolans: 25 percent by mass.
2. Slag Cement: 50 percent by mass.
3. Silica Fume: 10 percent by mass.
4. Total of Fly Ash or Other Pozzolans, Slag Cement, and Silica Fume: 50 percent by mass, with fly ash or pozzolans not exceeding 25 percent by mass and silica fume not exceeding 10 percent by mass.
5. Total of Fly Ash or Other Pozzolans and Silica Fume: 35 percent by mass with fly ash or pozzolans not exceeding 25 percent by mass and silica fume not exceeding 10 percent by mass.

C. Admixtures: Use admixtures in accordance with manufacturer's written instructions.

1. Use water-reducing, high-range water-reducing, or plasticizing admixture in concrete, as required, for placement and workability.
2. Use water-reducing and -retarding admixture when required by high temperatures, low humidity, or other adverse placement conditions.
3. Use water-reducing admixture in pumped concrete.
4. Use corrosion-inhibiting admixture in concrete mixtures where indicated.

D. Color Pigment: Add color pigment to concrete mixture in accordance with manufacturer's written instructions and to result in hardened concrete color consistent with approved mockup.

2.6 CONCRETE MIXTURES

A. Class A: Normal-weight concrete used for footings.

1. Exposure Class: ACI 318 F0, S0, W0, C0 .
2. Minimum Compressive Strength: As indicated on Drawings.
3. Maximum w/cm: 0.50.
4. Slump Limit: 4 inches, plus or minus 1 inch.
5. Limit water-soluble, chloride-ion content in hardened concrete to 1.00 percent by weight of cement.
6. Synthetic Micro-Fiber: Uniformly disperse in concrete mixture at manufacturer's recommended rate, but not less than 1.5 lb/cu. yd.

B. Class H: Normal-weight concrete used for exterior formed site concrete exposed to view.

1. Exposure Class: ACI 318 F0, S0, W0, C0.
2. Minimum Compressive Strength: As indicated on Drawings.
3. Maximum w/cm: 0.45.
4. Slump Limit: 4 inches, plus or minus 1 inch. For narrow or heavily reinforced formed sections, 5 inches plus or minus 1 inch is permitted with use of a water-reducing admixture; do not add water to achieve increased slump.

Copyright © 2022 by the American Institute of Landscape Architects. Warning: This AIA MasterSpec based document is protected by U.S. Copyright Law and International Treaties. A valid, current MasterSpec license is required for editing or use of this document.

5. Limit water-soluble, chloride-ion content in hardened concrete to 0.30 percent by weight of cement.
6. Synthetic Micro-Fiber: Uniformly disperse in concrete mixture at manufacturer's recommended rate, but not less than 1.5 lb/cu. yd. Omit synthetic micro-fiber for surfaces designated to receive SF-3.0 finish or rubbed finish.
7. Color Pigment: Where indicated on Drawings, provide color pigment per §2.6.D.

C. Class J: Normal-weight concrete used for exterior retaining walls.

1. Exposure Class: ACI 318 F0, S0, W0, C0.
2. Minimum Compressive Strength: As indicated on Drawings.
3. Maximum w/cm: 0.45.
4. Slump Limit: 4 inches, plus or minus 1 inch.

5. Limit water-soluble, chloride-ion content in hardened concrete to 0.30 percent by weight of cement.
6. Synthetic Micro-Fiber: Uniformly disperse in concrete mixture at manufacturer's recommended rate, but not less than 1.5 lb/cu. yd.

2.7 CONCRETE MIXING

A. Ready-Mixed Concrete: Measure, batch, mix, and deliver concrete in accordance with ASTM C94/C94M, and furnish batch ticket information.

PART 3 - EXECUTION

3.1 EXAMINATION

A. Verification of Conditions:

1. Before placing concrete, verify that installation of concrete forms, accessories, and reinforcement, and embedded items is complete and that required inspections have been performed.
2. Do not proceed until unsatisfactory conditions have been corrected.

3.2 PREPARATION

A. Provide reasonable auxiliary services to accommodate field testing and inspections, acceptable to testing agency, including the following:

1. Daily access to the Work.
2. Incidental labor and facilities necessary to facilitate tests and inspections.
3. Secure space for storage, initial curing, and field curing of test samples, including source of water and continuous electrical power at Project site during site curing period for test samples.
4. Security and protection for test samples and for testing and inspection equipment at Project site.

Copyright © 2022 by the American Institute of Landscape Architects. Warning: This AIA MasterSpec based document is protected by U.S. Copyright Law and International Treaties. A valid, current MasterSpec license is required for editing or use of this document.

3.3 INSTALLATION

1. FORMWORK:

    1. Construct formwork to be reviewed by architect prior to pour.

    2. Form boards to be smooth finish, and sealed at joints to provide smooth form-board finish.

    3. Form ties, if necessary, to be equally spaced.

    4. Board joints to align with joints shown on plans, equally spaced. Custom cut boards may be required.

    5. Do not add water to concrete mix in the field

1. FINISHES: Surfaces shall be finished uniformly with the following finish:

    1. Broom: Pull broom across freshly floated concrete to produce medium texture in straight lines perpendicular to main line of traffic. Do not dampen brooms.

    2. Sandblast: Allow concrete to cure to sufficient strength so that it will not be damaged by blasting but not less than seven days and not more than 14 days. Use light sandblasting to remove cement mortar from surface and expose aggregate to match originally approved field sample.

        a. LIGHT SANDBLAST: expose 1/8”-1/4”

        b. MEDIUM SANDBLAST: expose ¼” – 3/8”

        c. HEAVY SANDBLAST: expose 3/8” – ½”

3. Retardant: Apply retardant product as specified on the drawings, to achieve the sandblast-like finish described above. Apply per manufacturer’s directions.

3.4 INSTALLATION OF EMBEDDED ITEMS

A. Place and secure anchorage devices and other embedded items required for adjoining Work that is attached to or supported by cast-in-place concrete.

    1. Use setting drawings, templates, diagrams, instructions, and directions furnished with items to be embedded.
    2. Install anchor rods, accurately located, to elevations required and complying with tolerances in Section 7.5 of ANSI/AISC 303.

3.5 JOINTS

A. Construct joints true to line, with faces perpendicular to surface plane of concrete.

B. Construction Joints: Coordinate with concrete element layout and concrete placement sequence.

Copyright © 2022 by the American Institute of Landscape Architects. Warning: This AIA MasterSpec based document is protected by U.S. Copyright Law and International Treaties. A valid, current MasterSpec license is required for editing or use of this document.

1. Install so strength and appearance of concrete are not impaired, at locations indicated on Drawings or as approved by Landscape Architect.
2. Place joints perpendicular to main reinforcement.

    a. Continue reinforcement across construction joints unless otherwise indicated.

3. Form keyed joints as indicated. Embed keys at least 1-1/2 inches into concrete.
4. Locate horizontal joints in walls at the top of footings, or as indicated on Drawings.
5. Space vertical joints in walls as indicated on Drawings. Unless otherwise indicated on Drawings, locate vertical joints beside piers integral with walls, near corners, and in concealed locations where possible.
6. Use a bonding agent at locations where fresh concrete is placed against hardened or partially hardened concrete surfaces.
7. Use epoxy-bonding adhesive at locations where fresh concrete is placed against hardened or partially hardened concrete surfaces.

C. Doweled Joints:

1. Install dowel bars and support assemblies at joints where indicated on Drawings.
2. Lubricate or asphalt coat one-half of dowel bar length to prevent concrete bonding to one side of joint.

D. Dowel Plates: Install dowel plates at joints where indicated on Drawings.

3.6 CONCRETE PLACEMENT

A. Before placing concrete, verify that installation of formwork, reinforcement, embedded items, is complete and that required inspections are completed.

B. Notify Landscape Architect and testing and inspection agencies 24 hours prior to commencement of concrete placement.

C. Do not add water to concrete during delivery, at Project site, or during placement unless approved by Landscape Architect in writing, but not to exceed the amount indicated on the concrete delivery ticket.

1. Do not add water to concrete after adding high-range water-reducing admixtures to mixture.

D. Before test sampling and placing concrete, water may be added at Project site, subject to limitations of ACI 301, but not to exceed the amount indicated on the concrete delivery ticket.

1. Do not add water to concrete after adding high-range water-reducing admixtures to mixture.

E. Deposit concrete continuously in one layer or in horizontal layers of such thickness that no new concrete is placed on concrete that has hardened enough to cause seams or planes of weakness.

1. If a section cannot be placed continuously, provide construction joints as indicated.
2. Deposit concrete to avoid segregation.

Copyright © 2022 by the American Institute of Landscape Architects. Warning: This AIA MasterSpec based document is protected by U.S. Copyright Law and International Treaties. A valid, current MasterSpec license is required for editing or use of this document.

3. Deposit concrete in horizontal layers of depth not to exceed formwork design pressures and in a manner to avoid inclined construction joints.
4. Consolidate placed concrete with mechanical vibrating equipment in accordance with ACI 301.

    a. Do not use vibrators to transport concrete inside forms.
    b. Insert and withdraw vibrators vertically at uniformly spaced locations to rapidly penetrate placed layer and at least 6 inches into preceding layer.
    c. Do not insert vibrators into lower layers of concrete that have begun to lose plasticity.
    d. At each insertion, limit duration of vibration to time necessary to consolidate concrete, and complete embedment of reinforcement and other embedded items without causing mixture constituents to segregate.

3.7 FINISHING FORMED SURFACES

A. As-Cast Surface Finishes:

1. ACI 301 Surface Finish SF-1.0: As-cast concrete texture imparted by form-facing material.

    a. Patch voids larger than 1-1/2 inches wide or 1/2 inch deep.
    b. Remove projections larger than 1 inch.
    c. Tie holes do not require patching.
    d. Surface Tolerance: ACI 117 Class D.
    e. Apply to concrete surfaces not exposed to public view.

2. ACI 301 Surface Finish SF-2.0: As-cast concrete texture imparted by form-facing material, arranged in an orderly and symmetrical manner with a minimum of seams.

    a. Patch voids larger than 3/4 inch wide or 1/2 inch deep.
    b. Remove projections larger than 1/4 inch.
    c. Patch tie holes.
    d. Surface Tolerance: ACI 117 Class B.
    e. Locations: Apply to concrete surfaces exposed to public view.

3. ACI 301 Surface Finish SF-3.0:

    a. Patch voids larger than 3/4 inch wide or 1/2 inch deep.
    b. Remove projections larger than 1/8 inch.
    c. Patch tie holes.
    d. Surface Tolerance: ACI 117 Class A.
    e. Locations: Apply to exposed architectural surfaces as indicated on Drawings.

B. Related Unformed Surfaces:

1. At tops of walls, horizontal offsets, and similar unformed surfaces adjacent to formed surfaces, strike off smooth and finish with a color and texture matching adjacent formed surfaces.

Copyright © 2022 by the American Institute of Landscape Architects. Warning: This AIA MasterSpec based document is protected by U.S. Copyright Law and International Treaties. A valid, current MasterSpec license is required for editing or use of this document.

2. Continue final surface treatment of formed surfaces uniformly across adjacent unformed surfaces unless otherwise indicated.

3.8 INSTALLATION OF MISCELLANEOUS CONCRETE ITEMS

A. Filling In:

1. Fill in holes and openings left in concrete structures after Work of other trades is in place unless otherwise indicated.
2. Mix, place, and cure concrete, as specified, to blend with in-place construction.
3. Provide other miscellaneous concrete filling indicated or required to complete the Work.

B. Equipment Bases and Foundations:

1. Coordinate sizes and locations of concrete bases with actual equipment provided.
2. Construct concrete bases as indicated on Drawings. Unless otherwise indicated, extend base not less than 6 inches beyond maximum equipment dimensions.
3. Minimum Compressive Strength: As indicated on Drawings.
4. Install dowel rods as indicated on Drawings. Unless otherwise indicated, install dowel rods on 18-inch centers around the full perimeter of concrete base.
5. Prior to pouring concrete, place and secure anchorage devices.

    a. Use setting drawings, templates, diagrams, instructions, and directions furnished with items to be embedded.
    b. Cast anchor-bolt insert into bases.
    c. Install anchor bolts to elevations required for proper attachment to supported equipment.

3.9 CONCRETE CURING

A. Protect freshly placed concrete from premature drying and excessive cold or hot temperatures.

1. Comply with ACI 301 and ACI 306.1 for cold weather protection during curing.
2. Comply with ACI 301 and ACI 305.1 for hot-weather protection during curing.
3. Maintain moisture loss no more than 0.2 lb/sq. ft. x h, calculated in accordance with ACI 305.1, before and during finishing operations.

B. Curing Formed Surfaces: Comply with ACI 308.1 as follows:

1. Cure formed concrete surfaces.
2. Cure concrete containing color pigments in accordance with color pigment manufacturer's instructions.
3. If forms remain during curing period, moist cure after loosening forms.
4. If removing forms before end of curing period, continue curing for remainder of curing period, as follows:

    a. Continuous Fogging: Maintain standing water on concrete surface until final setting of concrete.
    b. Continuous Sprinkling: Maintain concrete surface continuously wet.

Copyright © 2022 by the American Institute of Landscape Architects. Warning: This AIA MasterSpec based document is protected by U.S. Copyright Law and International Treaties. A valid, current MasterSpec license is required for editing or use of this document.

c. Absorptive Cover: Pre-dampen absorptive material before application; apply additional water to absorptive material to maintain concrete surface continuously wet.
d. Water-Retention Sheeting Materials: Cover exposed concrete surfaces with sheeting material, taping, or lapping seams.
e. Membrane-Forming Curing Compound: Apply uniformly in continuous operation by power spray or roller in accordance with manufacturer's written instructions.

1) Recoat areas subject to heavy rainfall within three hours after initial application.
2) Maintain continuity of coating and repair damage during curing period.

C. Curing Unformed Surfaces: Comply with ACI 308.1 as follows:

1. Begin curing immediately after finishing concrete.

3.10 TOLERANCES

A. Conform to ACI 117.

3.11 JOINT FILLING

A. Prepare, clean, and install joint filler in accordance with manufacturer's written instructions.

1. Defer joint filling until concrete has aged at least one month(s).
2. Do not fill joints until construction traffic has permanently ceased.

B. Remove dirt, debris, saw cuttings, curing compounds, and sealers from joints; leave contact faces of joints clean and dry.

C. Install semirigid joint filler full depth in saw-cut joints and at least 2 inches deep in formed joints.

D. Overfill joint, and trim joint filler flush with top of joint after hardening.

3.12 CONCRETE SURFACE REPAIRS

A. Defective Concrete:

1. Repair and patch defective areas when approved by Landscape Architect.
2. Remove and replace concrete that cannot be repaired and patched to Landscape Architect's approval.

B. Patching Mortar: Mix dry-pack patching mortar, consisting of 1 part portland cement to 2-1/2 parts fine aggregate passing a No. 16 sieve, using only enough water for handling and placing.

C. Repairing Formed Surfaces: Surface defects include color and texture irregularities, cracks, spalls, air bubbles, honeycombs, rock pockets, fins and other projections on the surface, and stains and other discolorations that cannot be removed by cleaning.

Copyright © 2022 by the American Institute of Landscape Architects. Warning: This AIA MasterSpec based document is protected by U.S. Copyright Law and International Treaties. A valid, current MasterSpec license is required for editing or use of this document.

1. Immediately after form removal, cut out honeycombs, rock pockets, and voids more than 1/2 inch in any dimension to solid concrete.

    a. Limit cut depth to 3/4 inch.
    b. Make edges of cuts perpendicular to concrete surface.
    c. Clean, dampen with water, and brush-coat holes and voids with bonding agent.
    d. Fill and compact with patching mortar before bonding agent has dried.
    e. Fill form-tie voids with patching mortar or cone plugs secured in place with bonding agent.

2. Repair defects on surfaces exposed to view by blending white portland cement and standard portland cement, so that, when dry, patching mortar matches surrounding color.

    a. Patch a test area at inconspicuous locations to verify mixture and color match before proceeding with patching.
    b. Compact mortar in place and strike off slightly higher than surrounding surface.

3. Repair defects on concealed formed surfaces that will affect concrete's durability and structural performance as determined by Landscape Architect.

D. Repairing Unformed Surfaces:

1. Test unformed surfaces, such as floors and slabs, for finish, and verify surface tolerances specified for each surface.

    a. Correct low and high areas.
    b. Test surfaces sloped to drain for trueness of slope and smoothness; use a sloped template.

2. Repair finished surfaces containing surface defects, including spalls, popouts, honeycombs, rock pockets, crazing, and cracks in excess of 0.01 inch wide or that penetrate to reinforcement or completely through unreinforced sections regardless of width, and other objectionable conditions.
3. After concrete has cured at least 14 days, correct high areas by grinding.
4. Correct localized low areas during, or immediately after, completing surface-finishing operations by cutting out low areas and replacing with patching mortar.

    a. Finish repaired areas to blend into adjacent concrete.

5. Repair defective areas, except random cracks and single holes 1 inch or less in diameter, by cutting out and replacing with fresh concrete.

    a. Remove defective areas with clean, square cuts, and expose steel reinforcement with at least a 3/4-inch clearance all around.
    b. Dampen concrete surfaces in contact with patching concrete and apply bonding agent.
    c. Mix patching concrete of same materials and mixture as original concrete, except without coarse aggregate.
    d. Place, compact, and finish to blend with adjacent finished concrete.
    e. Cure in same manner as adjacent concrete.

Copyright © 2022 by the American Institute of Landscape Architects. Warning: This AIA MasterSpec based document is protected by U.S. Copyright Law and International Treaties. A valid, current MasterSpec license is required for editing or use of this document.

6. Repair random cracks and single holes 1 inch or less in diameter with patching mortar.

    a. Groove top of cracks and cut out holes to sound concrete, and clean off dust, dirt, and loose particles.
    b. Dampen cleaned concrete surfaces and apply bonding agent.
    c. Place patching mortar before bonding agent has dried.
    d. Compact patching mortar and finish to match adjacent concrete.
    e. Keep patched area continuously moist for at least 72 hours.

E. Perform structural repairs of concrete, subject to Landscape Architect's approval, using epoxy adhesive and patching mortar.

F. Repair materials and installation not specified above may be used, subject to Landscape Architect's approval.

3.13 FIELD QUALITY CONTROL

A. Special Inspections: District will engage a special inspector to perform field tests and inspections and prepare testing and inspection reports.

B. Testing Agency: Engage a qualified testing and inspecting agency to perform tests and inspections and to submit reports.

1. Testing agency to be responsible for providing curing container for composite samples on Site and verifying that field-cured composite samples are cured in accordance with ASTM C31/C31M.
2. Testing agency to immediately report to Landscape Architect, Contractor, and concrete manufacturer any failure of Work to comply with Contract Documents.
3. Testing agency to report results of tests and inspections, in writing, to District, Landscape Architect, Contractor, and concrete manufacturer within 48 hours of inspections and tests.

    a. Test reports to include reporting requirements of ASTM C31/C31M, ASTM C39/C39M, and ACI 301, including the following as applicable to each test and inspection:

        1) Project name.
        2) Name of testing agency.
        3) Names and certification numbers of field and laboratory technicians performing inspections and testing.
        4) Name of concrete manufacturer.
        5) Date and time of inspection, sampling, and field testing.
        6) Date and time of concrete placement.
        7) Location in Work of concrete represented by samples.
        8) Date and time sample was obtained.
        9) Truck and batch ticket numbers.
        10) Design compressive strength at 28 days.
        11) Concrete mixture designation, proportions, and materials.
        12) Field test results.

Copyright © 2022 by the American Institute of Landscape Architects. Warning: This AIA MasterSpec based document is protected by U.S. Copyright Law and International Treaties. A valid, current MasterSpec license is required for editing or use of this document.

13) Information on storage and curing of samples before testing, including curing method and maximum and minimum temperatures during initial curing period.
14) Type of fracture and compressive break strengths at seven days and 28 days.

C. Batch Tickets: For each load delivered, submit three copies of batch delivery ticket to testing agency, indicating quantity, mix identification, admixtures, design strength, aggregate size, design air content, design slump at time of batching, and amount of water that can be added at Project site.

D. Inspections:

1. Headed bolts and studs.
2. Verification of use of required design mixture.
3. Concrete placement, including conveying and depositing.
4. Curing procedures and maintenance of curing temperature.
5. Batch Plant Inspections: On a random basis, as determined by Landscape Architect.

E. Concrete Tests: Testing of composite samples of fresh concrete obtained in accordance with ASTM C 172/C 172M to be performed in accordance with the following requirements:

1. Testing Frequency: Obtain one composite sample for each day's pour of each concrete mixture exceeding 5 cu. yd., but less than 25 cu. yd., plus one set for each additional 50 cu. yd. or fraction thereof.

   a. When frequency of testing provides fewer than five compressive-strength tests for each concrete mixture, testing to be conducted from at least five randomly selected batches or from each batch if fewer than five are used.

2. Slump: ASTM C143/C143M:

   a. One test at point of placement for each composite sample, but not less than one test for each day's pour of each concrete mixture.
   b. Perform additional tests when concrete consistency appears to change.

3. Air Content: ASTM C231/C231M pressure method, for normal-weight concrete:

   a. One test for each composite sample, but not less than one test for each day's pour of each concrete mixture.

4. Concrete Temperature: ASTM C1064/C1064M:

   a. One test hourly when air temperature is 40 deg F and below or 80 deg F and above, and one test for each composite sample.

5. Compression Test Specimens: ASTM C31/C31M:

   a. Cast and laboratory cure two sets of two 6-inch by 12-inch or 4-inch by 8-inch cylinder specimens for each composite sample.
   b. Cast, initial cure, and field cure two sets of two standard cylinder specimens for each composite sample.

Copyright © 2022 by the American Institute of Landscape Architects. Warning: This AIA MasterSpec based document is protected by U.S. Copyright Law and International Treaties. A valid, current MasterSpec license is required for editing or use of this document.

6. Compressive-Strength Tests: ASTM C39/C39M.

    a. Test one set of two laboratory-cured specimens at seven days and one set of two specimens at 28 days.
    b. Test one set of two field-cured specimens at seven days and one set of two specimens at 28 days.
    c. A compressive-strength test to be the average compressive strength from a set of two specimens obtained from same composite sample and tested at age indicated.

7. When strength of field-cured cylinders is less than 85 percent of companion laboratory-cured cylinders, Contractor to evaluate operations and provide corrective procedures for protecting and curing in-place concrete.
8. Strength of each concrete mixture will be satisfactory if every average of any three consecutive compressive-strength tests equals or exceeds specified compressive strength, and no compressive-strength test value falls below specified compressive strength by more than 500 psi if specified compressive strength is 5000 psi, or no compressive strength test value is less than 10 percent of specified compressive strength if specified compressive strength is greater than 5000 psi.
9. Nondestructive Testing: Impact hammer, sonoscope, or other nondestructive device may be permitted by Landscape Architect but will not be used as sole basis for approval or rejection of concrete.
10. Additional Tests:

    a. Testing and inspecting agency to make additional tests of concrete when test results indicate that slump, air entrainment, compressive strengths, or other requirements have not been met, as directed by Landscape Architect.
    b. Testing and inspecting agency may conduct tests to determine adequacy of concrete by cored cylinders complying with ASTM C42/C42M or by other methods as directed by Landscape Architect.

        1) Acceptance criteria for concrete strength to be in accordance with ACI 301, Section 1.6.6.3.

11. Additional testing and inspecting, at Contractor's expense, will be performed to determine compliance of replaced or additional work with specified requirements.
12. Correct deficiencies in the Work that test reports and inspections indicate do not comply with the Contract Documents.

3.14 PROTECTION

A. Protect concrete surfaces as follows:

1. Protect from petroleum stains.
2. Diaper hydraulic equipment used over concrete surfaces.
3. Prohibit use of pipe-cutting machinery over concrete surfaces.
4. Prohibit placement of steel items on concrete surfaces.
5. Prohibit use of acids or acidic detergents over concrete surfaces.

END OF SECTION 033000

Copyright © 2022 by the American Institute of Landscape Architects. Warning: This AIA MasterSpec based document is protected by U.S. Copyright Law and International Treaties. A valid, current MasterSpec license is required for editing or use of this document.

SECTION 032000 - CONCRETE REINFORCING

PART 1 - GENERAL

1.1 SUMMARY

A. Section Includes:

1. Steel reinforcement bars.
2. Welded-wire reinforcement.

B. Related Requirements:

1. Section 321313 "Concrete Paving" for reinforcing related to concrete pavement and walks.
2. Section 033000 "Cast-in-Place Concrete" for reinforcing related to other concrete elements.

1.2 PREINSTALLATION MEETINGS

A. Preinstallation Conference: Conduct conference at Project site.

1. Review the following:

a. Special inspection and testing and inspecting agency procedures for field quality control.
b. Construction contraction and isolation joints.
c. Steel-reinforcement installation.

1.3 ACTION SUBMITTALS

A. Product Data: For the following:

1. Each type of steel reinforcement.
2. Epoxy repair coating.
3. Zinc repair material.
4. Bar supports.
5. Mechanical splice couplers.

B. Shop Drawings: Comply with ACI SP-066:

1. Include placing drawings that detail fabrication, bending, and placement.
2. Include bar sizes, lengths, materials, grades, bar schedules, stirrup spacing, bent bar diagrams, bar arrangement, location of splices, lengths of lap splices, details of mechanical splice couplers, details of welding splices, tie spacing, hoop spacing, and supports for concrete reinforcement.
3. For structural thermal break insulated connection system, indicate general configuration, insulation dimensions, tension bars, compression pads, shear bars, and dimensions.

Copyright © 2022 by the American Institute of Architects. Warning: This AIA MasterSpec based document is protected by U.S. Copyright Law and International Treaties. A valid, current MasterSpec license is required for editing or use of this document.

C. Construction Joint Layout: Indicate proposed construction joints required to build the structure.

1. Location of construction joints is subject to approval of Landscape Architect.

1.4 INFORMATIONAL SUBMITTALS

A. Qualification Statements: For testing and inspection agency.

B. Welding certificates.

1. Reinforcement To Be Welded: Welding procedure specification in accordance with AWS D1.4/D1.4M.

C. Material Certificates: For each of the following, signed by manufacturers:

1. Epoxy-Coated Reinforcement: CRSI's "Epoxy Coating Plant Certification."
2. Dual-Coated Reinforcement: CRSI's "Epoxy Coating Plant Certification."

D. Material Test Reports: For the following, from a qualified testing agency:

1. Steel Reinforcement:

a. For reinforcement to be welded, mill test analysis for chemical composition and carbon equivalent of the steel in accordance with ASTM A706/A706M.

E. Field quality-control reports.

F. Minutes of preinstallation conference.

1.5 QUALITY ASSURANCE

A. Testing Agency Qualifications: An independent agency, acceptable to authorities having jurisdiction, qualified in accordance with ASTM C1077 and ASTM E329 for testing indicated.

B. Welding Qualifications: Qualify procedures and personnel in accordance with AWS D1.4/D 1.4M.

C. Mockups: Reinforcing for cast-concrete formed surfaces, to demonstrate tolerances and standard of workmanship.

1. Build panel approximately 100 sq. ft. for formed surface in the location indicated on Drawings or, if not indicated, as directed by Landscape Architect.
2. Subject to compliance with requirements, approved mockups may become part of the completed Work if undisturbed at time of Substantial Completion.

1.6 DELIVERY, STORAGE, AND HANDLING

A. Steel Reinforcement: Deliver, store, and handle steel reinforcement to prevent bending and damage and to avoid damaging coatings on steel reinforcement.

Copyright © 2022 by the American Institute of Architects. Warning: This AIA MasterSpec based document is protected by U.S. Copyright Law and International Treaties. A valid, current MasterSpec license is required for editing or use of this document.

1. Store reinforcement to avoid contact with earth.
2. Do not allow epoxy-coated reinforcement to be stored outdoors for more than 60 days without being stored under an opaque covering.
3. Do not allow dual-coated reinforcement to be stored outdoors for more than 60 days without being stored under an opaque covering.

PART 2 - PRODUCTS

2.1 STEEL REINFORCEMENT

A. Reinforcing Bars: ASTM A615/A615M, Grade 60, deformed.

B. Plain-Steel Welded-Wire Reinforcement: ASTM A1064/A1064M, plain, fabricated from as-drawn steel wire into flat sheets.

2.2 REINFORCEMENT ACCESSORIES

A. Joint Dowel Bars: ASTM A615/A615M, Grade 60, plain-steel bars, cut true to length with ends square and free of burrs.

B. Epoxy-Coated Joint Dowel Bars: ASTM A615/A615M, Grade 60, plain-steel bars, ASTM A775/A775M epoxy coated.

C. Bar Supports: Bolsters, chairs, spacers, and other devices for spacing, supporting, and fastening reinforcing bars and welded-wire reinforcement in place.

1. Manufacture bar supports from steel wire, plastic, or precast concrete in accordance with CRSI's "Manual of Standard Practice," of greater compressive strength than concrete and as follows:

a. For concrete surfaces exposed to view, where legs of wire bar supports contact forms, use CRSI Class 1 plastic-protected steel wire, all-plastic bar supports, or CRSI Class 2 stainless steel bar supports.

D. Steel Tie Wire: ASTM A1064/A1064M, annealed steel, not less than 0.0508 inch in diameter.

E. Stainless Steel Tie Wire: ASTM A1022/A1022M, not less than 0.0508 inch in diameter.

2.3 FABRICATING REINFORCEMENT

A. Fabricate steel reinforcement according to CRSI's "Manual of Standard Practice."

Copyright © 2022 by the American Institute of Architects. Warning: This AIA MasterSpec based document is protected by U.S. Copyright Law and International Treaties. A valid, current MasterSpec license is required for editing or use of this document.

PART 3 - EXECUTION

3.1 PREPARATION

A. Clean reinforcement of loose rust and mill scale, earth, ice, and other foreign materials that reduce bond to concrete.

3.2 INSTALLATION OF STEEL REINFORCEMENT

A. Comply with CRSI's "Manual of Standard Practice" for placing and supporting reinforcement.

B. Accurately position, support, and secure reinforcement against displacement.

1. Locate and support reinforcement with bar supports to maintain minimum concrete cover.
2. Do not tack weld crossing reinforcing bars.

C. Preserve clearance between bars of not less than 1 inch, not less than one bar diameter, or not less than 1-1/3 times size of large aggregate, whichever is greater.

D. Provide concrete coverage in accordance with ACI 318.

E. Set wire ties with ends directed into concrete, not toward exposed concrete surfaces.

F. Splices: Lap splices as indicated on Drawings.

1. Bars indicated to be continuous, and all vertical bars to be lapped not less than 36 bar diameters at splices, or 24 inches, whichever is greater.
2. Stagger splices in accordance with ACI 318.
3. Mechanical Splice Couplers: Install in accordance with manufacturer's instructions.
4. Weld reinforcing bars in accordance with AWS D1.4/D 1.4M, where indicated on Drawings.

G. Install welded-wire reinforcement in longest practicable lengths.

1. Support welded-wire reinforcement in accordance with CRSI "Manual of Standard Practice."

a. For reinforcement less than W4.0 or D4.0, continuous support spacing to not exceed 12 inches.

2. Lap edges and ends of adjoining sheets at least one wire spacing plus 2 inches for plain wire and 8 inches for deformed wire.
3. Offset laps of adjoining sheet widths to prevent continuous laps in either direction.
4. Lace overlaps with wire.

OINTS

H. Construction Joints: Install so strength and appearance of concrete are not impaired, at locations indicated or as approved by Landscape Architect.

Copyright © 2022 by the American Institute of Architects. Warning: This AIA MasterSpec based document is protected by U.S. Copyright Law and International Treaties. A valid, current MasterSpec license is required for editing or use of this document.

1. Place joints perpendicular to main reinforcement.
2. Continue reinforcement across construction joints unless otherwise indicated.
3. Do not continue reinforcement through sides of strip placements of floors and slabs.

I. Doweled Joints: Install dowel bars and support assemblies at joints where indicated. Lubricate or asphalt coat one-half of dowel length, to prevent concrete bonding to one side of joint.

3.3 INSTALLATION TOLERANCES

A. Comply with ACI 117.

3.4 FIELD QUALITY CONTROL

A. Special Inspections: District will engage a special inspector and qualified testing and inspecting agency to perform field tests and inspections and prepare test reports.

B. Testing Agency: Engage a qualified testing and inspecting agency to perform tests and inspections and to submit reports.

C. Inspections:

1. Steel-reinforcement placement.
2. Steel-reinforcement welding.

D. Manufacturer's Inspections: Engage manufacturer of structural thermal break insulated connection system to inspect completed installations prior to placement of concrete, and to provide written report that installation complies with manufacturer's written instructions.

END OF SECTION 032000

Copyright © 2022 by the American Institute of Architects. Warning: This AIA MasterSpec based document is protected by U.S. Copyright Law and International Treaties. A valid, current MasterSpec license is required for editing or use of this document.

SECTION 116800 - PLAY EQUIPMENT AND STRUCTURES

PART 1 - GENERAL

1.1 RELATED DOCUMENTS

A. Drawings and general provisions of the Contract, including General and Supplementary Conditions and Division 01 Specification Sections, apply to this Section.

1.2 SUMMARY

A. Section includes playground equipment as follows:

1. Freestanding playground equipment.
2. Composite playground equipment.

1.3 DEFINITIONS

A. Definitions in ASTM F1487 apply to Work of this Section.

B. IPEMA: International Play Equipment Manufacturers Association.

1.4 PREINSTALLATION MEETINGS

A. Preinstallation Conference: Conduct conference at Project site.

1.5 ACTION SUBMITTALS

A. Product Data: For each type of product.

B. Shop Drawings: For each type of playground equipment.

1. Include plans, elevations, sections, and attachment details.
2. Include fall heights and use zones for playground equipment, coordinated with the critical-height values of protective surfacing specified in Section 321816.13 "Playground Protective Surfacing."

C. Samples for Initial Selection: For each type of exposed finish.

1. Manufacturer's color charts.
2. Include Samples of accessories involving color selection.

D. Samples for Verification: For each type of exposed finish on the following products:

1. Include Samples of accessories to verify color and finish selection.

Copyright © 2022 by the American Institute of Architects. Warning: This AIA MasterSpec based document is protected by U.S. Copyright Law and International Treaties. A valid, current MasterSpec license is required for editing or use of this document.

2. Posts and Rails: Minimum 6 inches long.
3. Platforms: Minimum 6 inches square.
4. Molded Plastic: Minimum 3 inches square.

1.6 INFORMATIONAL SUBMITTALS

A. Qualification Data: For Installer, manufacturer, and testing agency.

B. Product Certificates: For each type of playground equipment.

C. Material Certificates: For the following items:

1. Shop finishes.

D. Field quality-control reports.

E. Sample Warranty: For manufacturer's special warranties.

1.7 CLOSEOUT SUBMITTALS

A. Maintenance Data: For playground equipment and finishes to include in maintenance manuals.

1.8 QUALITY ASSURANCE

A. Manufacturer Qualifications: A firm whose playground equipment components have been certified by IPEMA's third-party product certification service.

B. Installer Qualifications: An entity that employs installers and supervisors who are trained and approved by manufacturer.

1.9 WARRANTY

A. Special Warranty: Manufacturer agrees to repair or replace components of playground equipment that fail in materials or workmanship within specified warranty period.

1. Failures include, but are not limited to, the following:

a. Structural failures.
b. Deterioration of metals, metal finishes, and other materials beyond normal weathering and use.

2. Warranty Period: From date of Substantial Completion. Warranties shall be no less than the period provided by the Basis-of-Design as indicated on drawings.

Copyright © 2022 by the American Institute of Architects. Warning: This AIA MasterSpec based document is protected by U.S. Copyright Law and International Treaties. A valid, current MasterSpec license is required for editing or use of this document.

PART 2 - PRODUCTS

2.1 MANUFACTURERS

A. Source Limitations: Obtain playground equipment from single source from single manufacturer.

B. Playground equipment and components shall have the IPEMA Certification Seal.

C. The following playground equipment and components shall have the IPEMA Certification Seal:

2.2 PERFORMANCE REQUIREMENTS

A. Safety Standard: Provide playground equipment according to ASTM F1487.

2.3 FREESTANDING PLAYGROUND EQUIPMENT

A. Swing Set: As indicated on Drawings and per manufacturer’s specifications.

B. Slide: As indicated on Drawings and per manufacturer’s specifications.

C. Tunnel: As indicated on Drawings and per manufacturer’s specifications.

D. Climber: As indicated on Drawings and per manufacturer’s specifications

E. Rocking/Springing Equipment: As indicated on Drawings and per manufacturer’s specifications.

2.4 COMPOSITE PLAYGROUND EQUIPMENT

A. Composite Play Structure: Integral play assembly that provides more than one play activity; manufactured as a system or assembled from manufacturer's standard modular-sized units. As indicated on the drawings and per manufacturer’s specifications.

2.5 ALUMINUM FINISHES

A. Baked-Enamel or Powder-Coat Finish: Minimum dry film thickness of 1.5 mils, medium gloss. Comply with coating manufacturer's written instructions for cleaning, conversion coating, and applying and baking finish.

B. PVC Finish: UV-stabilized, mold-resistant, slip-resistant, matte-textured, dipped or sprayed-on PVC finish, with flame retardant added, and with minimum dry film thickness of 80 mils. Comply with coating manufacturer's written instructions for pretreatment and application.

Copyright © 2022 by the American Institute of Architects. Warning: This AIA MasterSpec based document is protected by U.S. Copyright Law and International Treaties. A valid, current MasterSpec license is required for editing or use of this document.

2.6 IRON AND STEEL FINISHES

A. Baked-Enamel or Powder-Coat Finish: After cleaning and pretreating, apply manufacturer's standard two-coat, baked-on finish consisting of prime coat and thermosetting topcoat to a minimum dry film thickness of 2 mils. Comply with coating manufacturer's written instructions for pretreatment, applying, and baking.

B. PVC Finish: UV-stabilized, mold-resistant, slip-resistant, matte-textured, dipped or sprayed-on PVC finish, with flame retardant added, and with minimum dry film thickness of 80 mils. Comply with coating manufacturer's written instructions for pretreatment and application.

2.7 STAINLESS-STEEL FINISHES

A. Surface Preparation: Remove tool and die marks and stretch lines, or blend into finish.

B. Bright, Cold-Rolled, Unpolished Finish: No. 2B.

PART 3 - EXECUTION

3.1 EXAMINATION

A. Examine substrates, areas, and conditions, with Installer present, for compliance with requirements for earthwork, subgrade elevations, surface and subgrade drainage, and other conditions affecting performance of the Work.

1. Do not begin installation before final grading required for placing playground equipment and protective surfacing is completed.

B. Proceed with installation only after unsatisfactory conditions have been corrected.

3.2 INSTALLATION

A. Comply with manufacturer's written installation instructions for each equipment type unless more stringent requirements are indicated. Anchor playground equipment securely, positioned at locations and elevations indicated.

1. Maximum Equipment Height: Coordinate installed fall heights of equipment with finished elevations and critical-height values of protective surfacing. Set equipment so fall heights and elevation requirements for age group use and accessibility are within required limits. Verify that playground equipment elevations comply with requirements for each type and component of equipment.

B. Post and Footing Excavation: Excavate holes for posts and footings as indicated in firm, undisturbed or compacted subgrade soil.

C. Post Set on Subgrade: Level bearing surfaces with drainage fill to required elevation.

Copyright © 2022 by the American Institute of Architects. Warning: This AIA MasterSpec based document is protected by U.S. Copyright Law and International Treaties. A valid, current MasterSpec license is required for editing or use of this document.

D. Post Set with Concrete Footing: Comply with Section 033000 "Cast-in-Place Concrete" for measuring, batching, mixing, transporting, forming, and placing concrete.

1. Set equipment posts in concrete footing. Protect portion of posts above footing from concrete splatter. Verify that posts are set plumb or at the correct angle, alignment, height, and spacing.

a. Place concrete around posts and vibrate or tamp for consolidation. Hold posts in position during placement and finishing operations until concrete is sufficiently cured.

2. Embedded Items: Follow equipment manufacturer's written instructions and drawings to ensure correct installation of anchorages for equipment.
3. Finishing Footings: Smooth top, and shape to shed water.

3.3 FIELD QUALITY CONTROL

A. Testing Agency: Engage a qualified testing agency to perform tests and inspections.

B. Perform the following tests and inspections with the assistance of a factory-authorized service representative.

1. Perform inspection and testing for each type of installed playground equipment according to ASTM F1487.

C. Playground equipment items will be considered defective if they do not pass tests and inspections.

D. Prepare test and inspection reports.

E. Notify City 48 hours in advance of date(s) and time(s) of testing and inspection.

END OF SECTION 116800

Copyright © 2022 by the American Institute of Architects. Warning: This AIA MasterSpec based document is protected by U.S. Copyright Law and International Treaties. A valid, current MasterSpec license is required for editing or use of this document.

SECTION 311000 - SITE CLEARING

PART 1 - GENERAL

1.1 RELATED DOCUMENTS

A. Drawings and general provisions of the Contract, including General and Supplementary Conditions and Division 01 Specification Sections, apply to this Section.

1.2 SUMMARY

A. Section Includes:

1. Protecting existing vegetation to remain.
2. Removing existing vegetation.
3. Clearing and grubbing.
4. Stripping and stockpiling topsoil.
5. Stripping and stockpiling rock.
6. Removing above- and below-grade site improvements.
7. Disconnecting, capping or sealing, and removing site utilities.
8. Temporary erosion and sedimentation control.

B. Related Requirements:

1. Section 015000 "Temporary Facilities and Controls" for temporary erosion- and sedimentation-control measures.

1.3 DEFINITIONS

A. Subsoil: Soil beneath the level of subgrade; soil beneath the topsoil layers of a naturally occurring soil profile, typified by less than 1 percent organic matter and few soil organisms.

B. Surface Soil: Soil that is present at the top layer of the existing soil profile. In undisturbed areas, surface soil is typically called "topsoil," but in disturbed areas such as urban environments, the surface soil can be subsoil.

C. Topsoil: Top layer of the soil profile consisting of existing native surface topsoil or existing in-place surface soil; the zone where plant roots grow.

D. Topsoil: Top layer of the soil profile consisting of existing native surface topsoil or existing in-place surface soil; the zone where plant roots grow. Its appearance is generally friable, pervious, and black or a darker shade of brown, gray, or red than underlying subsoil; reasonably free of subsoil, clay lumps, gravel, and other objects larger than 2 inches in diameter; and free of weeds, roots, toxic materials, or other nonsoil materials.

E. Plant-Protection Zone: Area surrounding individual trees, groups of trees, shrubs, or other vegetation to be protected during construction and indicated on Drawings.

Copyright © 2022 by the American Institute of Architects. Warning: This AIA MasterSpec based document is protected by U.S. Copyright Law and International Treaties. A valid, current MasterSpec license is required for editing or use of this document.

F. Tree-Protection Zone: Area surrounding individual trees or groups of trees to be protected during construction and indicated on Drawings indicated according to requirements in Section 015639 "Temporary Tree and Plant Protection.".

G. Vegetation: Trees, shrubs, groundcovers, grass, and other plants.

1.4 PREINSTALLATION MEETINGS

A. Preinstallation Conference: Conduct conference at Project site. Include the following:
   1. General Contractor
   2. Owner
   3. Landscape Architect
   4. Environmental Professional
   5. Arborist
   6. Subcontractors key to site clearing

1.5 MATERIAL OWNERSHIP

A. Except for materials indicated to be stockpiled or otherwise remain District's property, cleared materials shall become Contractor's property and shall be removed from Project site.

1.6 INFORMATIONAL SUBMITTALS

A. Existing Conditions: Documentation of existing trees and plantings, adjoining construction, and site improvements that establishes preconstruction conditions that might be misconstrued as damage caused by site clearing.

   1. Use sufficiently detailed photographs or video recordings.
   2. Include plans and notations to indicate specific wounds and damage conditions of each tree or other plant designated to remain.

B. Topsoil stripping and stockpiling program.

C. Rock stockpiling program.

D. Record Drawings: Identifying and accurately showing locations of capped utilities and other subsurface structural, electrical, and mechanical conditions.

1.7 QUALITY ASSURANCE

A. Topsoil Stripping and Stockpiling Program: Prepare a written program to systematically demonstrate the ability of personnel to properly follow procedures and handle materials and equipment during the Work. Include dimensioned diagrams for placement and protection of stockpiles.

B. Rock Stockpiling Program: Prepare a written program to systematically demonstrate the ability of personnel to properly follow procedures and handle materials and equipment during the Work. Include dimensioned diagrams for placement and protection of stockpiles.

Copyright © 2022 by the American Institute of Architects. Warning: This AIA MasterSpec based document is protected by U.S. Copyright Law and International Treaties. A valid, current MasterSpec license is required for editing or use of this document.

1.8 FIELD CONDITIONS

A. Traffic: Minimize interference with adjoining roads, streets, walks, and other adjacent occupied or used facilities during site-clearing operations.

1. Do not close or obstruct streets, walks, or other adjacent occupied or used facilities without permission from District and authorities having jurisdiction.
2. Provide alternate routes around closed or obstructed trafficways if required by District or authorities having jurisdiction.

B. Improvements on Adjoining Property: Authority for performing site clearing indicated on property adjoining District's property will be obtained by District before award of Contract.

1. Do not proceed with work on adjoining property until directed by Landscape Architect.

C. Salvageable Improvements: Carefully remove items indicated to be salvaged and store on District's premises where indicated.

D. Utility Locator Service: Notify Call Before You Dig for area where Project is located before site clearing.

E. Do not commence site clearing operations until temporary erosion- and sedimentation-control and plant-protection measures are in place.

F. Tree- and Plant-Protection Zones: Protect according to requirements in Section 015639 "Temporary Tree and Plant Protection."

G. Soil Stripping, Handling, and Stockpiling: Perform only when the soil is dry or slightly moist.

PART 2 - PRODUCTS

2.1 MATERIALS

A. Satisfactory Soil Material: Requirements for satisfactory soil material are specified in Section 312000 "Earth Moving."

1. Obtain approved borrow soil material off-site when satisfactory soil material is not available on-site.

B. Antirust Coating: Fast-curing, lead- and chromate-free, self-curing, universal modified-alkyd primer complying with MPI #23 (surface-tolerant, anticorrosive metal primer).

Copyright © 2022 by the American Institute of Architects. Warning: This AIA MasterSpec based document is protected by U.S. Copyright Law and International Treaties. A valid, current MasterSpec license is required for editing or use of this document.

PART 3 - EXECUTION

3.1 PREPARATION

A. Protect and maintain benchmarks and survey control points from disturbance during construction.

B. Verify that trees, shrubs, and other vegetation to remain or to be relocated have been flagged and that protection zones have been identified and enclosed according to requirements in Section 015639 "Temporary Tree and Plant Protection."

C. Protect existing site improvements to remain from damage during construction.

1. Restore damaged improvements to their original condition, as acceptable to District.

3.2 TEMPORARY EROSION AND SEDIMENTATION CONTROL

A. Provide temporary erosion- and sedimentation-control measures to prevent soil erosion and discharge of soil-bearing water runoff or airborne dust to adjacent properties and walkways, according to erosion- and sedimentation-control Drawings and requirements of authorities having jurisdiction.

B. Verify that flows of water redirected from construction areas or generated by construction activity do not enter or cross protection zones.

C. Inspect, maintain, and repair erosion- and sedimentation-control measures during construction until permanent vegetation has been established.

D. Remove erosion and sedimentation controls, and restore and stabilize areas disturbed during removal.

3.3 TREE AND PLANT PROTECTION

A. Protect trees and plants remaining on-site according to requirements in Section 015639 "Temporary Tree and Plant Protection."

B. Repair or replace trees, shrubs, and other vegetation indicated to remain or be relocated that are damaged by construction operations according to requirements in Section 015639 "Temporary Tree and Plant Protection."

3.4 EXISTING UTILITIES

A. District will arrange for disconnecting and sealing indicated utilities that serve existing structures before site clearing, when requested by Contractor.

1. Verify that utilities have been disconnected and capped before proceeding with site clearing.

Copyright © 2022 by the American Institute of Architects. Warning: This AIA MasterSpec based document is protected by U.S. Copyright Law and International Treaties. A valid, current MasterSpec license is required for editing or use of this document.

B. Locate, identify, disconnect, and seal or cap utilities indicated to be removed.

1. Arrange with utility companies to shut off indicated utilities.
2. District will arrange to shut off indicated utilities when requested by Contractor.

C. Locate, identify, and disconnect utilities indicated to be abandoned in place.

D. Interrupting Existing Utilities: Do not interrupt utilities serving facilities occupied by District or others, unless permitted under the following conditions and then only after arranging to provide temporary utility services according to requirements indicated:

1. Notify Landscape Architect not less than two days in advance of proposed utility interruptions.
2. Do not proceed with utility interruptions without Landscape Architect's written permission.

E. Excavate for and remove underground utilities indicated to be removed.

F. Removal of underground utilities is included in earthwork sections; in applicable fire suppression, plumbing, electrical, communications, electronic safety and security, and utilities sections; and in Section 024119 "Selective Demolition."

3.5 CLEARING AND GRUBBING

A. Remove obstructions, trees, shrubs, and other vegetation to permit installation of new construction.

1. Do not remove trees, shrubs, and other vegetation indicated to remain or to be relocated.
2. Grind down stumps and remove roots larger than 2 inches in diameter, obstructions, and debris to a depth of 18 inches below exposed subgrade.
3. Use only hand methods or air spade for grubbing within protection zones.
4. Chip removed tree branches and dispose of off-site.

B. Fill depressions caused by clearing and grubbing operations with satisfactory soil material unless further excavation or earthwork is indicated.

1. Place fill material in horizontal layers not exceeding a loose depth of 8 inches, and compact each layer to a density equal to adjacent original ground.

3.6 TOPSOIL STRIPPING

A. Remove sod and grass before stripping topsoil.

B. Strip topsoil to depth indicated on Drawings in a manner to prevent intermingling with underlying subsoil or other waste materials.

1. Remove subsoil and nonsoil materials from topsoil, including clay lumps, gravel, and other objects larger than 2 inches in diameter; trash, debris, weeds, roots, and other waste materials.

Copyright © 2022 by the American Institute of Architects. Warning: This AIA MasterSpec based document is protected by U.S. Copyright Law and International Treaties. A valid, current MasterSpec license is required for editing or use of this document.

C. Stockpile topsoil away from edge of excavations without intermixing with subsoil or other materials. Grade and shape stockpiles to drain surface water. Cover to prevent windblown dust and erosion by water.

1. Limit height of topsoil stockpiles to 72 inches.
2. Do not stockpile topsoil within protection zones.
3. Dispose of surplus topsoil. Surplus topsoil is that which exceeds quantity indicated to be stockpiled or reused.
4. Stockpile surplus topsoil to allow for respreading deeper topsoil.

3.7 STOCKPILING ROCK

A. Remove from area indicated on Drawings naturally formed rocks that measure more than 1 foot across in least dimension. Do not include excavated or crushed rock.

1. Separate or wash off non-rock materials from rocks, including soil, clay lumps, gravel, and other objects larger than 2 inches in diameter; trash, debris, weeds, roots, and other waste materials.

B. Stockpile rock where indicated on Drawings without intermixing with other materials. Cover to prevent windblown debris from accumulating among rocks.

1. Limit height of rock stockpiles to 36 inches.
2. Do not stockpile rock within protection zones.
3. Dispose of surplus rock. Surplus rock is that which exceeds quantity indicated to be stockpiled or reused.
4. Stockpile surplus rock to allow later use by the District.

3.8 SITE IMPROVEMENTS

A. Remove existing above- and below-grade improvements as indicated and necessary to facilitate new construction.

B. Remove slabs, paving, curbs, gutters, and aggregate base as indicated.

1. Unless existing full-depth joints coincide with line of demolition, neatly saw-cut along line of existing pavement to remain before removing adjacent existing pavement. Saw-cut faces vertically.
2. Paint cut ends of steel reinforcement in concrete to remain with two coats of antirust coating, following coating manufacturer's written instructions. Keep paint off surfaces that will remain exposed.

3.9 DISPOSAL OF SURPLUS AND WASTE MATERIALS

A. Remove surplus soil material, unsuitable topsoil, obstructions, demolished materials, and waste materials including trash and debris, and legally dispose of them off District's property.

B. Burning tree, shrub, and other vegetation waste is permitted according to burning requirements and permitting of authorities having jurisdiction. Control such burning to produce the least

Copyright © 2022 by the American Institute of Architects. Warning: This AIA MasterSpec based document is protected by U.S. Copyright Law and International Treaties. A valid, current MasterSpec license is required for editing or use of this document.

smoke or air pollutants and minimum annoyance to surrounding properties. Burning of other waste and debris is prohibited.

C. Separate recyclable materials produced during site clearing from other nonrecyclable materials. Store or stockpile without intermixing with other materials, and transport them to recycling facilities. Do not interfere with other Project work.

END OF SECTION 311000

Copyright © 2022 by the American Institute of Architects. Warning: This AIA MasterSpec based document is protected by U.S. Copyright Law and International Treaties. A valid, current MasterSpec license is required for editing or use of this document.

SECTION 321313 - CONCRETE PAVING

PART 1 - GENERAL

1.1 SUMMARY

A. Section includes concrete paving including the following:

1. Walks (Vehicular Access).
2. Curbs and gutters.
3. Walks (Pedestrian Access)
4. Mow curbs.

B. Related Requirements:

1. Section 033000 "Cast-in-Place Concrete" for general building applications of concrete.
2. Section 321373 "Concrete Paving Joint Sealants" for joint sealants in expansion and contraction joints within concrete paving and in joints between concrete paving and asphalt paving or adjacent construction.
3. Section 321723 "Pavement Markings."
4. Section 321726 "Tactile Warning Surfacing" for detectable warning tiles.

1.2 DEFINITIONS

A. Cementitious Materials: Portland cement alone or in combination with one or more of blended hydraulic cement, fly ash, slag cement, and other pozzolans.

B. W/C Ratio: The ratio by weight of water to cementitious materials.

1.3 PREINSTALLATION MEETINGS

A. Preinstallation Conference: Conduct conference at Project site.

1. Review methods and procedures related to concrete paving, including but not limited to, the following:

   a. Concrete mixture design.
   b. Quality control of concrete materials and concrete paving construction practices.

2. Require representatives of each entity directly concerned with concrete paving to attend, including the following:

   a. Contractor's superintendent.
   b. Independent testing agency responsible for concrete design mixtures.
   c. Ready-mix concrete manufacturer.
   d. Concrete paving Subcontractor.

Copyright © 2022 by the American Institute of Architects. Warning: This AIA MasterSpec based document is protected by U.S. Copyright Law and International Treaties. A valid, current MasterSpec license is required for editing or use of this document.

e. Manufacturer's representative of stamped concrete paving system used for stamped detectable warnings.

1.4 ACTION SUBMITTALS

A. Product Data: For each type of product.

B. Samples for Initial Selection: For each type of product, ingredient, or admixture requiring color selection.

C. Samples for Verification: For each type of product or exposed finish, prepared as Samples of size indicated below:

1. Exposed Aggregate: 1 lbs Sample of each mix.

D. Design Mixtures: For each concrete paving mixture. Include alternate design mixtures when characteristics of materials, Project conditions, weather, test results, or other circumstances warrant adjustments.

1.5 INFORMATIONAL SUBMITTALS

A. Qualification Data: For qualified Installer of stamped detectable warnings ready-mix concrete manufacturer and testing agency.

B. Material Certificates: For the following, from manufacturer:

1. Cementitious materials.
2. Steel reinforcement and reinforcement accessories.
3. Fiber reinforcement.
4. Admixtures.
5. Curing compounds.
6. Applied finish materials.
7. Bonding agent or epoxy adhesive.
8. Joint fillers.

C. Material Test Reports: For each of the following:

1. Aggregates: Include service-record data indicating absence of deleterious expansion of concrete due to alkali-aggregate reactivity.

D. Field quality-control reports.

1.6 QUALITY ASSURANCE

A. Stamped Detectable Warning Installer Qualifications: An employer of workers trained and approved by manufacturer of stamped concrete paving systems.

Copyright © 2022 by the American Institute of Architects. Warning: This AIA MasterSpec based document is protected by U.S. Copyright Law and International Treaties. A valid, current MasterSpec license is required for editing or use of this document.

B. Ready-Mix-Concrete Manufacturer Qualifications: A firm experienced in manufacturing ready-mixed concrete products and that complies with ASTM C94/C94M requirements for production facilities and equipment.

1. Manufacturer certified according to NRMCA's "Certification of Ready Mixed Concrete Production Facilities" (Quality Control Manual - Section 3, "Plant Certification Checklist").

C. Testing Agency Qualifications: Qualified according to ASTM C1077 and ASTM E329 for testing indicated.

1. Personnel conducting field tests must be qualified as ACI Concrete Field Testing Technician, Grade 1, according to ACI CP-1 or an equivalent certification program.

D. Mockups: Build mockups to verify selections made under Sample submittals and to demonstrate aesthetic effects and set quality standards for materials and execution.

1. Build mockups of full-thickness sections of concrete paving to demonstrate typical joints; surface finish, texture, and color; curing; and standard of workmanship.
2. Build mockups of concrete paving in area outside of the construction area, as defined during the preconstruction meeting where directed by Landscape Architect and not less than 96 inches by 96 inches. Include full-size detectable warning.
3. Approval of mockups does not constitute approval of deviations from the Contract Documents contained in mockups unless Landscape Architect specifically approves such deviations in writing.
4. Subject to compliance with requirements, approved mockups may become part of the completed Work if undisturbed at time of Substantial Completion.

1.7 PRECONSTRUCTION TESTING

A. Preconstruction Testing Service: Engage a qualified independent testing agency to perform preconstruction testing on concrete paving mixtures.

1.8 FIELD CONDITIONS

A. Traffic Control: Maintain access for vehicular and pedestrian traffic as required for other construction activities.

B. Cold-Weather Concrete Placement: Protect concrete work from physical damage or reduced strength that could be caused by frost, freezing, or low temperatures. Comply with ACI 306.1 and the following:

1. When air temperature has fallen to or is expected to fall below 40 deg F, uniformly heat water and aggregates before mixing to obtain a concrete mixture temperature of not less than 50 deg F and not more than 80 deg F at point of placement.
2. Do not use frozen materials or materials containing ice or snow.
3. Do not use calcium chloride, salt, or other materials containing antifreeze agents or chemical accelerators unless otherwise specified and approved in design mixtures.

Copyright © 2022 by the American Institute of Architects. Warning: This AIA MasterSpec based document is protected by U.S. Copyright Law and International Treaties. A valid, current MasterSpec license is required for editing or use of this document.

C. Hot-Weather Concrete Placement: Comply with ACI 301 and as follows when hot-weather conditions exist:
   1. Do not install concrete when air temperature is above 90 degrees.
   2. Cover steel reinforcement with water-soaked burlap, so steel temperature will not exceed ambient air temperature immediately before embedding in concrete.
   3. Fog-spray forms, steel reinforcement, and subgrade just before placing concrete. Keep subgrade moisture uniform without standing water, soft spots, or dry areas.

PART 2 - PRODUCTS

2.1 CONCRETE, GENERAL

A. ACI Publications: Comply with ACI 301 unless otherwise indicated.

2.2 FORMS

A. Form Materials: Plywood, metal, metal-framed plywood, or other approved panel-type materials to provide full-depth, continuous, straight, and smooth exposed surfaces.

   1. Use flexible or uniformly curved forms for curves with a radius of 100 feet or less. Do not use notched and bent forms.

B. Form-Release Agent: Commercially formulated form-release agent that will not bond with, stain, or adversely affect concrete surfaces and that will not impair subsequent treatments of concrete surfaces.

2.3 STEEL REINFORCEMENT

A. Plain-Steel Welded-Wire Reinforcement: ASTM A1064/A1064M, fabricated from as-drawnsteel wire into flat sheets.

B. Reinforcing Bars: ASTM A615/A615M, Grade 60; deformed.

C. Steel Bar Mats: ASTM A184/A184M; with ASTM A615/A615M, Grade 60 deformed bars; assembled with clips.

D. Plain-Steel Wire: ASTM A1064/A1064M, as drawn.

E. Joint Dowel Bars: ASTM A615/A615M, Grade 60 plain-steel bars. Cut bars true to length with ends square and free of burrs.

F. Tie Bars: ASTM A615/A615M, Grade 60; deformed.

G. Hook Bolts: ASTM A307, Grade A, internally and externally threaded. Design hook-bolt joint assembly to hold coupling against paving form and in position during concreting operations, and to permit removal without damage to concrete or hook bolt.

Copyright © 2022 by the American Institute of Architects. Warning: This AIA MasterSpec based document is protected by U.S. Copyright Law and International Treaties. A valid, current MasterSpec license is required for editing or use of this document.

H. Bar Supports: Bolsters, chairs, spacers, and other devices for spacing, supporting, and fastening reinforcing bars, welded-wire reinforcement, and dowels in place. Manufacture bar supports according to CRSI's "Manual of Standard Practice" from steel wire, plastic, or precast concrete of greater compressive strength than concrete specified, and as follows:

1. Equip wire bar supports with sand plates or horizontal runners where base material will not support chair legs.
2. For epoxy-coated reinforcement, use epoxy-coated or other dielectric-polymer-coated wire bar supports.

2.4 CONCRETE MATERIALS

A. Cementitious Materials: Use the following cementitious materials, of same type, brand, and source throughout Project:

1. Portland Cement: ASTM C150/C150M, gray portland cement Type I.
2. Fly Ash: ASTM C618, Class C or Class F.
3. Slag Cement: ASTM C989/C989M, Grade 100 or 120.
4. Blended Hydraulic Cement: ASTM C595/C595M, Type IS, portland blast-furnace slag cement.

B. Normal-Weight Aggregates: ASTM C33/C33M,, uniformly graded. Provide aggregates from a single source with documented service-record data of at least 10 years' satisfactory service in similar paving applications and service conditions using similar aggregates and cementitious materials.

1. Maximum Coarse-Aggregate Size: 1-1/2 inches nominal.
2. Fine Aggregate: Free of materials with deleterious reactivity to alkali in cement.

C. Air-Entraining Admixture: ASTM C260/C260M.

D. Chemical Admixtures: Admixtures certified by manufacturer to be compatible with other admixtures and to contain not more than 0.1 percent water-soluble chloride ions by mass of cementitious material.

1. Water-Reducing Admixture: ASTM C494/C494M, Type A.
2. Retarding Admixture: ASTM C494/C494M, Type B.
3. Water-Reducing and Retarding Admixture: ASTM C494/C494M, Type D.
4. High-Range, Water-Reducing Admixture: ASTM C494/C494M, Type F.
5. High-Range, Water-Reducing and Retarding Admixture: ASTM C494/C494M, Type G.
6. Plasticizing and Retarding Admixture: ASTM C1017/C1017M, Type II.

E. Color Pigment: ASTM C979/C979M, synthetic mineral-oxide pigments or colored water-reducing admixtures; color stable, free of carbon black, nonfading, and resistant to lime and other alkalis.

1. Color: As selected by Landscape Architect from manufacturer's full range.

F. Water: Potable and complying with ASTM C94/C94M.

Copyright © 2022 by the American Institute of Architects. Warning: This AIA MasterSpec based document is protected by U.S. Copyright Law and International Treaties. A valid, current MasterSpec license is required for editing or use of this document.

2.5 CURING MATERIALS

A. Absorptive Cover: AASHTO M 182,.

B. Moisture-Retaining Cover: ASTM C171, polyethylene film or white burlap-polyethylene sheet.

C. Water: Potable.

D. Evaporation Retarder: Waterborne, monomolecular, film forming, manufactured for application to fresh concrete.

E. Clear, Waterborne, Membrane-Forming Curing Compound: ASTM C309, Type 1, Class B, dissipating.

F. White, Waterborne, Membrane-Forming Curing Compound: ASTM C309, Type 2, Class B, dissipating.

2.6 RELATED MATERIALS

A. Joint Fillers: ASTM D1751, asphalt-saturated cellulosic fiber or ASTM D8139, semirigid, closed-cell polypropylene foam in preformed strips.

B. Slip-Resistive Aggregate Finish: Factory-graded, packaged, rustproof, nonglazing, abrasive aggregate of fused aluminum-oxide granules or crushed emery aggregate containing not less than 50 percent aluminum oxide and not less than 20 percent ferric oxide; unaffected by freezing, moisture, and cleaning materials.

C. Bonding Agent: ASTM C1059/C1059M, Type II, non-redispersible, acrylic emulsion or styrene butadiene.

D. Epoxy-Bonding Adhesive: ASTM C881/C881M, two-component epoxy resin capable of humid curing and bonding to damp surfaces; of class suitable for application temperature, of grade complying with requirements, and of the following types:

1. Types I and II, nonload bearing, for bonding hardened or freshly mixed concrete to hardened concrete.

2.7 CONCRETE MIXTURES

A. Prepare design mixtures, proportioned according to ACI 301, for each type and strength of normal-weight concrete, and as determined by either laboratory trial mixtures or field experience.

1. Use a qualified independent testing agency for preparing and reporting proposed concrete design mixtures for the trial batch method.
2. When automatic machine placement is used, determine design mixtures and obtain laboratory test results that comply with or exceed requirements.

B. Cementitious Materials: Limit percentage, by weight, of cementitious materials other than portland cement in concrete as follows:

Copyright © 2022 by the American Institute of Architects. Warning: This AIA MasterSpec based document is protected by U.S. Copyright Law and International Treaties. A valid, current MasterSpec license is required for editing or use of this document.

1. Fly Ash or Pozzolan: no more than 15 percent.
2. Slag Cement: 50 percent.
3. Combined Fly Ash or Pozzolan, and Slag Cement: 50 percent, with fly ash or pozzolan not exceeding 15 percent.

C. Limit water-soluble, chloride-ion content in hardened concrete to 0.30 percent by weight of cement.

D. Chemical Admixtures: Use admixtures according to manufacturer's written instructions.

1. Use water-reducing admixture plasticizing and retarding admixture in concrete as required for placement and workability.
2. Use water-reducing and retarding admixture when required by high temperatures, low humidity, or other adverse placement conditions.

E. Color Pigment: Add color pigment to concrete mixture according to manufacturer's written instructions and to result in hardened concrete color consistent with approved mockup.

F. Concrete Mixtures: Normal-weight concrete.

1. Compressive Strength (28 Days): 3,500 psi.
2. Maximum W/C Ratio at Point of Placement: 0.45.
3. Slump Limit: 4 inches, plus or minus 1 inch.

2.8 CONCRETE MIXING

A. Ready-Mixed Concrete: Measure, batch, and mix concrete materials and concrete according to ASTM C94/C94M and ASTM C1116/C1116M. Furnish batch certificates for each batch discharged and used in the Work.

1. When air temperature is between 85 and 90 deg F, reduce mixing and delivery time from 1-1/2 hours to 75 minutes;.

PART 3 - EXECUTION

3.1 EXAMINATION

A. Examine exposed subgrades and subbase surfaces for compliance with requirements for dimensional, grading, and elevation tolerances.

B. Proof-roll prepared subbase surface below concrete paving to identify soft pockets and areas of excess yielding.

1. Completely proof-roll subbase in one direction and repeat in perpendicular direction. Limit vehicle speed to 3 mph.
2. Proof-roll with a pneumatic-tired and loaded, 10-wheel, tandem-axle dump truck weighing not less than 15 tons.
3. Correct subbase with soft spots and areas of pumping or rutting exceeding depth of 1/2 inch according to requirements in Section 312000 "Earth Moving."

Copyright © 2022 by the American Institute of Architects. Warning: This AIA MasterSpec based document is protected by U.S. Copyright Law and International Treaties. A valid, current MasterSpec license is required for editing or use of this document.

C. Proceed with installation only after unsatisfactory conditions have been corrected.

3.2 PREPARATION

A. Remove loose material from compacted subbase surface immediately before placing concrete.

3.3 EDGE FORMS AND SCREED CONSTRUCTION

A. Set, brace, and secure edge forms, bulkheads, and intermediate screed guides to required lines, grades, and elevations. Install forms to allow continuous progress of work and so forms can remain in place at least 24 hours after concrete placement.

B. Clean forms after each use and coat with form-release agent to ensure separation from concrete without damage.

3.4 INSTALLATION OF STEEL REINFORCEMENT

A. General: Comply with CRSI's "Manual of Standard Practice" for fabricating, placing, and supporting reinforcement.

B. Clean reinforcement of loose rust and mill scale, earth, ice, or other bond-reducing materials.

C. Arrange, space, and securely tie bars and bar supports to hold reinforcement in position during concrete placement. Maintain minimum cover to reinforcement.

D. Install welded-wire reinforcement in lengths as long as practicable. Lap adjoining pieces at least one full mesh, and lace splices with wire. Offset laps of adjoining widths to prevent continuous laps in either direction.

E. Zinc-Coated Reinforcement: Use galvanized-steel wire ties to fasten zinc-coated reinforcement. Repair cut and damaged zinc coatings with zinc repair material.

F. Epoxy-Coated Reinforcement: Use epoxy-coated steel wire ties to fasten epoxy-coated reinforcement. Repair cut and damaged epoxy coatings with epoxy repair coating according to ASTM D3963/D3963M.

G. Install fabricated bar mats in lengths as long as practicable. Handle units to keep them flat and free of distortions. Straighten bends, kinks, and other irregularities, or replace units as required before placement. Set mats for a minimum 2-inch overlap of adjacent mats.

3.5 JOINTS

A. General: Form construction, isolation, and contraction joints and tool edges true to line, with faces perpendicular to surface plane of concrete. Construct transverse joints at right angles to centerline unless otherwise indicated.

1. When joining existing paving, place transverse joints to align with previously placed joints unless otherwise indicated.

Copyright © 2022 by the American Institute of Architects. Warning: This AIA MasterSpec based document is protected by U.S. Copyright Law and International Treaties. A valid, current MasterSpec license is required for editing or use of this document.

B. Construction Joints: Set construction joints at side and end terminations of paving and at locations where paving operations are stopped for more than one-half hour unless paving terminates at isolation joints.

1. Continue steel reinforcement across construction joints unless otherwise indicated. Do not continue reinforcement through sides of paving strips unless otherwise indicated.
2. Provide tie bars at sides of paving strips where indicated.
3. Butt Joints: Use bonding agent at joint locations where fresh concrete is placed against hardened or partially hardened concrete surfaces.
4. Keyed Joints: Provide preformed keyway-section forms or bulkhead forms with keys unless otherwise indicated. Embed keys at least 1-1/2 inches into concrete.
5. Doweled Joints: Install dowel bars and support assemblies at joints where indicated. Lubricate or coat with asphalt one-half of dowel length to prevent concrete bonding to one side of joint.

C. Isolation Joints: Form isolation joints of preformed joint-filler strips abutting concrete curbs, catch basins, manholes, inlets, structures, other fixed objects, and where indicated.

1. Locate expansion joints at intervals of 50 feet unless otherwise indicated.
2. Extend joint fillers full width and depth of joint.
3. Terminate joint filler not less than 1/2 inch or more than 1 inch below finished surface if joint sealant is indicated.
4. Place top of joint filler flush with finished concrete surface if joint sealant is not indicated.
5. Furnish joint fillers in one-piece lengths. Where more than one length is required, lace or clip joint-filler sections together.
6. During concrete placement, protect top edge of joint filler with metal, plastic, or other temporary preformed cap. Remove protective cap after concrete has been placed on both sides of joint.

D. Contraction Joints: Form weakened-plane contraction joints, sectioning concrete into areas as indicated. Construct contraction joints for a depth equal to at least one-fourth of the concrete thickness, as follows:

1. Grooved Joints: Form contraction joints after initial floating by grooving and finishing each edge of joint with grooving tool to a 1/4-inch radius. Repeat grooving of contraction joints after applying surface finishes. Eliminate grooving-tool marks on concrete surfaces.

   a. Tolerance: Ensure that grooved joints are within 3 inches either way from centers of dowels.

2. Sawed Joints: Form contraction joints with power saws equipped with shatterproof abrasive or diamond-rimmed blades. Cut 1/8-inch- wide joints into concrete when cutting action will not tear, abrade, or otherwise damage surface and before developing random contraction cracks.

   a. Tolerance: Ensure that sawed joints are within 3 inches either way from centers of dowels.

Copyright © 2022 by the American Institute of Architects. Warning: This AIA MasterSpec based document is protected by U.S. Copyright Law and International Treaties. A valid, current MasterSpec license is required for editing or use of this document.

3. Doweled Contraction Joints: Install dowel bars and support assemblies at joints where indicated. Lubricate or coat with asphalt one-half of dowel length to prevent concrete bonding to one side of joint.

E. Edging: After initial floating, tool edges of paving, gutters, curbs, and joints in concrete with an edging tool to a 1/4-inch radius. Repeat tooling of edges after applying surface finishes. Eliminate edging-tool marks on concrete surfaces.

3.6 CONCRETE PLACEMENT

A. Before placing concrete, inspect and complete formwork installation, steel reinforcement, and items to be embedded or cast-in.

B. Moisten subbase to provide a uniform dampened condition at time concrete is placed. Do not place concrete around manholes or other structures until they are at required finish elevation and alignment.

C. Comply with ACI 301 requirements for measuring, mixing, transporting, and placing concrete.

D. Do not add water to concrete during delivery or at Project site. Do not add water to fresh concrete after testing.

E. Deposit and spread concrete in a continuous operation between transverse joints. Do not push or drag concrete into place or use vibrators to move concrete into place.

F. Consolidate concrete according to ACI 301 by mechanical vibrating equipment supplemented by hand spading, rodding, or tamping.

1. Consolidate concrete along face of forms and adjacent to transverse joints with an internal vibrator. Keep vibrator away from joint assemblies, reinforcement, or side forms. Use only square-faced shovels for hand spreading and consolidation. Consolidate with care to prevent dislocating reinforcement dowels and joint devices.

G. Screed paving surface with a straightedge and strike off.

H. Commence initial floating using bull floats or derbies to impart an open-textured and uniform surface plane before excess moisture or bleedwater appears on the surface. Do not further disturb concrete surfaces before beginning finishing operations or spreading surface treatments.

I. Curbs and Gutters: Use design mixture for automatic machine placement. Produce curbs and gutters to required cross section, lines, grades, finish, and jointing.

J. Slip-Form Paving: Use design mixture for automatic machine placement. Produce paving to required thickness, lines, grades, finish, and jointing.

1. Compact subbase and prepare subgrade of sufficient width to prevent displacement of slip-form paving machine during operations.

Copyright © 2022 by the American Institute of Architects. Warning: This AIA MasterSpec based document is protected by U.S. Copyright Law and International Treaties. A valid, current MasterSpec license is required for editing or use of this document.

3.7 CONCRETE PROTECTION AND CURING

A. General:

1. Protect freshly placed concrete from premature drying and excessive cold or hot temperatures.
2. Protect freshly place concrete for 28 days by maintaining clear of debris, material storage, vehicles, equipment or any item being placed on concrete that may cause structural damage.

B. Comply with ACI 306.1 for cold-weather protection.

C. Evaporation Retarder: Apply evaporation retarder to concrete surfaces if hot, dry, or windy conditions cause moisture loss approaching 0.2 lb/sq. ft. x h before and during finishing operations. Apply according to manufacturer's written instructions after placing, screeding, and bull floating or darbying concrete but before float finishing.

D. Begin curing after finishing concrete but not before free water has disappeared from concrete surface.

E. Curing Methods: Cure concrete by moisture curing, curing compound, or a combination of these as follows:

1. Moisture Curing: Keep surfaces continuously moist for not less than seven days with the following materials:

   a. Water.
   b. Continuous water-fog spray.
   c. Absorptive cover, water saturated and kept continuously wet. Cover concrete surfaces and edges with 12-inch lap over adjacent absorptive covers.

2. Moisture-Retaining-Cover Curing: Cover concrete surfaces with moisture-retaining cover, placed in widest practicable width, with sides and ends lapped at least 12 inches, and sealed by waterproof tape or adhesive. Immediately repair any holes or tears occurring during installation or curing period, using cover material and waterproof tape.
3. Curing Compound: Apply uniformly in continuous operation by power spray or roller according to manufacturer's written instructions. Recoat areas subjected to heavy rainfall within three hours after initial application. Maintain continuity of coating, and repair damage during curing period.

3.8 PAVING TOLERANCES

A. Comply with tolerances in ACI 117 and as follows:

1. Elevation: 3/4 inch.
2. Thickness: Plus 3/8 inch, minus 1/4 inch.
3. Surface: Gap below 10-feet- long; unleveled straightedge not to exceed 1/2 inch.
4. Alignment of Tie-Bar End Relative to Line Perpendicular to Paving Edge: 1/2 inch per 12 inches of tie bar.
5. Lateral Alignment and Spacing of Dowels: 1 inch.

Copyright © 2022 by the American Institute of Architects. Warning: This AIA MasterSpec based document is protected by U.S. Copyright Law and International Treaties. A valid, current MasterSpec license is required for editing or use of this document.

6. Vertical Alignment of Dowels: 1/4 inch.
7. Alignment of Dowel-Bar End Relative to Line Perpendicular to Paving Edge: 1/4 inch per 12 inches of dowel.
8. Joint Spacing: 3 inches.
9. Contraction Joint Depth: Plus 1/4 inch, no minus.
10. Joint Width: Plus 1/8 inch, no minus.

3.9 FIELD QUALITY CONTROL

A. Testing Agency: Engage a qualified testing agency to perform tests and inspections.

B. Testing Services: Testing and inspecting of composite samples of fresh concrete obtained according to ASTM C172/C172M will be performed according to the following requirements:

1. Testing Frequency: Obtain at least one composite sample for each 100 cu. yd. or fraction thereof of each concrete mixture placed each day.

    a. When frequency of testing will provide fewer than five compressive-strength tests for each concrete mixture, testing to be conducted from at least five randomly selected batches or from each batch if fewer than five are used.

2. Slump: ASTM C143/C143M; one test at point of placement for each composite sample, but not less than one test for each day's pour of each concrete mixture. Perform additional tests when concrete consistency appears to change.
3. Air Content: ASTM C231/C231M, pressure method; one test for each composite sample, but not less than one test for each day's pour of each concrete mixture.
4. Concrete Temperature: ASTM C1064/C1064M; one test hourly when air temperature is 40 deg F and below and when it is 80 deg F and above, and one test for each composite sample.
5. Compression Test Specimens: ASTM C31/C31M; cast and laboratory cure one set of three standard cylinder specimens for each composite sample.
6. Compressive-Strength Tests: ASTM C39/C39M; test one specimen at seven days and two specimens at 28 days.

    a. A compressive-strength test to be the average compressive strength from two specimens obtained from same composite sample and tested at 28 days.

C. Strength of each concrete mixture will be satisfactory if average of any three consecutive compressive-strength tests equals or exceeds specified compressive strength and no compressive-strength test value falls below specified compressive strength by more than 500 psi.

D. Test results to be reported in writing to Landscape Architect, concrete manufacturer, and Contractor within 48 hours of testing. Reports of compressive-strength tests to contain Project identification name and number, date of concrete placement, name of concrete testing and inspecting agency, location of concrete batch in Work, design compressive strength at 28 days, concrete mixture proportions and materials, compressive breaking strength, and type of break for both 7- and 28-day tests.

Copyright © 2022 by the American Institute of Architects. Warning: This AIA MasterSpec based document is protected by U.S. Copyright Law and International Treaties. A valid, current MasterSpec license is required for editing or use of this document.

E. Nondestructive Testing: Impact hammer, sonoscope, or other nondestructive device may be permitted by Landscape Architect but will not be used as sole basis for approval or rejection of concrete.

F. Additional Tests: Testing and inspecting agency will make additional tests of concrete when test results indicate that slump, air entrainment, compressive strengths, or other requirements have not been met, as directed by Landscape Architect.

G. Concrete paving will be considered defective if it does not pass tests and inspections.

H. Additional testing and inspecting, at Contractor's expense, will be performed to determine compliance of replaced or additional work with specified requirements.

I. Prepare test and inspection reports.

3.10 REPAIR AND PROTECTION

A. Remove and replace concrete paving that is broken, damaged, or defective or that does not comply with requirements in this Section. Remove work in complete sections from joint to joint unless otherwise approved by Landscape Architect.

B. Drill test cores, where directed by Landscape Architect, when necessary to determine magnitude of cracks or defective areas. Fill drilled core holes in satisfactory paving areas with portland cement concrete bonded to paving with epoxy adhesive.

C. Protect concrete paving from damage. Exclude traffic from paving for at least 14 days after placement. When construction traffic is permitted, maintain paving as clean as possible by removing surface stains and spillage of materials as they occur.

D. Maintain concrete paving free of stains, discoloration, dirt, and other foreign material. Sweep paving not more than two days before date scheduled for Substantial Completion inspections.

END OF SECTION 321313

Copyright © 2022 by the American Institute of Architects. Warning: This AIA MasterSpec based document is protected by U.S. Copyright Law and International Treaties. A valid, current MasterSpec license is required for editing or use of this document.

SECTION 321373 - CONCRETE PAVING JOINT SEALANTS

PART 1 - GENERAL

1.1 SUMMARY

A. Section Includes:

1. Cold-applied joint sealants.
2. Hot-applied joint sealants.
3. Joint-sealant backer materials.
4. Primers.

B. Related Requirements:

1. Section 033000 "Cast-in-Place Concrete" for general building applications of concrete.
2. Section 321313 "Concrete Paving" for cast-in-place concrete paving with other finishes, curbs and gutters, and stamped detectable warnings.

1.2 PREINSTALLATION MEETING

A. Preinstallation Conference: Conduct conference at Project site.

1.3 ACTION SUBMITTALS

A. Product Data:

1. Concrete pavement joint sealants.
2. Joint-sealant backer materials.

B. Samples for Initial Selection: Manufacturer's standard color sheets, showing full range of available colors for each type of joint sealant.

C. Samples for Verification: Actual sample of finished products for each kind and color of joint sealant required.

1. Size: Joint sealants in 1/2-inch- wide joints formed between two 6-inch- long strips of material matching the appearance of exposed surfaces adjacent to joint sealants.

D. Paving-Joint-Sealant Schedule: Include the following information:

1. Joint-sealant application, joint location, and designation.
2. Joint-sealant manufacturer and product name.
3. Joint-sealant formulation.
4. Joint-sealant color.

Copyright © 2022 by the American Institute of Architects. Warning: This AIA MasterSpec based document is protected by U.S. Copyright Law and International Treaties. A valid, current MasterSpec license is required for editing or use of this document.

1.4 INFORMATIONAL SUBMITTALS

A. Qualification Statements: For Installer.

1.5 QUALITY ASSURANCE

A. Qualifications:

1. Installers: Entity that employs installers and supervisors who are trained and approved by manufacturer.

1.6 PRECONSTRUCTION TESTING

A. Preconstruction Testing: Performed by a qualified testing agency.

1.7 FIELD CONDITIONS

A. Do not proceed with installation of joint sealants under the following conditions:

1. When ambient and substrate temperature conditions are outside limits permitted by joint-sealant manufacturer.
2. When joint substrates are wet.
3. Where joint widths are less than those allowed by joint-sealant manufacturer for applications indicated.
4. Where contaminants capable of interfering with adhesion have not yet been removed from joint substrates.

PART 2 - PRODUCTS

2.1 SOURCE LIMITATIONS

A. Obtain joint sealants from single manufacturer for each sealant type.

2.2 JOINT SEALANTS, GENERAL

A. Compatibility: Provide joint sealants, backer materials, and other related materials that are compatible with one another and with joint substrates under conditions of service and application, as demonstrated by joint-sealant manufacturer, based on testing and field experience.

2.3 COLD-APPLIED JOINT SEALANTS

A. Multicomponent, Nonsag, Urethane, Elastomeric Joint Sealant: ASTM C920, Type M, Grade NS, Class 25, for Use T.

Copyright © 2022 by the American Institute of Architects. Warning: This AIA MasterSpec based document is protected by U.S. Copyright Law and International Treaties. A valid, current MasterSpec license is required for editing or use of this document.

2.4 HOT-APPLIED JOINT SEALANTS

A. Hot-Applied, Single-Component Joint Sealant, Type I: ASTM D6690.

B. Hot-Applied, Single-Component Joint Sealant, Type I or Type II: ASTM D6690.

C. Hot-Applied, Single-Component Joint Sealant, Type I, II, or III: ASTM D6690.

D. Hot-Applied, Single-Component Joint Sealant, Type IV: ASTM D6690.

2.5 JOINT-SEALANT BACKER MATERIALS

A. Joint-Sealant Backer Materials: Nonstaining; compatible with joint substrates, sealants, primers, and other joint fillers; and approved for applications indicated by joint-sealant manufacturer, based on field experience and laboratory testing.

B. Round Backer Rods for Cold- and Hot-Applied Joint Sealants: ASTM D5249, Type 1, of diameter and density required to control sealant depth and prevent bottom-side adhesion of sealant.

C. Round Backer Rods for Cold-Applied Joint Sealants: ASTM D5249, Type 3, of diameter and density required to control joint-sealant depth and prevent bottom-side adhesion of sealant.

D. Backer Strips for Cold- and Hot-Applied Joint Sealants: ASTM D5249; Type 2; of thickness and width required to control joint-sealant depth, prevent bottom-side adhesion of sealant, and fill remainder of joint opening under sealant.

2.6 PRIMERS

A. Primers: Product recommended by joint-sealant manufacturer where required for adhesion of sealant to joint substrates indicated.

PART 3 - EXECUTION

3.1 EXAMINATION

A. Examine joints to receive joint sealants, with Installer present, for compliance with requirements for joint configuration, installation tolerances, and other conditions affecting joint-sealant performance.

B. Proceed with installation only after unsatisfactory conditions have been corrected.

3.2 PREPARATION

A. Surface Cleaning of Joints: Before installing joint sealants, clean out joints immediately to comply with joint-sealant manufacturer's written instructions.

Copyright © 2022 by the American Institute of Architects. Warning: This AIA MasterSpec based document is protected by U.S. Copyright Law and International Treaties. A valid, current MasterSpec license is required for editing or use of this document.

1. Remove all foreign material from joint substrates that could interfere with adhesion of joint sealant, including dust, old joint sealants, oil, grease, waterproofing, water repellents, water, surface dirt, and frost.

B. Joint Priming: Prime joint substrates where indicated or where recommended in writing by joint-sealant manufacturer, based on preconstruction joint-sealant-substrate tests or prior experience. Apply primer to comply with joint-sealant manufacturer's written instructions. Confine primers to areas of joint-sealant bond; do not allow spillage or migration onto adjoining surfaces.

3.3 INSTALLATION OF JOINT SEALANTS

A. Comply with joint-sealant manufacturer's written installation instructions for products and applications indicated unless more stringent requirements apply.

B. Joint-Sealant Installation Standard: Comply with recommendations in ASTM C1193 for use of joint sealants as applicable to materials, applications, and conditions.

C. Install joint-sealant backers to support joint sealants during application and at position required to produce cross-sectional shapes and depths of installed sealants relative to joint widths that allow optimum sealant movement capability.

1. Do not leave gaps between ends of joint-sealant backer materials.
2. Do not stretch, twist, puncture, or tear joint-sealant backer materials.
3. Remove absorbent joint-sealant backer materials that have become wet before sealant application and replace them with dry materials.

D. Install joint sealants immediately following backer material installation, using proven techniques that comply with the following:

1. Place joint sealants so they fully contact joint substrates.
2. Completely fill recesses in each joint configuration.
3. Produce uniform, cross-sectional shapes and depths relative to joint widths that allow optimum sealant movement capability.

E. Tooling of Nonsag Joint Sealants: Immediately after joint-sealant application and before skinning or curing begins, tool sealants in accordance with the following requirements to form smooth, uniform beads of configuration indicated; to eliminate air pockets; and to ensure contact and adhesion of sealant with sides of joint:

1. Remove excess joint sealant from surfaces adjacent to joints.
2. Use tooling agents that are approved in writing by joint-sealant manufacturer and that do not discolor sealants or adjacent surfaces.

F. Provide joint configuration to comply with joint-sealant manufacturer's written instructions unless otherwise indicated.

Copyright © 2022 by the American Institute of Architects. Warning: This AIA MasterSpec based document is protected by U.S. Copyright Law and International Treaties. A valid, current MasterSpec license is required for editing or use of this document.

3.4 CLEANING AND PROTECTION

A. Clean off excess joint sealant as the Work progresses, by methods and with cleaning materials approved in writing by joint-sealant manufacturers.

B. Protect joint sealants, during and after curing period, from contact with contaminating substances and from damage resulting from construction operations or other causes so sealants are without deterioration or damage at time of Substantial Completion. If, despite such protection, damage or deterioration occurs, cut out and remove damaged or deteriorated joint sealants immediately and replace with joint sealant so installations in repaired areas are indistinguishable from the original work.

3.5 PAVING-JOINT-SEALANT SCHEDULE

A. Joints within concrete paving:

1. Joint Location:

   a. Expansion and isolation joints in concrete paving.
   b. Contraction joints in concrete paving.
   c. Other joints as indicated.

2. Joint Sealant: Multicomponent, Nonsag, Urethane, Elastomeric Joint Sealant: ASTM C920, Type M, Grade NS, Class 25, for Use T.
3. Joint-Sealant Color: Match adjacent pavement. Manufacturer's standard.

B. Joints within concrete paving and between concrete and asphalt paving:

1. Joint Location:

   a. Joints between concrete and asphalt paving.
   b. Joints between concrete curbs and asphalt paving.
   c. Other joints as indicated.

2. Joint Sealant: Hot-applied, single-component joint sealant.
3. Joint-Sealant Color: Manufacturer's standard.

END OF SECTION 321373

Copyright © 2022 by the American Institute of Architects. Warning: This AIA MasterSpec based document is protected by U.S. Copyright Law and International Treaties. A valid, current MasterSpec license is required for editing or use of this document.

SECTION 321816.13 - PLAYGROUND PROTECTIVE SURFACING

PART 1 - GENERAL

1.1 RELATED DOCUMENTS

A. Drawings and general provisions of the Contract, including General and Supplementary Conditions and Division 01 Specification Sections, apply to this Section.

1.2 SUMMARY

A. Section Includes:

1. Unitary, seamless surfacing.
2. Organic loose-fill surfacing.

1.3 DEFINITIONS

A. Definitions in ASTM F2223 apply to Work of this Section.

B. Critical Height: Standard measure of shock attenuation according to ASTM F2223; same as "critical fall height" in ASTM F1292. According to ASTM F1292, this approximates "the maximum fall height from which a life-threatening head injury would not be expected to occur."

C. SBR: Styrene-butadiene rubber.

D. Unitary Surfacing: A protective surfacing of one or more material components bound together to form a continuous surface; same as "unitary system" in ASTM F2223.

1.4 ACTION SUBMITTALS

A. Product Data: For each type of product.

B. Shop Drawings: For each type of protective surfacing.

1. Include plans, sections, placement and penetration details, and attachment to substrates.
2. Include accessories and edge terminations.
3. Include patterns made by varying colors of surfacing and details of graphics.
4. Include fall heights and use zones for equipment and structures specified in Section 116800 "Play Field Equipment and Structures," coordinated with the critical heights for protective surfacing.

C. Samples for Initial Selection: For each type of exposed finish.

1. Include Samples of accessories involving color selection.

Copyright © 2022 by the American Institute of Architects. Warning: This AIA MasterSpec based document is protected by U.S. Copyright Law and International Treaties. A valid, current MasterSpec license is required for editing or use of this document.

D. Samples for Verification: For each type of protective surfacing and exposed finish.

1. Include Samples of accessories to verify color and finish selection.
2. Unitary, Seamless Surfacing: Minimum 6 by 6 inches.
3. Loose-Fill Surfacing: Minimum 1 quart.
4. Drainage/Separation Geotextile: Minimum 12 by 12 inches.

E. Product Schedule: For protective surfacing. Use same designations indicated on Drawings.

1.5 INFORMATIONAL SUBMITTALS

A. Qualification Data: For Installer and testing agency.

B. Material Certificates: For each type of loose-fill surfacing.

C. Product Certificates: For each type of unitary surfacing product.

D. Field quality-control reports.

E. Sample Warranty: For manufacturer's special warranty.

1.6 CLOSEOUT SUBMITTALS

A. Maintenance Data: For playground protective surfacing to include in maintenance manuals.

1.7 MAINTENANCE MATERIAL SUBMITTALS

A. Furnish extra materials, from the same product run, that match products installed and that are packaged with protective covering for storage and identified with labels describing contents.

1. Loose Fill: Amount equal to 1 percent of amount installed, but no fewer than 3 units

1.8 QUALITY ASSURANCE

A. Installer Qualifications: An entity that employs installers and supervisors who are trained and approved by manufacturer.

B. Mockups: Build mockups to verify selections made under Sample submittals and to set quality standards for materials and execution.

1. Build mockups for protective surfacing including accessories.

a. Size: 48 inches by 48 inches.

2. Approval of mockups does not constitute approval of deviations from the Contract Documents contained in mockups unless Landscape Architect specifically approves such deviations in writing.

Copyright © 2022 by the American Institute of Architects. Warning: This AIA MasterSpec based document is protected by U.S. Copyright Law and International Treaties. A valid, current MasterSpec license is required for editing or use of this document.

3. Subject to compliance with requirements, approved mockups may become part of the completed Work if undisturbed at time of Substantial Completion.

1.9 WARRANTY

A. Special Warranty: Manufacturer and Installer agree to repair or replace components of protective surfacing that fail in materials or workmanship within specified warranty period.

1. Failures include, but are not limited to, the following:

a. Reduction in impact attenuation as measured by reduction of critical fall height.
b. Deterioration of protective surfacing and other materials beyond normal weathering.

2. Warranty Period: Ten years from date of Substantial Completion.

PART 2 - PRODUCTS

2.1 MANUFACTURERS

A. Source Limitations: Obtain protective surfacing materials from single source from single manufacturer.

1. Provide geosynthetic accessories of each type from source recommended by manufacturer of protective surfacing materials.

2.2 PERFORMANCE REQUIREMENTS

A. Impact Attenuation: Critical fall height tested according to ASTM F1292.

B. Accessibility Standard: Minimum surfacing performance according to ASTM F1951.

2.3 UNITARY, SEAMLESS SURFACING

A. Description: Manufacturer's standard, site-mixed and applied, single-layer material in thickness as required, tested for impact attenuation according to ASTM F1292 and for accessibility according to ASTM F1951.

1. Composition: Blend of recycled SBR and EPDM rubber, particles and binder, forming a wearing and cushioning product.
2. Binder: Weather-resistant, UV-stabilized, flexible, nonhardening, 100 percent solids polyurethane.
3. Critical Height: As indicated on Drawings.
4. Overall Thickness: Not less than as required for critical height indicated as indicated on Drawings.
5. Primer/Adhesive: Manufacturer's standard primer and weather-resistant, moisture-cured polyurethane adhesive suitable for unit, substrate, and location.

Copyright © 2022 by the American Institute of Architects. Warning: This AIA MasterSpec based document is protected by U.S. Copyright Law and International Treaties. A valid, current MasterSpec license is required for editing or use of this document.

6. Color(s): As selected by Landscape Architect from manufacturer's full range.

B. Leveling and Patching Material: Portland cement-based grout or epoxy- or polyurethane-based formulation suitable for exterior use and approved by protective surfacing manufacturer.

2.4 ORGANIC LOOSE-FILL SURFACING

A. Engineered Wood Fiber: ASTM F2075; containing no bark, leaves, twigs, or foreign or toxic materials; tested for accessibility according to ASTM F1951.

1. Critical Height: As indicated on Drawings.
2. Uncompressed Material Depth: Not less than as required for critical height indicated as indicated on Drawings.

2.5 GEOSYNTHETIC ACCESSORIES

A. Drainage/Separation Geotextiles: Comply with Section 312000 "Earth Moving."

B. Drainage/Separation Geotextile: Nonwoven, needle-punched geotextile, manufactured for drainage applications and made from polyolefins or polyesters; with the following minimum properties:

1. Weight: 4 oz./sq. yd.; ASTM D5261.
2. Water Flow Rate: 100 gpm/sq. ft. according to ASTM D4491.

PART 3 - EXECUTION

3.1 EXAMINATION

A. Examine substrates, areas, and conditions, with Installer present, for compliance with requirements for subgrade elevations, slope, and drainage and for other conditions affecting performance of the Work.

1. Verify that substrates are sound and without high spots, ridges, holes, and depressions.

B. Proceed with installation only after unsatisfactory conditions have been corrected.

3.2 PREPARATION

A. Prepare substrates to receive surfacing products according to protective surfacing manufacturer's written instructions.

Copyright © 2022 by the American Institute of Architects. Warning: This AIA MasterSpec based document is protected by U.S. Copyright Law and International Treaties. A valid, current MasterSpec license is required for editing or use of this document.

3.3 INSTALLATION OF GEOSYNTHETIC ACCESSORIES

A. Install geosynthetic accessories before edging and according to playground surface system manufacturer's and geosynthetic manufacturer's written instructions and in a manner that cannot become a tripping hazard.

1. Drainage/Separation Geotextile: Completely cover area beneath protective surfacing, overlapping geotextile sides and edges a minimum of with manufacturer's standard treatment for seams.

3.4 INSTALLATION OF SEAMLESS SURFACING

A. Mix and apply components of seamless surfacing according to manufacturer's written instructions to produce uniform, monolithic, and impact-attenuating protective surfacing of required overall thickness.

1. Substrate Primer: Apply over prepared substrate at manufacturer's standard spreading rate for type of substrate.
2. Poured Cushioning Layer: Spread evenly over primed substrate to form a uniform layer applied at manufacturer's standard spreading rate in one continuous operation, with a minimum of cold joints.
3. Intercoat Primer: Over cured cushioning layer, apply primer at manufacturer's standard spreading rate.
4. Wearing Layer: Spread over primed base course to form a uniform layer applied at manufacturer's standard spreading rate in one continuous operation and, except where color changes, with no cold joints. Finish surface to produce manufacturer's standard wearing-surface texture.

    a. Design: Where colored pattern is required, place colored, design material as soon as previously placed material is sufficiently cured, using primer or adhesive if required by manufacturer's written instructions.

5. Lacquer Topcoat: Spray or roller applied at manufacturer's standard coating rate in one continuous operation.
6. Edge Treatment: As indicated on Drawings. Fully adhere edges to substrate with full coverage of substrate. Maintain fully cushioned thickness required to comply with performance requirements.

3.5 INSTALLATION OF LOOSE-FILL SURFACING

A. Apply components of loose-fill surfacing according to manufacturer's written instructions to produce a uniform surface.

B. Edging: Place and permanently secure edging in place, and attach units to each other.

C. Loose Fill: Place loose-fill materials to required depth after installation of playground equipment support posts and foundations. Include manufacturer's recommended amount of additional material to offset natural compaction over time.

Copyright © 2022 by the American Institute of Architects. Warning: This AIA MasterSpec based document is protected by U.S. Copyright Law and International Treaties. A valid, current MasterSpec license is required for editing or use of this document.

D. Grading: Uniformly grade loose fill to an even surface free from irregularities.

E. Compaction: After initial grading, mechanically compact loose fill before finish grading.

F. Finish Grading: Hand rake to a uniformly smooth finished surface and to required elevations.

3.6 FIELD QUALITY CONTROL

A. Testing Agency: Engage a qualified testing agency to perform tests.

B. Perform the following tests:

1. Perform "Installed Surface Performance Test" according to ASTM F1292 for each protective surfacing type and thickness in each playground area.
2. Perform installed-surface-performance tests at no less than one series of tests for each 1000 sq. ft. of each type and thickness of in-place protective surfacing or part thereof.

C. Playground protective surfacing will be considered defective if it does not pass tests.

D. Prepare test reports.

3.7 PROTECTION

A. Prevent traffic over seamless surfacing for not less than 48 hours after installation.

END OF SECTION 321816.13

Copyright © 2022 by the American Institute of Architects. Warning: This AIA MasterSpec based document is protected by U.S. Copyright Law and International Treaties. A valid, current MasterSpec license is required for editing or use of this document.

SECTION 323119 - DECORATIVE METAL FENCES AND GATES

PART 1 - GENERAL

1.1 RELATED DOCUMENTS

A. Drawings and general provisions of the Contract, including General and Supplementary Conditions and Division 01 Specification Sections, apply to this Section.

1.2 SUMMARY

A. Section Includes:

1. Decorative metallic-coated-steel tubular picket fences.
2. Swing gates.

B. Related Requirements:

1. Section 033000 “Cast-In-Place Concrete” for pilasters.

1.3 PREINSTALLATION MEETINGS

A. Preinstallation Conference: Conduct conference at Project site.

1.4 ACTION SUBMITTALS

A. Product Data: For each type of product.

B. Shop Drawings: For fencing and gates.

1. Include plans, elevations, sections, gate locations, post spacing, and mounting attachment details, and grounding details.

C. Samples: For each fence material and for each color specified.

1. Provide Samples 12 inches in length for linear materials.

1.5 INFORMATIONAL SUBMITTALS

A. Field quality-control reports.

B. Product Test Reports: For decorative metallic-coated-steel tubular picket fences, including finish, indicating compliance with referenced standard and other specified requirements.

Copyright © 2022 by the American Institute of Landscape Architects. Warning: This AIA MasterSpec based document is protected by U.S. Copyright Law and International Treaties. A valid, current MasterSpec license is required for editing or use of this document.

1.6 QUALITY ASSURANCE

A. Installer Qualifications: Fabricator of products.

B. Mockups: Build mockups to verify selections made under Sample submittals, to demonstrate aesthetic effects, and to set quality standards for fabrication and installation.

1. Include 10-foot length of fence complying with requirements.
2. Subject to compliance with requirements, approved mockups may become part of the completed Work if undisturbed at time of Substantial Completion.

PART 2 - PRODUCTS

2.1 PERFORMANCE REQUIREMENTS

A. Wind Loading:

1. Fence Height: 5 feet.
2. Engineering: Provide fence system engineering by the manufacturer, including posts, footings, and anchorage, designed for the project conditions and in accordance with the applicable building code.

B. Lightning-Protection System: Maximum grounding-resistance value of 25 ohms under normal dry conditions.

2.2 DECORATIVE METALLIC-COATED-STEEL TUBULAR PICKET FENCES

A. Decorative Metallic-Coated-Steel Tubular Picket Fences: Comply with ASTM F2408 for light-industrial (commercial) application (class) unless otherwise indicated.

B. Posts:
1. Posts at Swing Gate Openings: Square tubes 2-1/2 by 2-1/2 inches formed from 0.108-inch nominal-thickness, metallic-coated steel sheet or formed from 0.105-inch nominal-thickness steel sheet and hot-dip galvanized after fabrication.

C. Post Caps: Aluminum castings.

D. Rails: Per manufacturer's standard.

1. Size: 1-1/2 by 1-1/2 inches.
2. Metal and Thickness: 0.079-inch nominal-thickness, metallic-coated steel sheet or 0.075-inch nominal-thickness, uncoated steel sheet, hot-dip galvanized after fabrication.

E. Pickets: Square tubes.

1. Terminate tops of pickets at top rail, as indicated on Drawings.
2. Picket Spacing: 8' maximum o.c., as indicated on Drawings.

Copyright © 2022 by the American Institute of Landscape Architects. Warning: This AIA MasterSpec based document is protected by U.S. Copyright Law and International Treaties. A valid, current MasterSpec license is required for editing or use of this document.

F. Fasteners: Manufacturer's standard tamperproof, corrosion-resistant, color-coated fasteners matching fence components with resilient polymer washers.

G. Metallic-Coated Steel Sheet: Galvanized-steel sheet or aluminum-zinc, alloy-coated steel sheet.

H. Interior surface of tubes formed from uncoated steel sheet shall be hot-dip zinc coated same as exterior or coated with zinc-rich thermosetting coating to comply with ASTM F2408.

I. Galvanizing: For components indicated to be galvanized and for which galvanized coating is not specified in ASTM F2408, hot-dip galvanize to comply with ASTM A123/A123M. For hardware items, hot-dip galvanize to comply with ASTM A153/A153M.

J. Finish: Organic coating complying with requirements in ASTM F2408 Powder coating.

2.3 SWING GATES

A. Gate Configuration: As indicated.

B. Gate Frame Height: As indicated.

C. Gate Opening Width: As indicated.

D. Steel Frames and Bracing: Fabricate members from square steel tubing with wall thickness. Hot-dip galvanize frames after fabrication.

E. Frame Corner Construction: Welded or assembled with corner fittings.

F. Additional Rails: Provide as indicated, complying with requirements for fence rails.

G. Infill: Comply with requirements for adjacent fence.

H. Picket Size, Configuration, and Spacing: Comply with requirements for adjacent fence.

1. Treillage: Provide iron castings of pattern indicated between each pair of pickets. Finish as specified for adjacent fence.

I. Hardware: Latches permitting operation from both sides of gate, hinges, and keepers for each gate leaf more than 5 feet wide. Provide center gate stops and cane bolts for pairs of gates. Fabricate latches with integral eye openings for padlocking; padlock accessible from both sides of gate.

J. Spring Hinges: BHMA A156.17, Grade 1, suitable for exterior use.

1. Function: 321 - Gate spring pivot hinge. Fixed tension.
2. Material: Malleable iron; galvanized.

K. Hinges: BHMA A156.1, Grade 1, suitable for exterior use.

1. Function: 39 - Full surface, triple weight, antifriction bearing.
2. Material: Wrought steel, forged steel, cast steel, or malleable iron; galvanized.

Copyright © 2022 by the American Institute of Landscape Architects. Warning: This AIA MasterSpec based document is protected by U.S. Copyright Law and International Treaties. A valid, current MasterSpec license is required for editing or use of this document.

L. Cane Bolts: Provide for inactive leaf of pairs of gates. Fabricated from diameter, round steel bars, hot-dip galvanized after fabrication. Finish to match gates. Provide galvanized-steel pipe strikes to receive cane bolts in closed position.

M. Finish exposed welds to comply with NOMMA Guideline 1, Finish #2 - completely sanded joint, some undercutting and pinholes okay.

N. Galvanizing: For items other than hardware that are indicated to be galvanized, hot-dip galvanize to comply with ASTM A123/A123M. For hardware items, hot-dip galvanize to comply with ASTM A153/A153M.

O. Steel Finish: Powder coat.

2.4 STEEL AND IRON

A. Plates, Shapes, and Bars: ASTM A36/A36M.

B. Tubing: ASTM A500/A500M, cold-formed steel tubing.

C. Grade 45 or cold-rolled steel sheet, ASTM A1008/A1008M, Structural Steel, Grade 50.

D. Galvanized-Steel Sheet: ASTM A653/A653M, structural quality, Grade 50, with G90 coating.

E. Castings: Either gray or malleable iron unless otherwise indicated.

1. Gray Iron: ASTM A48/A48M, Class 30.
2. Malleable Iron: ASTM A47/A47M.

2.5 COATING MATERIALS

A. Shop Primer for Steel: Manufacturer's standard lead- and chromate-free, nonasphaltic, rust-inhibiting primer complying with MPI#79 and compatible with topcoat.

B. Epoxy Zinc-Rich Primer for Uncoated Steel: Complying with MPI #20 and compatible with coating specified to be applied over it.

C. Epoxy Primer for Galvanized Steel: Epoxy primer recommended in writing by topcoat manufacturer.

D. Epoxy Intermediate Coat for Uncoated Steel: Complying with MPI #77 and compatible with primer and topcoat.

E. Intermediate Coat for Uncoated Steel: Epoxy or polyurethane intermediate recommended in writing by primer and topcoat manufacturer.

F. Polyurethane Intermediate Coat and Topcoat: Complying with MPI #72 and compatible with undercoat.

Copyright © 2022 by the American Institute of Landscape Architects. Warning: This AIA MasterSpec based document is protected by U.S. Copyright Law and International Treaties. A valid, current MasterSpec license is required for editing or use of this document.

2.6 MISCELLANEOUS MATERIALS

A. Welding Rods and Bare Electrodes: Select according to AWS specifications for metal alloy welded.

B. Concrete: Normal-weight, air-entrained, ready-mix concrete complying with requirements in Section 033000 "Cast-in-Place Concrete" with a minimum 28-day compressive strength of 3000 psi, 3-inch slump, and 1-inch maximum aggregate size.

C. Nonshrink Grout: Factory-packaged, nonstaining, noncorrosive, nongaseous grout complying with ASTM C1107/C1107M and specifically recommended by manufacturer for exterior applications.

2.7 STEEL FINISHES

A. Surface Preparation: Clean surfaces according to SPC-SP 6/NACE No. 3, "Commercial Blast Cleaning." After cleaning, apply a conversion coating compatible with the organic coating to be applied over it.

B. Powder Coating: Immediately after cleaning, apply manufacturer's standard two-coat finish consisting of epoxy primer and TGIC polyester topcoat to a minimum total dry film thickness of not less than 8 mils. Comply with coating manufacturer's written instructions.

1. Color and Gloss: As selected by Landscape Architect from manufacturer's full range.

C. Primer Application: Apply zinc-rich epoxy primer immediately after cleaning, to provide a minimum dry film thickness of 2 mils per applied coat, to surfaces that are exposed after assembly and installation, and to concealed surfaces.

D. High-Performance Coating: Apply intermediate and polyurethane topcoats to prime-coated surfaces. Comply with coating manufacturer's written instructions and with requirements in SSPC-PA 1, "Paint Application Specification No. 1: Shop, Field, and Maintenance Painting of Steel," for shop painting. Apply at spreading rates recommended by coating manufacturer.

1. Match approved Samples for color, texture, and coverage. Remove and refinish, or recoat work that does not comply with specified requirements.

2.8 METALLIC-COATED-STEEL FINISHES

A. Galvanized Finish: Clean welds, mechanical connections, and abraded areas and repair galvanizing to comply with ASTM A780/A780M.

B. Surface Preparation: Clean surfaces of oil and other contaminants. Use cleaning methods that do not leave residue. After cleaning, apply a zinc-phosphate conversion coating compatible with the organic coating to be applied over it. Clean welds, mechanical connections, and abraded areas and apply galvanizing repair paint, complying with SSPC-Paint 20, to comply with ASTM A780/A780M.

C. Powder Coating: Immediately after cleaning and pretreating, apply manufacturer's standard two-coat finish consisting of zinc-rich epoxy prime coat and TGIC polyester topcoat to a

Copyright © 2022 by the American Institute of Landscape Architects. Warning: This AIA MasterSpec based document is protected by U.S. Copyright Law and International Treaties. A valid, current MasterSpec license is required for editing or use of this document.

minimum dry film thickness of 2 mils. Comply with coating manufacturer's written instructions to achieve a minimum total dry film thickness of 4 mils.

1. Color and Gloss: As selected by Landscape Architect from manufacturer's full range.
2. Comply with surface finish testing requirements in ASTM F2408 except change corrosion-resistance requirement to 3000 hours without failure.

D. High-Performance Coating: Apply epoxy primer, polyurethane intermediate coat, and polyurethane topcoat to prepared surfaces. Comply with coating manufacturer's written instructions and with requirements in SSPC-PA 1, "Paint Application Specification No. 1: Shop, Field, and Maintenance Painting of Steel," for shop painting. Apply at spreading rates recommended by coating manufacturer.

1. Match approved Samples for color, texture, and coverage. Remove and refinish, or recoat work that does not comply with specified requirements.

PART 3 - EXECUTION

3.1 EXAMINATION

A. Examine areas and conditions, with Installer present, for compliance with requirements for site clearing, earthwork, pavement work, construction layout, and other conditions affecting performance of the Work.

B. Do not begin installation before final grading is completed unless otherwise permitted by Landscape Architect.

C. Proceed with installation only after unsatisfactory conditions have been corrected.

3.2 PREPARATION

A. Stake locations of fence lines, gates, and terminal posts. Do not exceed intervals of 500 feet or line of sight between stakes. Indicate locations of utilities, lawn sprinkler system, underground structures, benchmarks, and property monuments.

3.3 DECORATIVE FENCE INSTALLATION

A. Install fences according to manufacturer's written instructions.

B. Install fences by setting posts as indicated and fastening rails and infill panels to posts. Peen threads of bolts after assembly to prevent removal.

C. Post Excavation: Drill or hand-excavate holes for posts in firm, undisturbed soil. Excavate holes to a diameter of not less than 4 times post size and a depth of not less than 24 inches plus 3 inches for each foot or fraction of a foot that fence height exceeds 4 feet.

D. Post Setting: Set posts in concrete at indicated spacing into firm, undisturbed soil.

Copyright © 2022 by the American Institute of Landscape Architects. Warning: This AIA MasterSpec based document is protected by U.S. Copyright Law and International Treaties. A valid, current MasterSpec license is required for editing or use of this document.

1. Verify that posts are set plumb, aligned, and at correct height and spacing, and hold in position during setting with concrete or mechanical devices.
2. Concrete Fill: Place concrete around posts and vibrate or tamp for consolidation. Protect aboveground portion of posts from concrete splatter.

    a. Exposed Concrete: Extend 2 inches above grade. Finish and slope top surface to drain water away from post.
    b. Concealed Concrete: Top below grade as indicated on Drawings to allow covering with surface material. Slope top surface of concrete to drain water away from post.

3. Posts Set in Concrete: Extend post to within 6 inches of specified excavation depth, but not closer than 3 inches to bottom of concrete.
4. Space posts uniformly at 8 feet o.c.

3.4 GATE INSTALLATION

A. Install gates according to manufacturer's written instructions, level, plumb, and secure for full opening without interference. Attach hardware using tamper-resistant or concealed means. Install ground-set items in concrete for anchorage. Adjust hardware for smooth operation and lubricate where necessary.

3.5 FIELD QUALITY CONTROL

A. Testing Agency: Engage a qualified testing agency to perform tests and inspections.

1. Grounding-Resistance Tests: Subject completed grounding system to a megger test at each grounding location. Measure grounding resistance not less than two full days after last trace of precipitation, without soil having been moistened by any means other than natural drainage or seepage and without chemical treatment or other artificial means of reducing natural grounding resistance. Perform tests by two-point method according to IEEE 81.
2. Excessive Grounding Resistance: If resistance to grounding exceeds specified value, notify Landscape Architect promptly. Include recommendations for reducing grounding resistance and a proposal to accomplish recommended work.
3. Report: Prepare test reports of grounding resistance at each test location certified by a testing agency. Include observations of weather and other phenomena that may affect test results.

3.6 ADJUSTING

A. Gates: Adjust gates to operate smoothly, easily, and quietly, free of binding, warp, excessive deflection, distortion, nonalignment, misplacement, disruption, or malfunction, throughout entire operational range. Confirm that latches and locks engage accurately and securely without forcing or binding.

B. Lubricate hardware and other moving parts.

Copyright © 2022 by the American Institute of Landscape Architects. Warning: This AIA MasterSpec based document is protected by U.S. Copyright Law and International Treaties. A valid, current MasterSpec license is required for editing or use of this document.

3.7 DEMONSTRATION

A. Train District's personnel to adjust, operate, and maintain gates.

END OF SECTION 323119

Copyright © 2022 by the American Institute of Landscape Architects. Warning: This AIA MasterSpec based document is protected by U.S. Copyright Law and International Treaties. A valid, current MasterSpec license is required for editing or use of this document.

SECTION 323300 - SITE FURNISHINGS

PART 1 - GENERAL

1.1 RELATED DOCUMENTS

A. Drawings and general provisions of the Contract, including General and Supplementary Conditions and Division 01 Specification Sections, apply to this Section.

1.2 SUMMARY

A. Section Includes:

1. Benches.
2. Picnic Tables.
3. BBQ.
4. Park Sign.
5. Trash / Recycling Receptacles.
6. Bike Racks / Bike Lockers.
7. Pet Station.
8. Drinking Fountains.
9. Shade Structure (Garden)
10. Shade Structure (Picnic).
11. Shade Structure (Amphitheater).
12. Interpretive Signage.
13. Removable Bollard.
14. Exercise Equipment.

B. Related Requirements:

1. Section 033000 "Cast-in-Place Concrete" for installing pipe sleeves cast installing anchor bolts cast formed voids in concrete footings.
2. Section 312000 "Earth Moving" for excavation for installing concrete footings.

1.3 ACTION SUBMITTALS

A. Product Data: For each type of product.

B. Samples: For each exposed product and for each color and texture specified.

C. Samples for Initial Selection: For units with factory-applied finishes.

D. Samples for Verification: For each type of exposed finish, not less than 6-inch- long linear components and 4-inch- square sheet components.

1. Include full-size Samples of bench, table, bicycle rack trash receptacle. Approved samples may be incorporated into the Work.

Copyright © 2022 by the American Institute of Architects. Warning: This AIA MasterSpec based document is protected by U.S. Copyright Law and International Treaties. A valid, current MasterSpec license is required for editing or use of this document.

E. Product Schedule: For site furnishings. Use same designations indicated on Drawings.

1.4 INFORMATIONAL SUBMITTALS

A. Material Certificates: For site furnishings manufactured with preservative-treated wood.

1. Indicate type of preservative used and net amount of preservative retained. For products receiving a waterborne treatment, include statement that moisture content of treated materials was reduced to levels specified before shipment to Project site.

1.5 CLOSEOUT SUBMITTALS

A. Maintenance Data: For site furnishings to include in maintenance manuals.

1.6 MAINTENANCE MATERIAL SUBMITTALS

A. Furnish extra materials that match products installed and that are packaged with protective covering for storage and identified with labels describing contents.

1. Trash Receptacle Inner Containers: Five full-size units for each size indicated, but no fewer than two units.

PART 2 - PRODUCTS

2.1 BENCHES

A. Basis-of-Design: Subject to compliance with requirements, provide the following products or approved equal:

1. Manufacturer: Outdoor Creations or approved equal
2. Model: As indicated on Drawings
3. Color: As indicated on Drawings

2.2 PICNIC TABLES

A. Basis-of-Design: Subject to compliance with requirements, provide the following products or approved equal:

1. Manufacturer: Outdoor Creations or approved equal
2. Model: As indicated on Drawings
3. Color: As indicated on Drawings

Copyright © 2022 by the American Institute of Architects. Warning: This AIA MasterSpec based document is protected by U.S. Copyright Law and International Treaties. A valid, current MasterSpec license is required for editing or use of this document.

2.3 BBQ

A. Basis-of-Design: Subject to compliance with requirements, provide the following products or approved equal:

1. Manufacturer: Outdoor Creations or approved equal
2. Model: As indicated on Drawings
3. Color: As indicated on Drawings

2.4 PARK SIGN

A. Basis-of-Design: Subject to compliance with requirements, provide the following products or approved equal:

1. Manufacturer: Outdoor Creations or approved equal
2. Model: As indicated on Drawings
3. Color: As indicated on Drawings

2.5 TRASH & RECYCLING RECPTACLES

A. Basis-of-Design: Subject to compliance with requirements, provide the following products or approved equal:

1. Manufacturer: Bearsaver or approved equal
2. Model: As indicated on Drawings
3. Color: As indicated on Drawings

2.6 BIKE RACKS/ BIKE LOCKERS

A. Basis-of-Design: Subject to compliance with requirements, provide the following products or approved equal:

1. Manufacturer: Dumor or approved equal
2. Model: As indicated on Drawings
3. Color: As indicated on Drawings

2.7 PET STATION

A. Basis-of-Design: Subject to compliance with requirements, provide the following products or approved equal:

1. Manufacturer: Dog-I-Pot or approved equal
2. Model: As indicated on Drawings
3. Color: As indicated on Drawings

Copyright © 2022 by the American Institute of Architects. Warning: This AIA MasterSpec based document is protected by U.S. Copyright Law and International Treaties. A valid, current MasterSpec license is required for editing or use of this document.

2.8 DRINKING FOUNTAINS

A. Basis-of-Design: Subject to compliance with requirements, provide the following products or approved equal:

1. Manufacturer: Most Dependable Fountains or approved equal
2. Model: As indicated on Drawings
3. Color: As indicated on Drawings

2.9 SHADE STRUCTURE AT COMMUNITY GARDEN

A. Basis-of-Design: Subject to compliance with requirements, provide the following products or approved equal:

1. Manufacturer: Poligon or approved equal
2. Model: As indicated on Drawings
3. Color: As indicated on Drawings

2.10 SHADE STRUCTURE AT PICNIC AREA

A. Basis-of-Design: Subject to compliance with requirements, provide the following products or approved equal:

1. Manufacturer: Poligon or approved equal
2. Model: As indicated on Drawings
3. Color: As indicated on Drawings

2.11 SHADE STRUCTURE AT AMPHITHEATER

A. Basis-of-Design: Subject to compliance with requirements, provide the following products or approved equal:

1. Manufacturer: Poligon or approved equal
2. Model: As indicated on Drawings
3. Color: As indicated on Drawings

2.12 INTERPRETIVE SIGNAGE

A. Basis-of-Design: Subject to compliance with requirements, provide the following products or approved equal:

1. Manufacturer: As indicated on Drawings
2. Model: As indicated on Drawings
3. Color: As indicated on Drawings

Copyright © 2022 by the American Institute of Architects. Warning: This AIA MasterSpec based document is protected by U.S. Copyright Law and International Treaties. A valid, current MasterSpec license is required for editing or use of this document.

2.13 REMOVABLE BOLLARDS

A. Basis-of-Design: Subject to compliance with requirements, provide the following products or approved equal:

1. Manufacturer: As indicated on Drawings
2. Model: As indicated on Drawings
3. Color: As indicated on Drawings

2.14 EXERCISE EQUIPMENT

A. Basis-of-Design: Subject to compliance with requirements, provide the following products or approved equal:

1. Manufacturer: Greenfields or approved equal
2. Model: As indicated on Drawings
3. Color: As indicated on Drawings

2.15 MATERIALS

A. Aluminum: Alloy and temper recommended by aluminum producer and finisher for type of use and finish indicated; free of surface blemishes and complying with the following:

1. Rolled or Cold-Finished Bars, Rods, and Wire: ASTM B211.
2. Extruded Bars, Rods, Wire, Profiles, and Tubes: ASTM B221.
3. Structural Pipe and Tube: ASTM B429/B429M.
4. Sheet and Plate: ASTM B209.
5. Castings: ASTM B26/B26M.

B. Steel and Iron: Free of surface blemishes and complying with the following:

1. Plates, Shapes, and Bars: ASTM A36/A36M.
2. Steel Pipe: Standard-weight steel pipe complying with ASTM A53/A53M, or electric-resistance-welded pipe complying with ASTM A135/A135M.
3. Tubing: Cold-formed steel tubing complying with ASTM A500/A500M.
4. Mechanical Tubing: Cold-rolled, electric-resistance-welded carbon or alloy steel tubing complying with ASTM A513/A513M, or steel tubing fabricated from steel complying with ASTM A1011/A1011M and complying with dimensional tolerances in ASTM A500/A500M; zinc coated internally and externally.
5. Sheet: Commercial steel sheet complying with ASTM A1011/A1011M.
6. Perforated Metal: From steel sheet not less than nominal thickness; manufacturer's standard perforation pattern.
7. Expanded Metal: Carbon-steel sheets, deburred after expansion, and complying with ASTM F1267.
8. Malleable-Iron Castings: ASTM A47/A47M, grade as recommended by fabricator for type of use intended.
9. Gray-Iron Castings: ASTM A48/A48M, Class 200.

C. Stainless Steel: Free of surface blemishes and complying with the following:

Copyright © 2022 by the American Institute of Architects. Warning: This AIA MasterSpec based document is protected by U.S. Copyright Law and International Treaties. A valid, current MasterSpec license is required for editing or use of this document.

1. Sheet, Strip, Plate, and Flat Bars: ASTM A240/A240M or ASTM A666.
2. Pipe: Schedule 40 steel pipe complying with ASTM A312/A312M.
3. Tubing: ASTM A554.

D. Fiberglass: Multiple laminations of glass-fiber-reinforced polyester resin with UV-light stable, colorfast, nonfading, weather- and stain-resistant, colored polyester gel coat, and with manufacturer's standard finish.

E. Plastic: Color impregnated, color and UV-light stabilized, and mold resistant.

1. Polyethylene: Fabricated from virgin plastic HDPE resin.

F. Anchors, Fasteners, Fittings, and Hardware: Galvanized steel or Manufacturer's standard, corrosion-resistant-coated or noncorrodible materials; commercial quality, tamperproof, vandal and theft resistant, concealed, recessed, and capped or plugged.

1. Angle Anchors: For inconspicuously bolting legs of site furnishings to on-grade substrate; extent as indicated.
2. Antitheft Hold-Down Brackets: For securing site furnishings to substrate; two per unit extent as indicated on Drawings.

G. Nonshrink, Nonmetallic Grout: Premixed, factory-packaged, nonstaining, noncorrosive, nongaseous grout complying with ASTM C1107/C1107M; recommended in writing by manufacturer, for exterior applications.

H. Erosion-Resistant Anchoring Cement: Factory-packaged, nonshrink, nonstaining, hydraulic-controlled expansion cement formulation for mixing with potable water at Project site to create pourable anchoring, patching, and grouting compound; resistant to erosion from water exposure without needing protection by a sealer or waterproof coating; recommended in writing by manufacturer, for exterior applications.

I. Galvanizing: Where indicated for steel and iron components, provide the following protective zinc coating applied to components after fabrication:

1. Zinc-Coated Tubing: External, zinc with organic overcoat, consisting of a minimum of 0.9 oz./sq. ft. of zinc after welding, a chromate conversion coating, and a clear, polymer film. Internal, same as external or consisting of 81 percent zinc pigmented coating, not less than 0.3 mil thick.
2. Hot-Dip Galvanizing: According to ASTM A123/A123M, ASTM A153/A153M, or ASTM A924/A924M.

2.16 WOOD-PRESERVATIVE-TREATED MATERIALS

A. Preservative Treatment: Pressure-treat wood according to AWPA U1, Use Category UC3b, and the following:

1. Use preservative chemicals acceptable to authorities having jurisdiction and containing no arsenic or chromium. Use chemical formulations that do not bleed through or otherwise adversely affect finishes. Do not use colorants to distinguish treated materials from untreated materials.

Copyright © 2022 by the American Institute of Architects. Warning: This AIA MasterSpec based document is protected by U.S. Copyright Law and International Treaties. A valid, current MasterSpec license is required for editing or use of this document.

2. Kiln-dry lumber and plywood after treatment to a maximum moisture content, respectively, of 19 and 15 percent. Do not use materials that are warped or do not comply with requirements for untreated materials.

2.17 FABRICATION

A. Metal Components: Form to required shapes and sizes with true, consistent curves, lines, and angles. Separate metals from dissimilar materials to prevent electrolytic action.

B. Welded Connections: Weld connections continuously. Weld solid members with full-length, full-penetration welds and hollow members with full-circumference welds. At exposed connections, finish surfaces smooth and blended, so no roughness or unevenness shows after finishing and welded surface matches contours of adjoining surfaces.

C. Pipes and Tubes: Form simple and compound curves by bending members in jigs to produce uniform curvature for each repetitive configuration required; maintain cylindrical cross section of member throughout entire bend without buckling, twisting, cracking, or otherwise deforming exposed surfaces of handrail and railing components.

D. Preservative-Treated Wood Components: Complete fabrication of treated items before treatment if possible. If cut after treatment, apply field treatment complying with AWPA M4 to cut surfaces.

E. Exposed Surfaces: Polished, sanded, or otherwise finished; all surfaces smooth, free of burrs, barbs, splinters, and sharpness; all edges and ends rolled, rounded, or capped.

F. Factory Assembly: Factory assemble components to greatest extent possible to minimize field assembly. Clearly mark units for assembly in the field.

2.18 GENERAL FINISH REQUIREMENTS

A. Appearance of Finished Work: Noticeable variations in same piece are unacceptable. Variations in appearance of adjoining components are acceptable if they are within the range of approved Samples and are assembled or installed to minimize contrast.

2.19 ALUMINUM FINISHES

A. Powder-Coat Finish: Manufacturer's standard polyester powder-coat finish complying with finish manufacturer's written instructions for surface preparation, including pretreatment, application, baking, and minimum dry film thickness.

2.20 STEEL AND GALVANIZED-STEEL FINISHES

A. Powder-Coat Finish: Manufacturer's standard polyester, powder-coat finish complying with finish manufacturer's written instructions for surface preparation, including pretreatment, application, baking, and minimum dry film thickness.

Copyright © 2022 by the American Institute of Architects. Warning: This AIA MasterSpec based document is protected by U.S. Copyright Law and International Treaties. A valid, current MasterSpec license is required for editing or use of this document.

B. PVC Finish: Manufacturer's standard, UV-light stabilized, mold-resistant, slip-resistant, matte-textured, dipped or sprayed-on, PVC-plastisol finish, with flame retardant added; complying with coating manufacturer's written instructions for pretreatment, application, and minimum dry film thickness.

2.21 IRON FINISHES

A. Powder-Coat Finish: Manufacturer's standard polyester powder-coat finish complying with finish manufacturer's written instructions for surface preparation, including pretreatment, application, baking, and minimum dry film thickness.

2.22 STAINLESS STEEL FINISHES

A. Surface Preparation: Remove tool and die marks and stretch lines, or blend into finish.

B. Polished Finishes: Grind and polish surfaces to produce uniform finish, free of cross scratches.

1. Run directional finishes with long dimension of each piece.
2. Directional Satin Finish: ASTM A480/A480M, No 4.
3. Dull Satin Finish: ASTM A480/A480M, No. 6.

PART 3 - EXECUTION

3.1 EXAMINATION

A. Examine areas and conditions, with Installer present, for compliance with requirements for correct and level finished grade, mounting surfaces, installation tolerances, and other conditions affecting performance of the Work.

B. Proceed with installation only after unsatisfactory conditions have been corrected.

3.2 INSTALLATION

A. Comply with manufacturer's written installation instructions unless more stringent requirements are indicated. Complete field assembly of site furnishings where required.

B. Unless otherwise indicated, install site furnishings after landscaping and paving have been completed.

C. Install site furnishings level, plumb, true, and securely anchored at locations indicated on Drawings.

D. Post Setting: Set cast-in support posts in concrete footing with smooth top, shaped to shed water. Protect portion of posts above footing from concrete splatter. Verify that posts are set plumb or at correct angle and are aligned and at correct height and spacing. Hold posts in position during placement and finishing operations until concrete is sufficiently cured.

Copyright © 2022 by the American Institute of Architects. Warning: This AIA MasterSpec based document is protected by U.S. Copyright Law and International Treaties. A valid, current MasterSpec license is required for editing or use of this document.

E. Posts Set into Voids in Concrete: Form or core-drill holes for installing posts in concrete to depth recommended in writing by manufacturer of site furnishings and 3/4 inch larger than OD of post. Clean holes of loose material, insert posts, and fill annular space between post and concrete with nonshrink, nonmetallic grout or anchoring cement, mixed and placed to comply with anchoring material manufacturer's written instructions, with top smoothed and shaped to shed water.

F. Pipe Sleeves: Use steel pipe sleeves preset and anchored into concrete for installing posts. After posts have been inserted into sleeves, fill annular space between post and sleeve with nonshrink, nonmetallic grout or anchoring cement, mixed and placed to comply with anchoring material manufacturer's written instructions, with top smoothed and shaped to shed water.

END OF SECTION 323300

Copyright © 2022 by the American Institute of Architects. Warning: This AIA MasterSpec based document is protected by U.S. Copyright Law and International Treaties. A valid, current MasterSpec license is required for editing or use of this document.

SECTION 328400 - PLANTING IRRIGATION

PART 1 - GENERAL

1.1 SUMMARY

A. Section Includes:

1. Pipes, tubes, and fittings.
2. Encasement for piping.
3. Manual valves.
4. Pressure-reducing valves.
5. Automatic control valves.
6. Automatic drain valves.
7. Transition fittings.
8. Dielectric fittings.
9. Miscellaneous piping specialties.
10. Sprinklers.
11. Quick couplers.
12. Drip irrigation specialties.
13. Controllers.
14. Boxes for automatic control valves.

1.2 DEFINITIONS

A. Circuit Piping: Downstream from control valves to sprinklers, specialties, and drain valves. Piping is under pressure during flow.

B. Drain Piping: Downstream from circuit-piping drain valves. Piping is not under pressure.

C. ET Controllers: Evapo-Transpiration Controllers. Irrigation controllers, which use some method of weather-based adjustment of irrigation. These adjusting methods include use of historical monthly averages of ET, broadcasting of ET measurements, or use of on-site sensors to track ET.

D. Main Piping: Downstream from point of connection to water distribution piping to, and including, control valves. Piping is under water-distribution-system pressure.

E. Low Voltage: As defined in NFPA 70 for circuits and equipment operating at less than 50 V or for remote-control, signaling power-limited circuits.

1.3 ACTION SUBMITTALS

A. Product Data:

1. Pipes, tubes, and fittings.
2. Encasement for piping.

Copyright © 2022 by the American Institute of Architects. Warning: This AIA MasterSpec based document is protected by U.S. Copyright Law and International Treaties. A valid, current MasterSpec license is required for editing or use of this document.

3. Manual valves.
4. Pressure-reducing valves.
5. Automatic control valves.
6. Automatic drain valves.
7. Transition fittings.
8. Dielectric fittings.
9. Miscellaneous piping specialties.
10. Sprinklers.
11. Quick couplers.
12. Drip irrigation specialties.
13. Controllers.
14. Boxes for automatic control valves.
15. Include rated capacities, operating characteristics, electrical characteristics, and furnished specialties and accessories.

B. Wiring Diagrams: For power, signal, and control wiring.

1.4 INFORMATIONAL SUBMITTALS

A. Coordination Drawings: Irrigation systems, drawn to scale, on which components are indicated and coordinated with each other, using input from Installers of the items involved. Also include adjustments necessary to avoid plantings and obstructions, such as signs and light standards.

B. Zoning Chart: Indicate each irrigation zone and its control valve.

C. Controller Timing Schedule: Indicate timing settings for each automatic controller zone.

D. Field Quality-Control Submittals:

1. Field quality-control reports.

E. Qualification Statements: For Installer.

F. Delegated design engineer qualifications.

1.5 CLOSEOUT SUBMITTALS

A. Operation and Maintenance Data: For sprinklers, controllers, and automatic control valves to include in operation and maintenance manuals.

1.6 MAINTENANCE MATERIAL SUBMITTALS

A. Extra Stock Material: Furnish extra materials to District that match products installed and that are packaged with protective covering for storage and identified with labels describing contents.

1. Impact Sprinklers: Equal to percent of amount installed for each type and size indicated, but no fewer than 4 units.
2. Spray Sprinklers: Equal to percent of amount installed for each type and size indicated, but no fewer than 12 units.

Copyright © 2022 by the American Institute of Architects. Warning: This AIA MasterSpec based document is protected by U.S. Copyright Law and International Treaties. A valid, current MasterSpec license is required for editing or use of this document.

3. Bubblers: Equal to percent of amount installed for each type indicated, but no fewer than 12units.
4. Emitters: Equal to percent of amount installed for each type indicated, but no fewer than 24 units.
5. Drip-Tube System Tubing: Equal to percent of total length installed for each type and size indicated, but not less than 100 ft..
6. Soaker Tubes: Equal to Insert number percent of total length installed for each type and size indicated, but not less than 100 ft..

B. Schedule of maintenance material items.

1. Valve chart: Prepare a chart using the irrigation plan, indicating the final location of valves and areas each valve services in a colored map.

1.7 QUALITY ASSURANCE

A. Qualifications:

1. Installers: Entity that employs a Certified Irrigation Designer - Landscape qualified by the Irrigation Association.

B. Electrical Components, Devices, and Accessories: Listed and labeled as defined in NFPA 70, by a qualified testing agency, and marked for intended location and application.

1.8 DELIVERY, STORAGE, AND HANDLING

A. Deliver piping with factory-applied end caps. Maintain end caps through shipping, storage, and handling to prevent pipe-end damage and entrance of dirt, debris, and moisture.

B. Store plastic piping protected from direct sunlight. Support piping to prevent sagging and bending.

1.9 FIELD CONDITIONSRetain this article if interruption of existing water service is required.

A. Contractor to verify existing static water pressure meets the design intent. Report any discrepancies immediately to the OWNER and LANDSCAPE ARCHITECT, prior to proceeding with installation.

B. Interruption of Existing Water Service: Do not interrupt water service to facilities occupied by District or others unless permitted under the following conditions and then only after arranging to provide temporary water service according to requirements indicated:

1. Notify Construction Manager no fewer than two days in advance of proposed interruption of water service.
2. Do not proceed with interruption of water service without Construction Manager's written permission.

Copyright © 2022 by the American Institute of Architects. Warning: This AIA MasterSpec based document is protected by U.S. Copyright Law and International Treaties. A valid, current MasterSpec license is required for editing or use of this document.

PART 2 - PRODUCTS

2.1 PERFORMANCE REQUIREMENTS

A. Irrigation Zone Control: Automatic operation with controller and automatic control valves.

B. Location of Sprinklers and Specialties: Design location is approximate. Make minor adjustments necessary to avoid plantings and obstructions, such as signs and light standards. Maintain 100 percent irrigation coverage of areas indicated.

C. Minimum Working Pressures: The following are minimum pressure requirements for piping, valves, and specialties unless otherwise indicated:

1. Irrigation Main Piping: 200 psig.
2. Circuit Piping: 150 psig.

2.2 PIPES, TUBES, AND FITTINGS

A. Comply with requirements in "Piping Schedule" Article for applications of pipe, tube, and fitting materials, and for joining methods for specific services, service locations, and pipe sizes.

B. PVC Pipe: ASTM D1785, PVC 1120 compound, Schedule 40.

1. PVC Socket Fittings: ASTM D2466, Schedule 80.
2. PVC Threaded Fittings: ASTM D2464, Schedule 80.
3. PVC Socket Unions: Construction similar to that of MSS SP-107, except both headpiece and tailpiece shall be PVC with socket ends.

C. PVC Pipe, Pressure Rated: ASTM D2241, PVC 1120 compound, SDR 21 and SDR 26.

1. PVC Socket Fittings: ASTM D2467, Schedule 80.
2. PVC Socket Unions: Construction similar to that of MSS SP-107, except both headpiece and tailpiece shall be PVC with socket or threaded ends.

2.3 PIPING JOINING MATERIALS

A. Pipe-Flange Gasket Materials: AWWA C110, rubber, flat face, 1/8 inch thick unless otherwise indicated; full-face or ring type unless otherwise indicated.

B. Metal, Pipe-Flange Bolts and Nuts: ASME B18.2.1, carbon steel unless otherwise indicated.

C. Brazing Filler Metals: AWS A5.8/A5.8M, BCuP Series, copper-phosphorus alloys for general-duty brazing unless otherwise indicated.

D. Solder Filler Metals: ASTM B32, lead-free alloys. Include water-flushable flux in accordance with ASTM B813.

E. Solvent Cements for Joining PVC Piping: ASTM D2564. Include primer in accordance with ASTM F656.

Copyright © 2022 by the American Institute of Architects. Warning: This AIA MasterSpec based document is protected by U.S. Copyright Law and International Treaties. A valid, current MasterSpec license is required for editing or use of this document.

F. Plastic, Pipe-Flange Gasket, Bolts, and Nuts: Type and material recommended by piping system manufacturer unless otherwise indicated.

2.4 ENCASEMENT FOR PIPING

A. Standard: ASTM A674 or AWWA C105.

B. Form: Sheet or tube.

C. Material: LLDPE film of 0.008-inch minimum thickness.

2.5 MANUAL VALVES

A. Shutoff Rods for Curb-Valve Casings: Furnish one steel, tee-handle shutoff rod(s) with one pointed end, stem of length to operate deepest buried valve, and slotted end matching curb valve for Project.

B. Brass Ball Valves: As indicated on Drawings.

C. Bronze Gate Valves: As indicated on Drawings.

D. Operating Wrenches for Iron Gate Valve Casings: Furnish one steel, tee-handle operating wrench(es) with one pointed end, stem of length to operate deepest buried valve, and socket matching valve operating nut for Project.

2.6 PRESSURE-REDUCING VALVES

A. Water Regulators:

1. Description:

a. Standard: ASSE 1003.
b. Body Material: Bronze for NPS 2 and smaller; cast iron with interior lining complying with AWWA C550 or that is FDA approved for NPS 2-1/2 and NPS 3.
c. Pressure Rating: Initial pressure of 150 psig.
d. End Connections: Threaded for NPS 2 and smaller; flanged for NPS 2-1/2 and NPS 3.

B. Water-Control Valves: As indicated on Drawings.

1. Description: Pilot-operation, diaphragm-type, single-seated main water-control valve. Include small pilot control valve, restrictor device, specialty fittings, and sensor piping.

2.7 AUTOMATIC CONTROL VALVES

A. Plastic, Automatic Control Valves:

Copyright © 2022 by the American Institute of Architects. Warning: This AIA MasterSpec based document is protected by U.S. Copyright Law and International Treaties. A valid, current MasterSpec license is required for editing or use of this document.

1. Description: Molded-plastic body, normally closed, diaphragm type with manual-flow adjustment, and operated by 24 V ac solenoid.

2.8 AUTOMATIC DRAIN VALVES

A. Description: Spring-loaded-ball type of corrosion-resistant construction and designed to open for drainage if line pressure drops below 2-1/2 to 3 psig.

2.9 TRANSITION FITTINGS

A. General Requirements: Same size as, and with pressure rating at least equal to and with ends compatible with, piping to be joined.

B. Transition Couplings: AWWA C219, metal sleeve-type coupling for underground pressure piping.

2.10 MISCELLANEOUS PIPING SPECIALTIES

A. Pressure Gages: ASME B40.1. Include 4-1/2-inch- diameter dial, dial range of two times system operating pressure, and bottom outlet.

2.11 SPRINKLERS

A. General Requirements: Designed for uniform coverage over entire spray area indicated at available water pressure.

B. Plastic, Pop-up, Gear-Drive Rotary Sprinklers: As indicated on Drawings.

2.12 QUICK COUPLERS

A. Description: Factory-fabricated, bronze or brass, two-piece assembly. Include coupler water-seal valve; removable upper body with spring-loaded or weighted, rubber-covered cap; hose swivel with ASME B1.20.7, 3/4-11.5NH threads for garden hose on outlet; and operating key.

1. Locking-Top Option: Vandal-resistant locking feature. Include one matching key(s).

2.13 DRIP IRRIGATION SPECIALTIES

A. Drip Tubes with Direct-Attached Emitters:

1. Tubing: Flexible PE or PVC with plugged end.
2. Emitters: Devices to deliver water at approximately 20 psig.

a. Body Material: PE or vinyl, with flow control.
b. Mounting: Inserted into tubing at set intervals.

Copyright © 2022 by the American Institute of Architects. Warning: This AIA MasterSpec based document is protected by U.S. Copyright Law and International Treaties. A valid, current MasterSpec license is required for editing or use of this document.

B. Off-Ground Supports: Plastic stakes.

C. Application Pressure Regulators: Brass or plastic housing, NPS 3/4, with corrosion-resistant internal parts; capable of controlling outlet pressure to approximately 20 psig.

D. Filter Units: Brass or plastic housing, with corrosion-resistant internal parts; of size and capacity required for devices downstream from unit.

E. Air Relief Valves: Brass or plastic housing, with corrosion-resistant internal parts.

2.14 CONTROLLERS

A. Description:

1. Controller Stations for Automatic Control Valves: Each station is variable from approximately 5 to 60 minutes. Include switch for manual or automatic operation of each station.

2. Interior Control Enclosures: NEMA 250, Type 12, dripproof, with locking cover and two matching keys.

   a. Body Material: Molded plastic.
   b. Mounting: Surface type for wall.

3. Control Transformer: 24 V secondary, with primary fuse.
4. Timing Device: Adjustable, 24-hour, 14-day clock, with automatic operations to skip operation any day in timer period, to operate every other day, or to operate two or more times daily.

   a. Manual or Semiautomatic Operation: Allows this mode without disturbing preset automatic operation.
   b. Nickel-Cadmium Battery and Trickle Charger: Automatically powers timing device during power outages.
   c. Surge Protection: Metal-oxide-varistor type on each station and primary power.

5. Moisture Sensor: Adjustable from one to seven days, to shut off water flow during rain.
6. Smart Controllers: Use ET, tested in accordance with IA SWAT Climatological Based Controllers 8th Draft Testing Protocol and compliant with ASHRAE 189.1.
7. Wiring: UL 493, Type UF multiconductor, with solid-copper conductors; insulated cable; suitable for direct burial.

   a. Feeder-Circuit Cables: No. 12 AWG minimum, between building and controllers.
   b. Low-Voltage, Branch-Circuit Cables: No. 14 AWG minimum, between controllers and automatic control valves; color-coded different from feeder-circuit-cable jacket color; with jackets of different colors for multiple-cable installation in same trench.
   c. Splicing Materials: Manufacturer's packaged kit consisting of insulating, spring-type connector or crimped joint and epoxy resin moisture seal; suitable for direct burial.

Copyright © 2022 by the American Institute of Architects. Warning: This AIA MasterSpec based document is protected by U.S. Copyright Law and International Treaties. A valid, current MasterSpec license is required for editing or use of this document.

2.15 BOXES FOR AUTOMATIC CONTROL VALVES

A. Polymer-Concrete Boxes:

1. Description: Box and cover, with open bottom and openings for piping; designed for installing flush with grade.

a. Size: As required for valves and service.
b. Shape: Round or Rectangular.
c. Sidewall Material: Polymer concrete with lateral and vertical sidewall design loading of 5000 lb minimum over 10 by 10 inches square.
d. Cover Material: Polymer concrete with cover design loading of 5000 lb minimum over 10 by 10 inches square.

1) Lettering: "VALVE BOX IRRIGATION."

B. Drainage Backfill: Cleaned gravel or crushed stone, graded from 3/4 inch minimum to 3 inches maximum.

PART 3 - EXECUTION

3.1 EARTHWORK

A. Excavating, trenching, and backfilling are specified in Section 312000 "Earth Moving."

B. Install warning tape directly above pressure piping, 12 inches below finished grades, except 6 inches below subgrade under pavement and slabs.

C. Drain Pockets: Excavate to sizes indicated. Backfill with cleaned gravel or crushed stone, graded from 3/4 to 3 inches, to 12 inches below grade. Cover gravel or crushed stone with sheet of asphalt-saturated felt and backfill remainder with excavated material.

D. Provide minimum cover over top of underground piping according to the following:

1. Irrigation Main Piping: Minimum depth of 36 inches below finished grade, or not less than 18 inches below average local frost depth, whichever is deeper.
2. Circuit Piping: 18 inches.
3. Drain Piping: 18 inches.
4. Sleeves: 24 inches.

3.2 PREPARATION

A. Set stakes to identify locations of proposed irrigation system. Obtain Landscape Architect's approval before excavation.

Copyright © 2022 by the American Institute of Architects. Warning: This AIA MasterSpec based document is protected by U.S. Copyright Law and International Treaties. A valid, current MasterSpec license is required for editing or use of this document.

3.3 INSTALLATION OF PIPING

A. Location and Arrangement: Drawings indicate location and arrangement of piping systems. Install piping as indicated unless deviations are approved on Coordination Drawings.

B. Install piping at minimum uniform slope of 0.5 percent down toward drain valves.

C. Install piping free of sags and bends.

D. Install groups of pipes parallel to each other, spaced to permit valve servicing.

E. Install fittings for changes in direction and branch connections.

F. Install unions adjacent to valves and to final connections to other components with NPS 2 or smaller pipe connection.

G. Install flanges adjacent to valves and to final connections to other components with NPS 2-1/2 or larger pipe connection.

H. Install underground thermoplastic piping in accordance with ASTM D2774 and ASTM .

I. Install expansion loops in control-valve boxes for plastic piping.

J. Lay piping on solid subbase, uniformly sloped without humps or depressions.

K. Install PVC piping in dry weather when temperature is above 40 deg F. Allow joints to cure at least 24 hours at temperatures above 40 deg F before testing.

L. Install water regulators with shutoff valve and strainer on inlet and pressure gage on outlet. Install shutoff valve on outlet. Install aboveground or in control-valve boxes.

M. Install piping in sleeves under parking lots, roadways, and sidewalks.

N. Install sleeves made of Schedule 40, PVC pipe and socket fittings, and solvent-cemented joints.

O. Install transition fittings for plastic-to-metal pipe connections according to the following:

1. Underground Piping:

a. NPS 1-1/2 and Smaller: Plastic-to-metal transition fittings.
b. NPS 2 and Larger: AWWA transition couplings.

P. Install dielectric fittings for dissimilar-metal pipe connections according to the following:

1. Underground Piping:

a. NPS 2 and Smaller: Dielectric coupling or dielectric nipple.
b. NPS 2-1/2 and Larger: Prohibited except in control-valve box.

2. Piping in Control-Valve Boxes:

a. NPS 2 and Smaller: Dielectric union.

Copyright © 2022 by the American Institute of Architects. Warning: This AIA MasterSpec based document is protected by U.S. Copyright Law and International Treaties. A valid, current MasterSpec license is required for editing or use of this document.

b. NPS 2-1/2 to NPS 4: Dielectric flange.
c. NPS 5 and Larger: Dielectric flange kit.

3.4 JOINT CONSTRUCTION

A. Ream ends of pipes and tubes and remove burrs. Bevel plain ends of steel pipe.

B. Remove scale, slag, dirt, and debris from inside and outside of pipe and fittings before assembly.

C. Threaded Joints: Thread pipe with tapered pipe threads in accordance with ASME B1.20.1. Cut threads full and clean using sharp dies. Ream threaded pipe ends to remove burrs and restore full ID. Join pipe fittings and valves as follows:

1. Apply appropriate tape or thread compound to external pipe threads unless dry seal threading is specified.
2. Damaged Threads: Do not use pipe or pipe fittings with threads that are corroded or damaged. Do not use pipe sections that have cracked or open welds.

D. Flanged Joints: Select rubber gasket material of size, type, and thickness for service application. Install gasket concentrically positioned. Use suitable lubricants on bolt threads.

E. Ductile-Iron Piping Gasketed Joints: Comply with AWWA C600 and AWWA M41.

F. PE Piping Fastener Joints: Join with insert fittings and bands or fasteners in accordance with piping manufacturer's written instructions.

G. PE Piping Heat-Fusion Joints: Clean and dry joining surfaces by wiping with clean cloth or paper towels. Join in accordance with ASTM D2657.

1. Plain-End PE Pipe and Fittings: Use butt fusion.
2. Plain-End PE Pipe and Socket Fittings: Use socket fusion.

H. PVC Piping Solvent-Cemented Joints: Clean and dry joining surfaces. Join pipe and fittings in accordance with the following:

1. Comply with ASTM F402 for safe-handling practice of cleaners, primers, and solvent cements.
2. PVC Pressure Piping: Join schedule number, ASTM D1785, PVC pipe and PVC socket fittings in accordance with ASTM D2672. Join other-than-schedule-number PVC pipe and socket fittings in accordance with ASTM D2855.
3. PVC Non-pressure Piping: Join in accordance with ASTM D2855.

3.5 INSTALLATION OF VALVES

A. Pressure-Reducing Valves: Install in boxes for automatic control valves or aboveground between shutoff valves. Install full-size valved bypass.

B. Throttling Valves: Install in underground piping in boxes for automatic control valves.

Copyright © 2022 by the American Institute of Architects. Warning: This AIA MasterSpec based document is protected by U.S. Copyright Law and International Treaties. A valid, current MasterSpec license is required for editing or use of this document.

3.6 INSTALLATION OF SPRINKLERS

A. Install sprinklers after hydrostatic test is completed.

B. Install sprinklers at manufacturer's recommended heights.

C. Locate part-circle sprinklers to maintain a minimum distance of 4 inches from walls and 2 inches from other boundaries unless otherwise indicated.

3.7 INSTALLATION OF DRIP IRRIGATION SPECIALTIES

A. Install manifold emitter systems with tubing to emitters. Plug unused manifold outlets. Install emitters on off-ground supports at height indicated.

B. Install multiple-outlet emitter systems with tubing to outlets. Plug unused emitter outlets. Install outlets on off-ground supports at height indicated.

C. Install drip tubes with direct-attached emitters on ground.

D. Install drip tubes with remote discharge on ground with outlets on off-ground supports at height indicated.

E. Install off-ground supports of length required for indicated mounted height of device.

F. Install application pressure regulators and filter units in piping near device being protected, and in control-valve boxes.

G. Install air relief valves and in piping in control-valve boxes.

3.8 INSTALLATION OF AUTOMATIC IRRIGATION CONTROL SYSTEM

A. Equipment Mounting, Interior: Install controllers on interior wall of restroom building.

1. Place and secure anchorage devices. Use setting drawings, templates, diagrams, instructions, and directions furnished with items to be embedded.
2. Install anchor bolts to elevations required for proper attachment to supported equipment.

B. Install control cable in same trench as irrigation piping and at least 2 inches below piping. Provide conductors of size not smaller than recommended by controller manufacturer. Install cable in separate sleeve under paved areas.

3.9 CONNECTIONS

A. Comply with requirements for piping for water supply from exterior water service piping, water meters, protective enclosures, and backflow preventers. Drawings indicate general arrangement of piping, fittings, and specialties.

B. Install piping adjacent to equipment, valves, and devices to allow service and maintenance.

Copyright © 2022 by the American Institute of Architects. Warning: This AIA MasterSpec based document is protected by U.S. Copyright Law and International Treaties. A valid, current MasterSpec license is required for editing or use of this document.

C. Connect wiring between controllers and automatic control valves.

3.10 IDENTIFICATION

A. Equipment Nameplates and Signs: Install engraved plastic-laminate equipment nameplates and signs on each automatic controller.

1. Text: In addition to identifying unit, distinguish between multiple units, inform operator of operational requirements, indicate safety and emergency precautions, and warn of hazards and improper operations.

B. Warning Tapes: Arrange for installation of continuous, underground, detectable warning tapes over underground piping during backfilling of trenches. See Section 312000 "Earth Moving" for warning tapes.

3.11 FIELD QUALITY CONTROL

A. Manufacturer's Field Service: Engage a factory-authorized service representative to inspect, test, and adjust components, assemblies, and equipment installations, including connections.

B. Perform tests and inspections.

1. Manufacturer's Field Service with Test Assistance: Engage a factory-authorized service representative to inspect components, assemblies, and equipment installations, including connections, and to assist in testing.

C. Tests and Inspections:

1. Leak Test: After installation, charge system and test for leaks. Repair leaks and retest until no leaks exist.
2. Operational Test: After electrical circuitry has been energized, operate controllers and automatic control valves to confirm proper system operation.
3. Test and adjust controls and safeties. Replace damaged and malfunctioning controls and equipment.
4. Irrigation system will be considered defective if it does not pass tests and inspections.

D. Prepare test and inspection reports.

3.12 STARTUP SERVICE

A. Perform startup service.

1. Complete installation and startup checks in accordance with manufacturer's written instructions.
2. Verify that controllers are installed and connected in accordance with the Contract Documents.
3. Verify that electrical wiring installation complies with manufacturer's submittal.

Copyright © 2022 by the American Institute of Architects. Warning: This AIA MasterSpec based document is protected by U.S. Copyright Law and International Treaties. A valid, current MasterSpec license is required for editing or use of this document.

3.13 ADJUSTING

A. Adjust settings of controllers.

B. Adjust automatic control valves to provide flow rate at rated operating pressure required for each sprinkler circuit.

C. Adjust sprinklers and devices, except those intended to be mounted aboveground, so they will be flush with, or not more than 1/2 inch above, finish grade.

3.14 CLEANING

A. Flush dirt and debris from piping before installing sprinklers and other devices.

3.15 DEMONSTRATION

A. Train District's maintenance personnel to adjust, operate, and maintain automatic control valves and controllers.

3.16 PIPING SCHEDULE

A. Install components having pressure rating equal to or greater than system operating pressure.

B. Piping in control-valve boxes and aboveground may be joined with flanges or unions instead of joints indicated.

C. Underground Irrigation Main Piping:

1. NPS 4 and Smaller:

a. Schedule 40, PVC pipe; Schedule 80, PVC socket fittings; and solvent-cemented joints.

D. Circuit Piping:

1. NPS 2 and Smaller:

a. Schedule 40, PVC pipe and socket fittings; and solvent-cemented joints.

E. Underground Branches and Offsets at Sprinklers and Devices: Schedule 80, PVC pipe; threaded PVC fittings; and threaded joints.

1. Option: Plastic swing-joint assemblies, with offsets for flexible joints, manufactured for this application.

3.17 VALVE SCHEDULE

A. Underground, Shutoff-Duty Valves: Use the following:

Copyright © 2022 by the American Institute of Architects. Warning: This AIA MasterSpec based document is protected by U.S. Copyright Law and International Treaties. A valid, current MasterSpec license is required for editing or use of this document.

1. NPS 2 and Smaller: Curb valve, curb-valve casing, and shutoff rod.
2. NPS 3 and Larger: Iron gate valve, resilient seated; iron gate valve casing; and operating wrench(es).

END OF SECTION 328400

Copyright © 2022 by the American Institute of Architects. Warning: This AIA MasterSpec based document is protected by U.S. Copyright Law and International Treaties. A valid, current MasterSpec license is required for editing or use of this document.

SECTION 329113 - SOIL PREPARATION

PART 1 - GENERAL

1.1 RELATED DOCUMENTS

A. Drawings and general provisions of the Contract, including General and Supplementary Conditions and Division 01 Specification Sections, apply to this Section.

1.2 SUMMARY

A. Section includes planting soils and layered soil assemblies specified by composition of the mixes.

B. Related Requirements:
1. Section 311000 "Site Clearing" for topsoil stripping and stockpiling.
2. Section 329200 "Turf and Grasses" for placing planting soil for turf and grasses.
3. Section 329300 "Plants" for placing planting soil for plantings.

1.3 ALLOWANCES

A. Preconstruction and field quality-control testing is part of testing and inspecting allowance.

1.4 DEFINITIONS

A. AAPFCO: Association of American Plant Food Control Officials.

B. Backfill: The earth used to replace or the act of replacing earth in an excavation. This can be amended or unamended soil as indicated.

C. CEC: Cation exchange capacity.

D. Compost: The product resulting from the controlled biological decomposition of organic material that has been sanitized through the generation of heat and stabilized to the point that it is beneficial to plant growth.

E. Duff Layer: A surface layer of soil, typical of forested areas, that is composed of mostly decayed leaves, twigs, and detritus.

F. Imported Soil: Soil that is transported to Project site for use.

G. Layered Soil Assembly: A designed series of planting soils, layered on each other, that together produce an environment for plant growth.

H. Manufactured Soil: Soil produced by blending soils, sand, stabilized organic soil amendments, and other materials to produce planting soil.

Copyright © 2022 by the American Institute of Landscape Architects. Warning: This AIA MasterSpec based document is protected by U.S. Copyright Law and International Treaties. A valid, current MasterSpec license is required for editing or use of this document.

I. NAPT: North American Proficiency Testing Program. An SSSA program to assist soil-, plant-, and water-testing laboratories through interlaboratory sample exchanges and statistical evaluation of analytical data.

J. Organic Matter: The total of organic materials in soil exclusive of undecayed plant and animal tissues, their partial decomposition products, and the soil biomass; also called "humus" or "soil organic matter."

K. Planting Soil: Existing, on-site soil; imported soil; or manufactured soil that has been modified as specified with soil amendments and perhaps fertilizers to produce a soil mixture best for plant growth.

L. RCRA Metals: Hazardous metals identified by the EPA under the Resource Conservation and Recovery Act.

M. SSSA: Soil Science Society of America.

N. Subgrade: Surface or elevation of subsoil remaining after excavation is complete, or the top surface of a fill or backfill before planting soil is placed.

O. Subsoil: Soil beneath the level of subgrade; soil beneath the topsoil layers of a naturally occurring soil profile, typified by less than 1 percent organic matter and few soil organisms.

P. Surface Soil: Soil that is present at the top layer of the existing soil profile. In undisturbed areas, surface soil is typically called "topsoil"; but in disturbed areas such as urban environments, the surface soil can be subsoil.

Q. USCC: U.S. Composting Council.

1.5 PREINSTALLATION MEETINGS

A. Preinstallation Conference: Conduct conference at Project site.

1.6 ACTION SUBMITTALS

A. Product Data: For each type of product.

1. Include recommendations for application and use.
2. Include test data substantiating that products comply with requirements.
3. Include sieve analyses for aggregate materials.
4. Material Certificates: For each type of imported soil soil amendment and fertilizer before delivery to the site, according to the following:

    a. Manufacturer's qualified testing agency's certified analysis of standard products.
    b. Analysis of fertilizers, by a qualified testing agency, made according to AAPFCO methods for testing and labeling and according to AAPFCO's SUIP #25.
    c. Analysis of nonstandard materials, by a qualified testing agency, made according to SSSA methods, where applicable.

Copyright © 2022 by the American Institute of Landscape Architects. Warning: This AIA MasterSpec based document is protected by U.S. Copyright Law and International Treaties. A valid, current MasterSpec license is required for editing or use of this document.

B. Samples: For each bulk-supplied material, 1-quart volume of each in sealed containers labeled with content, source, and date obtained. Each Sample shall be typical of the lot of material to be furnished; provide an accurate representation of composition, color, and texture.

1.7 INFORMATIONAL SUBMITTALS

A. Qualification Data: For each testing agency.

B. Preconstruction Test Reports: For preconstruction soil analyses specified in "Preconstruction Testing" Article.

C. Field quality-control reports.

1.8 QUALITY ASSURANCE

A. Testing Agency Qualifications: An independent, state-operated, or university-operated laboratory; experienced in soil science, soil testing, and plant nutrition; with the experience and capability to conduct the testing indicated; and that specializes in types of tests to be performed.

1. Laboratories: Subject to compliance with requirements, provide testing .

2. Multiple Laboratories: At Contractor's option, work may be divided among qualified testing laboratories specializing in physical testing, chemical testing, and fertility testing.

1.9 PRECONSTRUCTION TESTING

A. Preconstruction Testing Service: Engage a qualified testing agency to perform preconstruction soil analyses on existing, on-site soil and imported soil.

1. Notify Landscape Architect seven days in advance of the dates and times when laboratory samples will be taken.

B. Preconstruction Soil Analyses: For each unamended soil type, perform testing on soil samples and furnish soil analysis and a written report containing soil-amendment and fertilizer recommendations by a qualified testing agency performing the testing according to "Soil-Sampling Requirements" and "Testing Requirements" articles.

1. Have testing agency identify and label samples and test reports according to sample collection and labeling requirements.

1.10 SOIL-SAMPLING REQUIREMENTS

A. General: Extract soil samples according to requirements in this article.

B. Sample Collection and Labeling: Have samples taken and labeled by Contractor in presence of Landscape Architect or state-certified, -licensed, or -registered soil scientist under the direction of the testing agency.

Copyright © 2022 by the American Institute of Landscape Architects. Warning: This AIA MasterSpec based document is protected by U.S. Copyright Law and International Treaties. A valid, current MasterSpec license is required for editing or use of this document.

1. Number and Location of Samples: Minimum of eight representative soil samples from varied locations where indicated on Drawings for each soil to be used or amended for landscaping purposes.
2. Procedures and Depth of Samples: As directed by Landscape Architect.
3. Division of Samples: Split each sample into two, equal parts. Send half to the testing agency and half to District for its records.
4. Labeling: Label each sample with the date, location keyed to a site plan or other location system, visible soil condition, and sampling depth.

1.11 TESTING REQUIREMENTS

A. General: Perform tests on soil samples according to requirements in this article.

B. Physical Testing:

1. Soil Texture: Soil-particle, size-distribution analysis by the following methods according to SSSA's "Methods of Soil Analysis - Part 1-Physical and Mineralogical Methods":

   a. Sieving Method: Report sand-gradation percentages for very coarse, coarse, medium, fine, and very fine sand; and fragment-gradation (gravel) percentages for fine, medium, and coarse fragments; according to USDA sand and fragment sizes.
   b. Hydrometer Method: Report percentages of sand, silt, and clay.

2. Total Porosity: Calculate using particle density and bulk density according to SSSA's "Methods of Soil Analysis - Part 1-Physical and Mineralogical Methods."
3. Water Retention: According to SSSA's "Methods of Soil Analysis - Part 1-Physical and Mineralogical Methods."
4. Saturated Hydraulic Conductivity: According to SSSA's "Methods of Soil Analysis - Part 1-Physical and Mineralogical Methods"; at 85% compaction according to ASTM D698 (Standard Proctor).

C. Chemical Testing:

1. CEC: Analysis by sodium saturation at pH 7 according to SSSA's "Methods of Soil Analysis - Part 3- Chemical Methods."
2. Clay Mineralogy: Analysis and estimated percentage of expandable clay minerals using CEC by ammonium saturation at pH 7 according to SSSA's "Methods of Soil Analysis - Part 1- Physical and Mineralogical Methods."
3. Metals Hazardous to Human Health: Test for presence and quantities of RCRA metals including aluminum, arsenic, barium, copper, cadmium, chromium, cobalt, lead, lithium, and vanadium. If RCRA metals are present, include recommendations for corrective action.
4. Phytotoxicity: Test for plant-available concentrations of phytotoxic minerals including aluminum, arsenic, barium, cadmium, chlorides, chromium, cobalt, copper, lead, lithium, mercury, nickel, selenium, silver, sodium, strontium, tin, titanium, vanadium, and zinc.

D. Fertility Testing: Soil-fertility analysis according to standard laboratory protocol of SSSA NAPT WERA-103, including the following:

1. Percentage of organic matter.

Copyright © 2022 by the American Institute of Landscape Architects. Warning: This AIA MasterSpec based document is protected by U.S. Copyright Law and International Treaties. A valid, current MasterSpec license is required for editing or use of this document.

2. CEC, calcium percent of CEC, and magnesium percent of CEC.
3. Soil reaction (acidity/alkalinity pH value).
4. Buffered acidity or alkalinity.
5. Nitrogen ppm.
6. Phosphorous ppm.
7. Potassium ppm.
8. Manganese ppm.
9. Manganese-availability ppm.
10. Zinc ppm.
11. Zinc availability ppm.
12. Copper ppm.
13. Sodium ppm and sodium absorption ratio.
14. Soluble-salts ppm.
15. Presence and quantities of problem materials including salts and metals cited in the Standard protocol. If such problem materials are present, provide additional recommendations for corrective action.
16. Other deleterious materials, including their characteristics and content of each.

E. Organic-Matter Content: Analysis using loss-by-ignition method according to SSSA's "Methods of Soil Analysis - Part 3- Chemical Methods."

F. Recommendations: Based on the test results, state recommendations for soil treatments and soil amendments to be incorporated to produce satisfactory planting soil suitable for healthy, viable plants indicated. Include, at a minimum, recommendations for nitrogen, phosphorous, and potassium fertilization, and for micronutrients.

1. Fertilizers and Soil Amendment Rates: State recommendations in weight per 1000 sq. ft. for 6-inchdepth of soil.
2. Soil Reaction: State the recommended liming rates for raising pH or sulfur for lowering pH according to the buffered acidity or buffered alkalinity in weight per 1000 sq. ft. for 6-inchdepth of soil.

1.12 DELIVERY, STORAGE, AND HANDLING

A. Packaged Materials: Deliver packaged materials in original, unopened containers showing weight, certified analysis, name and address of manufacturer, and compliance with state and Federal laws if applicable.

B. Bulk Materials:

1. Do not dump or store bulk materials near structures, utilities, walkways and pavements, or on existing turf areas or plants.
2. Provide erosion-control measures to prevent erosion or displacement of bulk materials, discharge of soil-bearing water runoff, and airborne dust reaching adjacent properties, water conveyance systems, or walkways.
3. Do not move or handle materials when they are wet or frozen.
4. Accompany each delivery of bulk fertilizers and soil amendments with appropriate certificates.

Copyright © 2022 by the American Institute of Landscape Architects. Warning: This AIA MasterSpec based document is protected by U.S. Copyright Law and International Treaties. A valid, current MasterSpec license is required for editing or use of this document.

PART 2 - PRODUCTS

2.1 PLANTING SOILS SPECIFIED BY COMPOSITION

A. General: Soil amendments, fertilizers, and rates of application specified in this article are guidelines that may need revision based on testing laboratory's recommendations after preconstruction soil analyses are performed.

B. Planting-Soil Type: Existing, on-site surface soil, with the duff layer, if any, retained; and stockpiled on-site; modified to produce viable planting soil. Blend existing, on-site surface soil with the following soil amendments and fertilizers in the following quantities to produce planting soil: Per soil analysis results.

C. Planting-Soil Type: Imported, naturally formed soil from off-site sources and consisting of sandy loam soil according to USDA textures; and modified to produce viable planting soil.

1. Sources: Take imported, unamended soil from sources that are naturally well-drained sites where topsoil occurs at least 4 inches deep, not from bogs, or marshes; and that do not contain undesirable organisms; disease-causing plant pathogens; or obnoxious weeds and invasive plants including, but not limited to, quackgrass, Johnsongrass, poison ivy, nutsedge, nimblewill, Canada thistle, bindweed, bentgrass, wild garlic, ground ivy, perennial sorrel, and bromegrass.
2. Additional Properties of Imported Soil before Amending: Soil reaction of pH 6 to 7 and minimum of 2 percent organic-matter content, friable, and with sufficient structure to give good tilth and aeration.
3. Unacceptable Properties: Clean soil of the following:

a. Unacceptable Materials: Concrete slurry, concrete layers or chunks, cement, plaster, building debris, oils, gasoline, diesel fuel, paint thinner, turpentine, tar, roofing compound, acid, and other extraneous materials that are harmful to plant growth.
b. Unsuitable Materials: Stones, roots, plants, sod, clay lumps, and pockets of coarse sand that exceed a combined maximum of 8 percent by dry weight of the imported soil.
c. Large Materials: Stones, clods, roots, clay lumps, and pockets of coarse sand exceeding 2 inches in any dimension.

4. Amended Soil Composition: Blend imported, unamended soil with the following soil amendments and fertilizers in the following quantities to produce planting soil: per soil analysis results.

D. Planting-Soil Type: Manufactured soil consisting of manufacturer's basic topsoil, sandy loam according to USDA textures, blended in a manufacturing facility with sand, stabilized organic soil amendments, and other materials to produce viable planting soil.

1. Additional Properties of Manufacturer's Basic Soil before Amending: Soil reaction of pH 6 to 7 and minimum of 2 percent organic-matter content, friable, and with sufficient structure to give good tilth and aeration.
2. Unacceptable Properties: Manufactured soil shall not contain the following:

Copyright © 2022 by the American Institute of Landscape Architects. Warning: This AIA MasterSpec based document is protected by U.S. Copyright Law and International Treaties. A valid, current MasterSpec license is required for editing or use of this document.

a. Unacceptable Materials: Concrete slurry, concrete layers or chunks, cement, plaster, building debris, oils, gasoline, diesel fuel, paint thinner, turpentine, tar, roofing compound, acid, and other extraneous materials that are harmful to plant growth.
b. Unsuitable Materials: Stones, roots, plants, sod, clay lumps, and pockets of coarse sand that exceed a combined maximum of 5 percent by dry weight of the manufactured soil.
c. Large Materials: Stones, clods, roots, clay lumps, and pockets of coarse sand exceeding 1-1/2 inches in any dimension.

3. Blend manufacturer's basic soil with the following soil amendments and fertilizers in the following quantities to produce planting soil: Per soil analysis results.

2.2 INORGANIC SOIL AMENDMENTS

A. Lime: ASTM C602, agricultural liming material containing a minimum of 80 percent calcium carbonate equivalent and as follows:

1. Class: T, with a minimum of 99 percent passing through a No. 8 sieve and a minimum of 75 percent passing through a No. 60 sieve.
2. Class: O, with a minimum of 95 percent passing through a No. 8 sieve and a minimum of 55 percent passing through a No. 60 sieve.
3. Form: Provide lime in form of ground calcitic limestone.

B. Sulfur: Granular, biodegradable, and containing a minimum of 90 percent elemental sulfur, with a minimum of 99 percent passing through a No. 6 sieve and a maximum of 10 percent passing through a No. 40 sieve.

C. Iron Sulfate: Granulated ferrous sulfate containing a minimum of 20 percent iron and 10 percent sulfur.

D. Perlite: Horticultural perlite, soil amendment grade.

E. Agricultural Gypsum: Minimum 90 percent calcium sulfate, finely ground with 90 percent passing through a No. 50 sieve.

F. Sand: Clean, washed, natural or manufactured, free of toxic materials, and according to ASTM C33/C33M.

2.3 ORGANIC SOIL AMENDMENTS

A. Compost: Well-composted, stable, and weed-free organic matter produced by composting feedstock, and bearing USCC's "Seal of Testing Assurance," and as follows:

1. Feedstock: May include animal waste.
2. Reaction: pH of 5.5 to 8.
3. Soluble-Salt Concentration: Less than 4 dS/m.
4. Moisture Content: 35 to 55 percent by weight.
5. Organic-Matter Content: 30 to 40 percent of dry weight.

Copyright © 2022 by the American Institute of Landscape Architects. Warning: This AIA MasterSpec based document is protected by U.S. Copyright Law and International Treaties. A valid, current MasterSpec license is required for editing or use of this document.

6. Particle Size: Minimum of 98 percent passing through a 4-inch sieve.

B. Sphagnum Peat: Partially decomposed sphagnum peat moss, finely divided or of granular texture with 100 percent passing through a 1/2-inch sieve, a pH of 3.4 to 4.8, and a soluble-salt content measured by electrical conductivity of maximum 5 dS/m.

C. Muck Peat: Partially decomposed moss peat, native peat, or reed-sedge peat, finely divided or of granular texture with 100 percent passing through a 1/2-inch sieve, a pH of 6 to 7.5, a soluble-salt content measured by electrical conductivity of maximum 5 dS/m, having a water-absorbing capacity of 1100 to 2000 percent, and containing no sand.

D. Wood Derivatives: Shredded and composted, nitrogen-treated sawdust, ground bark, or wood waste; of uniform texture and free of chips, stones, sticks, soil, or toxic materials.

1. Partially Decomposed Wood Derivatives: In lieu of shredded and composted wood derivatives, mix shredded and partially decomposed wood derivatives with ammonium nitrate at a minimum rate of 0.15 lb/cu. ft. of loose sawdust or ground bark, or with ammonium sulfate at a minimum rate of 0.25 lb/cu. ft. of loose sawdust or ground bark.

E. Manure: Well-rotted, unleached, stable or cattle manure containing not more than 25 percent by volume of straw, sawdust, or other bedding materials; free of toxic substances, stones, sticks, soil, weed seed, debris, and material harmful to plant growth.

2.4 FERTILIZERS

A. Superphosphate: Commercial, phosphate mixture, soluble; a minimum of 20 percent available phosphoric acid.

B. Commercial Fertilizer: Commercial-grade complete fertilizer of neutral character, consisting of fast- and slow-release nitrogen, 50 percent derived from natural organic sources of urea formaldehyde, phosphorous, and potassium in the following composition:

1. Composition: 1 lb/1000 sq. ft. of actual nitrogen, 4 percent phosphorous, and 2 percent potassium, by weight.
2. Composition: Nitrogen, phosphorous, and potassium in amounts recommended in soil reports from a qualified testing agency.

C. Slow-Release Fertilizer: Granular or pelleted fertilizer consisting of 50 percent water-insoluble nitrogen, phosphorus, and potassium in the following composition:

1. Composition: 20 percent nitrogen, 10 percent phosphorous, and 10 percent potassium, by weight.
2. Composition: Nitrogen, phosphorous, and potassium in amounts recommended in soil reports from a qualified testing agency.

D. Chelated Iron: Commercial-grade FeEDDHA for dicots and woody plants, and commercial-grade FeDTPA for ornamental grasses and monocots.

Copyright © 2022 by the American Institute of Landscape Architects. Warning: This AIA MasterSpec based document is protected by U.S. Copyright Law and International Treaties. A valid, current MasterSpec license is required for editing or use of this document.

PART 3 - EXECUTION

3.1 GENERAL

A. Place planting soil and fertilizers according to requirements in other Specification Sections.

B. Verify that no foreign or deleterious material or liquid such as paint, paint washout, concrete slurry, concrete layers or chunks, cement, plaster, oils, gasoline, diesel fuel, paint thinner, turpentine, tar, roofing compound, or acid has been deposited in planting soil.

C. Proceed with placement only after unsatisfactory conditions have been corrected.

3.2 PREPARATION OF UNAMENDED, ON-SITE SOIL BEFORE AMENDING

A. Excavation: Excavate soil from designated area(s) to a depth of 6 inches and stockpile until amended.

B. Unacceptable Materials: Clean soil of concrete slurry, concrete layers or chunks, cement, plaster, building debris, oils, gasoline, diesel fuel, paint thinner, turpentine, tar, roofing compound, acid, and other extraneous materials that are harmful to plant growth.

C. Unsuitable Materials: Clean soil to contain a maximum of 8 percent by dry weight of stones, roots, plants, sod, clay lumps, and pockets of coarse sand.

D. Screening: Pass unamended soil through a 2-inch sieve to remove large materials.

3.3 PLACING AND MIXING PLANTING SOIL OVER EXPOSED SUBGRADE

A. General: Apply and mix unamended soil with amendments on-site to produce required planting soil. Do not apply materials or till if existing soil or subgrade is frozen, muddy, or excessively wet.

B. Subgrade Preparation: Till subgrade to a minimum depth of 12 inches. Remove stones larger than 1-1/2 inches in any dimension and sticks, roots, rubbish, and other extraneous matter and legally dispose of them off District's property.

1. Apply, add soil amendments, and mix approximately half the thickness of unamended soil over prepared, loosened subgrade according to "Mixing" Paragraph below. Mix thoroughly into top 2 inches of subgrade. Spread remainder of planting soil.

C. Mixing: Spread unamended soil to total depth indicated on Drawings, but not less than required to meet finish grades after mixing with amendments and natural settlement. Do not spread if soil or subgrade is frozen, muddy, or excessively wet.

1. Amendments: Apply soil amendments, except compost, and fertilizer, if required, evenly on surface, and thoroughly blend them with unamended soil to produce planting soil.

a. Mix lime and sulfur with dry soil before mixing fertilizer.
b. Mix fertilizer with planting soil no more than seven days before planting.

Copyright © 2022 by the American Institute of Landscape Architects. Warning: This AIA MasterSpec based document is protected by U.S. Copyright Law and International Treaties. A valid, current MasterSpec license is required for editing or use of this document.

2. Lifts: Apply and mix unamended soil and amendments in lifts not exceeding 8 inches 12 inches in loose depth for material compacted by compaction equipment, and not more than 4 inches in loose depth for material compacted by hand-operated tampers.

D. Compaction: Compact each blended lift of planting soil to 75 to 82 percent of maximum Standard Proctor density according to ASTM D698 and tested in-place except where a different compaction value is indicated on Drawings.

E. Finish Grading: Grade planting soil to a smooth, uniform surface plane with loose, uniformly fine texture. Roll and rake, remove ridges, and fill depressions to meet finish grades.

3.4 PLACING MANUFACTURED PLANTING SOIL OVER EXPOSED SUBGRADE

A. General: Apply manufactured soil on-site in its final, blended condition. Do not apply materials or till if existing soil or subgrade is frozen, muddy, or excessively wet.

B. Subgrade Preparation: Till subgrade to a minimum depth of 12 inches. Remove stones larger than 1-1/2 inches in any dimension and sticks, roots, rubbish, and other extraneous matter and legally dispose of them off District's property.

1. Apply approximately half the thickness of planting soil over prepared, loosened subgrade. Mix thoroughly into top 2 inches of subgrade. Spread remainder of planting soil.

C. Application: Spread planting soil to total depth indicated on Drawings, but not less than required to meet finish grades after natural settlement. Do not spread if soil or subgrade is frozen, muddy, or excessively wet.

1. Lifts: Apply planting soil in lifts not exceeding 8 inches in loose depth for material compacted by compaction equipment, and not more than 4 inches in loose depth for material compacted by hand-operated tampers.

D. Compaction: Compact each lift of planting soil to 75 to 82 percent of maximum Standard Proctor density according to ASTM D698 except where a different compaction value is indicated on Drawings.

E. Finish Grading: Grade planting soil to a smooth, uniform surface plane with loose, uniformly fine texture. Roll and rake, remove ridges, and fill depressions to meet finish grades.

3.5 BLENDING PLANTING SOIL IN PLACE

A. General: Mix amendments with in-place, unamended soil to produce required planting soil. Do not apply materials or till if existing soil or subgrade is frozen, muddy, or excessively wet.

B. Preparation: Till unamended, existing soil in planting areas to a minimum depth indicated on Drawings. Remove stones larger than 1-1/2 inches in any dimension and sticks, roots, rubbish, and other extraneous matter and legally dispose of them off District's property.

C. Mixing: Apply soil amendments, except compost, and fertilizer, if required, evenly on surface, and thoroughly blend them into full depth of unamended, in-place soil to produce planting soil.

Copyright © 2022 by the American Institute of Landscape Architects. Warning: This AIA MasterSpec based document is protected by U.S. Copyright Law and International Treaties. A valid, current MasterSpec license is required for editing or use of this document.

1. Mix lime and sulfur with dry soil before mixing fertilizer.
2. Mix fertilizer with planting soil no more than seven days before planting.

D. Compaction: Compact blended planting soil to 75 to 82 percent of maximum Standard Proctor density according to ASTM D698 except where a different compaction value is indicated on Drawings.

E. Finish Grading: Grade planting soil to a smooth, uniform surface plane with loose, uniformly fine texture. Roll and rake, remove ridges, and fill depressions to meet finish grades.

3.6 APPLYING COMPOST TO SURFACE OF PLANTING SOIL

A. Application: Apply compost component of planting-soil mix 6 inches of compost to surface of in-place planting soil. Do not apply materials or till if existing soil or subgrade is frozen, muddy, or excessively wet.

B. Finish Grading: Grade surface to a smooth, uniform surface plane with loose, uniformly fine texture. Roll and rake, remove ridges, and fill depressions to meet finish grades.

3.7 LAYERED SOIL ASSEMBLIES

A. Layered Soil Assembly:

1. Top Layer: Planting-soil type.

3.8 FIELD QUALITY CONTROL

A. Testing Agency: Engage a qualified testing agency to perform tests and inspections.

B. Perform the following tests and inspections:

1. Compaction: Test planting-soil compaction after placing each lift and at completion using a densitometer or soil-compaction meter calibrated to a reference test value based on laboratory testing according to ASTM D698. Space tests at no less than one for each 1000 sq. ft. of in-place soil or part thereof.

C. Soil will be considered defective if it does not pass tests and inspections.

D. Prepare test and inspection reports.

E. Label each sample and test report with the date, location keyed to a site plan or other location system, visible conditions when and where sample was taken, and sampling depth.

3.9 PROTECTION

A. Protection Zone: Identify protection zones according to Section 015639 "Temporary Tree and Plant Protection."

Copyright © 2022 by the American Institute of Landscape Architects. Warning: This AIA MasterSpec based document is protected by U.S. Copyright Law and International Treaties. A valid, current MasterSpec license is required for editing or use of this document.

B. Protect areas of in-place soil from additional compaction, disturbance, and contamination. Prohibit the following practices within these areas except as required to perform planting operations:

1. Storage of construction materials, debris, or excavated material.
2. Parking vehicles or equipment.
3. Vehicle traffic.
4. Foot traffic.
5. Erection of sheds or structures.
6. Impoundment of water.
7. Excavation or other digging unless otherwise indicated.

C. If planting soil or subgrade is over-compacted, disturbed, or contaminated by foreign or deleterious materials or liquids, remove the planting soil and contamination; restore the subgrade as directed by Landscape Architect and replace contaminated planting soil with new planting soil.

3.10 CLEANING

A. Protect areas adjacent to planting-soil preparation and placement areas from contamination. Keep adjacent paving and construction clean and work area in an orderly condition.

B. Remove surplus soil and waste material including excess subsoil, unsuitable materials, trash, and debris and legally dispose of them off District's property unless otherwise indicated.

1. Dispose of excess subsoil and unsuitable materials on-site where directed by District.

END OF SECTION 329113

Copyright © 2022 by the American Institute of Landscape Architects. Warning: This AIA MasterSpec based document is protected by U.S. Copyright Law and International Treaties. A valid, current MasterSpec license is required for editing or use of this document.

SECTION 329200 - TURF AND GRASSES

PART 1 - GENERAL

1.1 RELATED DOCUMENTS

A. Drawings and general provisions of the Contract, including General and Supplementary Conditions and Division 01 Specification Sections, apply to this Section.

1.2 SUMMARY

A. Section Includes:

1. Hydroseeding.
2. Sodding.

B. Related Requirements:

1. Section 329300 "Plants" for trees, shrubs, ground covers, and other plants as well as border edgings and mow strips.

1.3 DEFINITIONS

A. Finish Grade: Elevation of finished surface of planting soil.

B. Pesticide: A substance or mixture intended for preventing, destroying, repelling, or mitigating a pest. Pesticides include insecticides, miticides, herbicides, fungicides, rodenticides, and molluscicides. They also include substances or mixtures intended for use as a plant regulator, defoliant, or desiccant.

C. Pests: Living organisms that occur where they are not desired or that cause damage to plants, animals, or people. Pests include insects, mites, grubs, mollusks (snails and slugs), rodents (gophers, moles, and mice), unwanted plants (weeds), fungi, bacteria, and viruses.

D. Planting Soil: Existing, on-site soil; imported soil; or manufactured soil that has been modified with soil amendments and perhaps fertilizers to produce a soil mixture best for plant growth. See Section 329113 "Soil Preparation" and drawing designations for planting soils.

E. Subgrade: The surface or elevation of subsoil remaining after excavation is complete, or the top surface of a fill or backfill before planting soil is placed.

1.4 PREINSTALLATION MEETINGS

A. Preinstallation Conference: Conduct conference at Project site.

Copyright © 2022 by the American Institute of Architects. Warning: This AIA MasterSpec based document is protected by U.S. Copyright Law and International Treaties. A valid, current MasterSpec license is required for editing or use of this document.

1.5 INFORMATIONAL SUBMITTALS

A. Qualification Data: For landscape Installer.

B. Certification of Grass Seed: From seed vendor for each grass-seed monostand or mixture, stating the botanical and common name, percentage by weight of each species and variety, and percentage of purity, germination, and weed seed. Include the year of production and date of packaging.

1. Certification of each seed mixture for turfgrass sod. Include identification of source and name and telephone number of supplier.

C. Product Certificates: For fertilizers, from manufacturer.

D. Pesticides and Herbicides: Product label and manufacturer's application instructions specific to Project.

1.6 CLOSEOUT SUBMITTALS

A. Maintenance Data: Recommended procedures to be established by District for maintenance of turf during a calendar year. Submit before expiration of required maintenance periods.

1.7 QUALITY ASSURANCE

A. Installer Qualifications: A qualified landscape installer whose work has resulted in successful turf establishment.

1. Professional Membership: Installer shall be a member in good standing of either the National Association of Landscape Professionals or AmericanHort.
2. Experience: Five years' experience in turf installation in addition to requirements in Section 014000 "Quality Requirements."
3. Installer's Field Supervision: Require Installer to maintain an experienced full-time supervisor on Project site when work is in progress.
4. Personnel Certifications: Installer's field supervisor shall have certification in one of the following categories from the National Association of Landscape Professionals:

   a. Landscape Industry Certified Technician - Exterior.
   b. Landscape Industry Certified Lawn Care Manager.
   c. Landscape Industry Certified Lawn Care Technician.

5. Pesticide Applicator: State licensed, commercial.

1.8 DELIVERY, STORAGE, AND HANDLING

A. Seed and Other Packaged Materials: Deliver packaged materials in original, unopened containers showing weight, certified analysis, name and address of manufacturer, and indication of compliance with state and Federal laws, as applicable.

Copyright © 2022 by the American Institute of Architects. Warning: This AIA MasterSpec based document is protected by U.S. Copyright Law and International Treaties. A valid, current MasterSpec license is required for editing or use of this document.

B. Sod: Harvest, deliver, store, and handle sod according to requirements in "Specifications for Turfgrass Sod Materials" and "Specifications for Turfgrass Sod Transplanting and Installation" sections in TPI's "Guideline Specifications to Turfgrass Sodding." Deliver sod within 24 hours of harvesting and in time for planting promptly. Protect sod from breakage and drying.

C. Bulk Materials:

1. Do not dump or store bulk materials near structures, utilities, walkways and pavements, or on existing turf areas or plants.
2. Provide erosion-control measures to prevent erosion or displacement of bulk materials; discharge of soil-bearing water runoff; and airborne dust reaching adjacent properties, water conveyance systems, or walkways.
3. Accompany each delivery of bulk materials with appropriate certificates.

1.9 FIELD CONDITIONS

A. Planting Restrictions: Plant during one of the following periods. Coordinate planting periods with initial maintenance periods to provide required maintenance from date of Substantial Completion.

B. Weather Limitations: Proceed with planting only when existing and forecasted weather conditions permit planting to be performed when beneficial and optimum results may be obtained. Apply products during favorable weather conditions according to manufacturer's written instructions.

PART 2 - PRODUCTS

2.1 SEED

A. Grass Seed: Fresh, clean, dry, new-crop seed complying with AOSA's "Rules for Testing Seeds" for purity and germination tolerances.

B. Seed Species: as specified on Drawings.

1. Quality, State Certified: State-certified seed of grass species as listed below for solar exposure.
2. Quality, Non-State Certified: Seed of grass species as listed below for solar exposure, with not less than 85 percent germination, not less than 95 percent pure seed, and not more than 0.5 percent weed seed:

2.2 TURFGRASS SOD

A. Turfgrass Sod: Certified, complying with "Specifications for Turfgrass Sod Materials" in TPI's "Guideline Specifications to Turfgrass Sodding." Furnish viable sod of uniform density, color, and texture that is strongly rooted and capable of vigorous growth and development when planted.

B. Turfgrass Species, Warm-Season Grass: As specified on Drawings.

Copyright © 2022 by the American Institute of Architects. Warning: This AIA MasterSpec based document is protected by U.S. Copyright Law and International Treaties. A valid, current MasterSpec license is required for editing or use of this document.

2.3 FERTILIZERS

A. Commercial Fertilizer: Commercial-grade complete fertilizer of neutral character, consisting of fast- and slow-release nitrogen, 50 percent derived from natural organic sources of urea formaldehyde, phosphorous, and potassium in the following composition:

1. Composition:

a. 1 lb/1000 sq. ft. of actual nitrogen, 4 percent phosphorous, and 2 percent potassium, by weight.
b. Nitrogen, phosphorous, and potassium in amounts recommended in soil reports from a qualified soil-testing laboratory.

B. Slow-Release Fertilizer: Granular or pelleted fertilizer consisting of 50 percent water-insoluble nitrogen, phosphorus, and potassium in the following composition:

1. Composition:

a. 20 percent nitrogen, 10 percent phosphorous, and 10 percent potassium, by weight.
b. Nitrogen, phosphorous, and potassium in amounts recommended in soil reports from a qualified soil-testing laboratory.

2.4 MULCHES

A. Straw Mulch: Provide air-dry, clean, mildew- and seed-free, salt hay or threshed straw of wheat, rye, oats, or barley.

B. Compost Mulch: Well-composted, stable, and weed-free organic matter, pH range of 5.5 to 8; moisture content 35 to 55 percent by weight; 100 percent passing through 1-inch sieve; soluble salt content of 2 to 5 decisiemens/m; not exceeding 0.5 percent inert contaminants and free of substances toxic to plantings; and as follows:

1. Organic Matter Content: 50 to 60 percent of dry weight.

2.5 PESTICIDES

A. General: Pesticide, registered and approved by the EPA, acceptable to authorities having jurisdiction, and of type recommended by manufacturer for each specific problem and as required for Project conditions and application. Do not use restricted pesticides unless authorized in writing by authorities having jurisdiction.

B. Pre-Emergent Herbicide (Selective and Nonselective): Effective for controlling the germination or growth of weeds within planted areas at the soil level directly below the mulch layer.

C. Post-Emergent Herbicide (Selective and Nonselective): Effective for controlling weed growth that has already germinated.

Copyright © 2022 by the American Institute of Architects. Warning: This AIA MasterSpec based document is protected by U.S. Copyright Law and International Treaties. A valid, current MasterSpec license is required for editing or use of this document.

PART 3 - EXECUTION

3.1 EXAMINATION

A. Examine areas to be planted for compliance with requirements and other conditions affecting installation and performance of the Work.

1. Verify that no foreign or deleterious material or liquid such as paint, paint washout, concrete slurry, concrete layers or chunks, cement, plaster, oils, gasoline, diesel fuel, paint thinner, turpentine, tar, roofing compound, or acid has been deposited in soil within a planting area.
2. Suspend planting operations during periods of excessive soil moisture until the moisture content reaches acceptable levels to attain the required results.
3. Uniformly moisten excessively dry soil that is not workable or which is dusty.

B. Proceed with installation only after unsatisfactory conditions have been corrected.

C. If contamination by foreign or deleterious material or liquid is present in soil within a planting area, remove the soil and contamination as directed by Landscape Architect and replace with new planting soil.

3.2 PREPARATION

A. Protect structures; utilities; sidewalks; pavements; and other facilities, trees, shrubs, and plantings from damage caused by planting operations.

1. Protect adjacent and adjoining areas from hydroseeding and hydromulching overspray.
2. Protect grade stakes set by others until directed to remove them.

B. Install erosion-control measures to prevent erosion or displacement of soils and discharge of soil-bearing water runoff or airborne dust to adjacent properties and walkways.

3.3 TURF AREA PREPARATION

A. General: Prepare planting area for soil placement and mix planting soil according to Section 329113 "Soil Preparation."

B. Placing Planting Soil: Place manufactured planting soil over exposed subgrade.

1. Reduce elevation of planting soil to allow for soil thickness of sod.

C. Moisten prepared area before planting if soil is dry. Water thoroughly and allow surface to dry before planting. Do not create muddy soil.

D. Before planting, obtain Landscape Architect's acceptance of finish grading; restore planting areas if eroded or otherwise disturbed after finish grading.

Copyright © 2022 by the American Institute of Architects. Warning: This AIA MasterSpec based document is protected by U.S. Copyright Law and International Treaties. A valid, current MasterSpec license is required for editing or use of this document.

3.4 HYDROSEEDING

A. Hydroseeding: Mix specified seed, commercial fertilizer, and fiber mulch in water, using equipment specifically designed for hydroseed application. Continue mixing until uniformly blended into homogeneous slurry suitable for hydraulic application.

1. Mix slurry with fiber-mulch manufacturer's recommended tackifier.
2. Spray-apply slurry uniformly to all areas to be seeded in a one-step process. Apply slurry at a rate so that mulch component is deposited at not less than 1500-lb/acre dry weight, and seed component is deposited at not less than the specified seed-sowing rate.
3. Spray-apply slurry uniformly to all areas to be seeded in a two-step process. Apply first slurry coat at a rate so that mulch component is deposited at not less than 500-lb/acre dry weight, and seed component is deposited at not less than the specified seed-sowing rate. Apply slurry cover coat of fiber mulch (hydromulching) at a rate of 1000 lb/acre.

3.5 SODDING

A. Lay sod within 24 hours of harvesting unless a suitable preservation method is accepted by Landscape Architect prior to delivery time. Do not lay sod if dormant or if ground is frozen or muddy.

B. Lay sod to form a solid mass with tightly fitted joints. Butt ends and sides of sod; do not stretch or overlap. Stagger sod strips or pads to offset joints in adjacent courses. Avoid damage to soil or sod during installation. Tamp and roll lightly to ensure contact with soil, eliminate air pockets, and form a smooth surface. Work sifted soil or fine sand into minor cracks between pieces of sod; remove excess to avoid smothering sod and adjacent grass.

1. Lay sod across slopes exceeding 1:3.
2. Anchor sod on slopes exceeding 1:6 with wood pegs or steel staples spaced as recommended by sod manufacturer but not less than two anchors per sod strip to prevent slippage.

C. Saturate sod with fine water spray within two hours of planting. During first week after planting, water daily or more frequently as necessary to maintain moist soil to a minimum depth of 1-1/2 inches below sod.

3.6 TURF RENOVATION

A. Renovate existing turf where indicated.

B. Renovate turf damaged by Contractor's operations, such as storage of materials or equipment and movement of vehicles.

1. Reestablish turf where settlement or washouts occur or where minor regrading is required.
2. Install new planting soil as required.

C. Remove sod and vegetation from diseased or unsatisfactory turf areas; do not bury in soil.

Copyright © 2022 by the American Institute of Architects. Warning: This AIA MasterSpec based document is protected by U.S. Copyright Law and International Treaties. A valid, current MasterSpec license is required for editing or use of this document.

D. Remove topsoil containing foreign materials, such as oil drippings, fuel spills, stones, gravel, and other construction materials resulting from Contractor's operations, and replace with new planting soil.

E. Mow, dethatch, core aerate, and rake existing turf.

F. Remove weeds before seeding. Where weeds are extensive, apply selective herbicides as required. Do not use pre-emergence herbicides.

G. Remove waste and foreign materials, including weeds, soil cores, grass, vegetation, and turf, and legally dispose of them off District's property.

H. Till stripped, bare, and compacted areas thoroughly to a soil depth of 6 inches.

I. Apply soil amendments and initial fertilizer required for establishing new turf and mix thoroughly into top 4 inches of existing soil. Install new planting soil to fill low spots and meet finish grades.

1. Soil Amendment(s): according to requirements of Section 329113 "Soil Preparation."
2. Initial Fertilizer: Commercial fertilizer applied according to manufacturer's recommendations.

J. Apply seed and protect with straw mulch as required for new turf.

K. Water newly planted areas and keep moist until new turf is established.

3.7 TURF MAINTENANCE

A. General: Maintain and establish turf by watering, fertilizing, weeding, mowing, trimming, replanting, and performing other operations as required to establish healthy, viable turf. Roll, regrade, and replant bare or eroded areas and remulch to produce a uniformly smooth turf. Provide materials and installation the same as those used in the original installation.

1. Fill in as necessary soil subsidence that may occur because of settling or other processes. Replace materials and turf damaged or lost in areas of subsidence.
2. In areas where mulch has been disturbed by wind or maintenance operations, add new mulch and anchor as required to prevent displacement.
3. Apply treatments as required to keep turf and soil free of pests and pathogens or disease. Use integrated pest management practices whenever possible to minimize the use of pesticides and reduce hazards.

B. Watering: Install and maintain temporary piping, hoses, and turf-watering equipment to convey water from sources and to keep turf uniformly moist to a depth of 4 inches.

1. Schedule watering to prevent wilting, puddling, erosion, and displacement of seed or mulch. Lay out temporary watering system to avoid walking over muddy or newly planted areas.
2. Water turf with fine spray at a minimum rate of 1 inch per week unless rainfall precipitation is adequate.

Copyright © 2022 by the American Institute of Architects. Warning: This AIA MasterSpec based document is protected by U.S. Copyright Law and International Treaties. A valid, current MasterSpec license is required for editing or use of this document.

C. Mow turf as soon as top growth is tall enough to cut. Repeat mowing to maintain specified height without cutting more than one-third of grass height. Remove no more than one-third of grass-leaf growth in initial or subsequent mowings. Do not delay mowing until grass blades bend over and become matted. Do not mow when grass is wet. Schedule initial and subsequent mowings to maintain a 4” grass height:

D. Turf Postfertilization: Apply commercial fertilizer after initial mowing and when grass is dry.

1. Use fertilizer that provides actual nitrogen of at least 1 lb/1000 sq. ft. to turf area.

3.8 SATISFACTORY TURF

A. Turf installations shall meet the following criteria as determined by Landscape Architect:

1. Satisfactory Seeded Turf: At end of maintenance period, a healthy, uniform, close stand of grass has been established, free of weeds and surface irregularities, with coverage exceeding 90 percent over any 10 sq. ft. and bare spots not exceeding 5 by 5 inches.
2. Satisfactory Sodded Turf: At end of maintenance period, a healthy, well-rooted, even-colored, viable turf has been established, free of weeds, open joints, bare areas, and surface irregularities.
3. Satisfactory Plugged Turf: At end of maintenance period, the required number of plugs has been established as well-rooted, viable patches of grass, and areas between plugs are free of weeds and other undesirable vegetation.
4. Satisfactory Sprigged Turf: At end of maintenance period, the required number of sprigs has been established as well-rooted, viable plants, and areas between sprigs are free of weeds and other undesirable vegetation.

B. Use specified materials to reestablish turf that does not comply with requirements, and continue maintenance until turf is satisfactory.

3.9 PESTICIDE APPLICATION

A. Apply pesticides and other chemical products and biological control agents according to requirements of authorities having jurisdiction and manufacturer's written recommendations. Coordinate applications with District's operations and others in proximity to the Work. Notify District before each application is performed.

B. Post-Emergent Herbicides (Selective and Nonselective): Apply only as necessary to treat already-germinated weeds and according to manufacturer's written recommendations.

3.10 CLEANUP AND PROTECTION

A. Promptly remove soil and debris created by turf work from paved areas. Clean wheels of vehicles before leaving site to avoid tracking soil onto roads, walks, or other paved areas.

B. Remove surplus soil and waste material, including excess subsoil, unsuitable soil, trash, and debris, and legally dispose of them off District's property.

Copyright © 2022 by the American Institute of Architects. Warning: This AIA MasterSpec based document is protected by U.S. Copyright Law and International Treaties. A valid, current MasterSpec license is required for editing or use of this document.

C. Erect temporary fencing or barricades and warning signs as required to protect newly planted areas from traffic. Maintain fencing and barricades throughout initial maintenance period and remove after plantings are established.

D. Remove nondegradable erosion-control measures after grass establishment period.

3.11 MAINTENANCE SERVICE

A. Turf Maintenance Service: Provide full maintenance by skilled employees of landscape Installer. Maintain as required in "Turf Maintenance" Article. Begin maintenance immediately after each area is planted and continue until acceptable turf is established, but for not less than the following periods:

1. Seeded Turf: 180 days from date of Substantial Completion.

    a. When initial maintenance period has not elapsed before end of planting season, or if turf is not fully established, continue maintenance during next planting season.

2. Sodded Turf: 180 days from date of Substantial Completion.

END OF SECTION 329200

Copyright © 2022 by the American Institute of Architects. Warning: This AIA MasterSpec based document is protected by U.S. Copyright Law and International Treaties. A valid, current MasterSpec license is required for editing or use of this document.

SECTION 329300 - PLANTS

PART 1 - GENERAL

1.1 SUMMARY

A. Section Includes:

1. Plant materials.
2. Fertilizers.
3. Mulches.
4. Herbicides and pesticides.
5. Tree-stabilization materials.
6. Root barriers.

B. Requirements:

1. Section 015639 "Temporary Tree and Plant Protection" for protecting, trimming, pruning, repairing, and replacing existing trees to remain that interfere with, or are affected by, execution of the Work.
2. Section 328400 "Planting Irrigation" for complete irrigation systems.
3. Section 329200 "Turf and Grasses" for turf (lawn) and meadow planting, hydroseeding, and erosion-control materials.

1.2 COORDINATION

A. Coordination with Turf Areas (Lawns): Plant trees, shrubs, and other plants after finish grades are established and before planting turf areas unless otherwise indicated.

1. When planting trees, shrubs, and other plants after planting turf areas, protect turf areas, and promptly repair damage caused by planting operations.

1.3 PREINSTALLATION MEETINGS

A. Preinstallation Conference: Conduct conference at Project site.

1.4 ACTION SUBMITTALS

A. Product Data:

1. Plant materials.
2. Fertilizers.
3. Mulches.
4. Herbicides and pesticides.
5. Tree-stabilization materials.
6. Root barriers.

Copyright © 2022 by the American Institute of Architects. Warning: This AIA MasterSpec based document is protected by U.S. Copyright Law and International Treaties. A valid, current MasterSpec license is required for editing or use of this document.

B. Product Data Submittals: For each product.

1. Plant Materials: Include quantities, sizes, quality, and verified sources for plant materials.

C. Samples for Verification: Actual sample of finished products for each of the following:

1. Organic Mulch: 1-quart volume of each organic mulch required; typical of the lot of material to be furnished, in sealed plastic bags labeled with composition of materials by percentage of weight and source of mulch. Provide an accurate representation of color, texture, and organic makeup.
2. Weed-Control Barrier: 12 by 12 inches.
3. Proprietary Root-Ball-Stabilization Device: One unit.
4. Slow-Release, Tree-Watering Device: One unit of each size required.
5. Edging Materials and Accessories: Manufacturer's standard size, to verify color selected.
6. Root Barrier: Width of panel by 12 inches.

1.5 INFORMATIONAL SUBMITTALS

A. Field Quality-Control Reports: Percolation tests for tree pits. Include the following:

1. Tree identification number matching the plans.
2. Date of test.
3. Time when water was added to tree pit to start percolation test.
4. Time with photo documentation showing increments of testing with water level in tree pit.
5. Identification of tester.

B. Qualification Statements: For landscape Installer. Include list of similar projects completed by Installer demonstrating Installer's capabilities and experience. Include project names, addresses, and year completed, and include names and addresses of owners' contact persons.

C. Product Certificates: For each type of manufactured product, from manufacturer, and complying with manufacturer's certified analysis of standard products.

D. Pesticides and Herbicides: Product label and manufacturer's written application instructions specific to Project.

E. Sample Warranty: For special warranty.

1.6 CLOSEOUT SUBMITTALS

A. Maintenance Data: Recommended procedures to be established by District for maintenance of plants during a calendar year. Submit before expiration of required maintenance periods.

B. Plant Material Warranty: Submit warranty of plant material for one year.

Copyright © 2022 by the American Institute of Architects. Warning: This AIA MasterSpec based document is protected by U.S. Copyright Law and International Treaties. A valid, current MasterSpec license is required for editing or use of this document.

1.7 QUALITY ASSURANCE

A. Installer Qualifications: A qualified landscape installer whose work has resulted in successful establishment of plants.

1. Professional Membership: Member in good standing of either the National Association of Landscape Professionals or AmericanHort.
2. Experience: Five years' experience in landscape installation in addition to requirements in Section 014000 "Quality Requirements."
3. Installer's Field Supervision: Maintain an experienced full-time supervisor on Project site when work is in progress.
4. Personnel Certification: Installer's field supervisor personnel assigned to the Work certified in one of the following categories from the National Association of Landscape Professionals:

    a. Landscape Industry Certified Technician - Exterior.
    b. Landscape Industry Certified Horticultural Technician.

5. Pesticide Applicator: State licensed, commercial.

B. Provide quality, size, genus, species, and variety of plants indicated, complying with applicable requirements in ANSI Z60.1.

1. Selection of plants purchased under allowances is made by Landscape Architect, who tags plants at their place of growth before they are prepared for transplanting.

C. Measurements: Measure in accordance with ANSI Z60.1. Do not prune to obtain required sizes.

1. Trees and Shrubs: Measure with branches and trunks or canes in their normal position. Take height measurements from or near the top of the root flare for field-grown stock and container-grown stock. Measure main body of tree or shrub for height and spread; do not measure branches or roots tip to tip. Take caliper measurements 6 inches above the root flare for trees up to 4-inch caliper size, and 12 inches above the root flare for larger sizes.
2. Other Plants: Measure with stems, petioles, and foliage in their normal position.

D. Plant Material Observation: Landscape Architect may observe plant material either at place of growth or at site before planting for compliance with requirements for genus, species, variety, cultivar, size, and quality. Landscape Architect may also observe trees and shrubs further for size and condition of balls and root systems, pests, disease symptoms, injuries, and latent defects and may reject unsatisfactory or defective material at any time during progress of work. Remove rejected trees or shrubs immediately from Project site.

1. Notify Landscape Architect of sources of planting materials seven days in advance of delivery to site.

1.8 DELIVERY, STORAGE, AND HANDLING

A. Packaged Materials: Deliver packaged materials in original, unopened containers showing weight, certified analysis, name and address of manufacturer, and indication of compliance with state and Federal laws if applicable.

Copyright © 2022 by the American Institute of Architects. Warning: This AIA MasterSpec based document is protected by U.S. Copyright Law and International Treaties. A valid, current MasterSpec license is required for editing or use of this document.

B. Bulk Materials:

1. Do not dump or store bulk materials near structures, utilities, or walkways and pavements; or on existing turf areas or plants.
2. Provide erosion-control measures to prevent erosion or displacement of bulk materials; discharge of soil-bearing water runoff; and airborne dust reaching adjacent properties, water conveyance systems, or walkways.
3. Accompany each delivery of bulk materials with appropriate certificates.

C. Deliver bare-root stock plants within 24 hours of digging. Immediately after digging up bare-root stock, pack root system in wet straw, hay, or other suitable material to keep root system moist until planting. Transport in covered, temperature-controlled vehicles, and keep plants cool and protected from sun and wind at all times.

D. Do not prune trees and shrubs before delivery. Protect bark, branches, and root systems from sun scald, drying, wind burn, sweating, whipping, and other handling and tying damage. Do not bend or bind-tie trees or shrubs in such a manner as to destroy their natural shape. Provide protective covering of plants during shipping and delivery. Do not drop plants during delivery and handling.

E. Handle planting stock by root ball.

F. Store bulbs, corms, and tubers in a dry place at 60 to 65 deg F until planting.

G. Apply antidesiccant to trees and shrubs using power spray to provide an adequate film over trunks (before wrapping), branches, stems, twigs, and foliage to protect during digging, handling, and transportation.

1. If deciduous trees or shrubs are moved in full leaf, spray with antidesiccant at nursery before moving and again two weeks after planting.

H. Wrap trees and shrubs with burlap fabric over trunks, branches, stems, twigs, and foliage to protect from wind and other damage during digging, handling, and transportation.

I. Deliver plants after preparations for planting have been completed, and install immediately. If planting is delayed more than six hours after delivery, set plants and trees in their appropriate aspect (sun, filtered sun, or shade), protect from weather and mechanical damage, and keep roots moist.

1. Heel-in bare-root stock. Soak roots that are in less than moist condition in water for two hours. Reject plants with dry roots.
2. Set balled stock on ground and cover ball with soil, peat moss, sawdust, or other acceptable material.
3. Do not remove container-grown stock from containers before time of planting.
4. Water root systems of plants stored on-site deeply and thoroughly with a fine-mist spray. Water as often as necessary to maintain root systems in a moist, but not overly wet condition.

Copyright © 2022 by the American Institute of Architects. Warning: This AIA MasterSpec based document is protected by U.S. Copyright Law and International Treaties. A valid, current MasterSpec license is required for editing or use of this document.

1.9 FIELD CONDITIONS

A. Field Measurements: Verify actual grade elevations, service and utility locations, irrigation system components, and dimensions of plantings and construction contiguous with new plantings by field measurements before proceeding with planting work.

B. Planting Restrictions: Plant during one of the following periods. Coordinate planting periods with maintenance periods to provide required maintenance from date of Substantial Completion.

C. Weather Limitations: Proceed with planting only when existing and forecasted weather conditions permit planting to be performed when beneficial and optimum results may be obtained. Apply products during favorable weather conditions in accordance with manufacturer's written instructions and warranty requirements.

1.10 WARRANTY

A. Special Warranty: Installer agrees to repair or replace plantings and accessories that fail in materials, workmanship, or growth within specified warranty period.

1. Failures include, but are not limited to, the following:

   a. Death and unsatisfactory growth, except for defects resulting from abuse, lack of adequate maintenance, or neglect by District.
   b. Structural failures, including plantings falling or blowing over.
   c. Faulty performance of tree stabilization.
   d. Deterioration of metals, metal finishes, and other materials beyond normal weathering.

2. Warranty Periods: From date of Substantial Completion.

   a. Trees, Shrubs, Vines, and Ornamental Grasses: 180 days.
   b. Ground Covers, Biennials, Perennials, and Other Plants: 180 days.

3. Include the following remedial actions as a minimum:

   a. Immediately remove dead plants and replace unless required to plant in the succeeding planting season.
   b. Replace plants that are more than 25 percent dead or in an unhealthy condition at end of warranty period.
   c. A limit of one replacement of each plant is required except for losses or replacements due to failure to comply with requirements.
   d. Provide extended warranty for period equal to original warranty period, for replaced plant material.

Copyright © 2022 by the American Institute of Architects. Warning: This AIA MasterSpec based document is protected by U.S. Copyright Law and International Treaties. A valid, current MasterSpec license is required for editing or use of this document.

PART 2 - PRODUCTS

2.1 PLANT MATERIALS

A. General: Furnish nursery-grown plants true to genus, species, variety, cultivar, stem form, shearing, and other features indicated in Plant List, Plant Schedule, or Plant Legend indicated on Drawings and complying with ANSI Z60.1; and with healthy root systems developed by transplanting or root pruning. Provide well-shaped, fully branched, healthy, vigorous stock, densely foliated when in leaf and free of disease, pests, eggs, larvae, and defects such as knots, sun scald, injuries, abrasions, and disfigurement.

1. Trees with damaged, crooked, or multiple leaders; with tight vertical branches where bark is squeezed between two branches or between branch and trunk ("included bark"); with crossing trunks; with cut-off limbs more than 3/4 inch in diameter; or with stem girdling roots are unacceptable.
2. Collected Stock: Do not use plants harvested from the wild, from native stands, from an established landscape planting, or not grown in a nursery unless otherwise indicated.

B. Provide plants of sizes, grades, and ball or container sizes complying with ANSI Z60.1 for types and form of plants required. Plants of a larger size may be used if acceptable to Landscape Architect, with a proportionate increase in size of roots or balls.

C. Root-Ball Depth: Furnish trees and shrubs with root balls measured from top of root ball, which begins at root flare in accordance with ANSI Z60.1.

D. Labeling: Label at least one plant of each variety, size, and caliper with a securely attached, waterproof tag bearing legible designation of common name and full scientific name, including genus and species. Include nomenclature for hybrid, variety, or cultivar, if applicable for plant.

E. If formal arrangements or consecutive order of plants is indicated on Drawings, select stock for uniform height and spread, and number the labels to ensure symmetry in planting.

2.2 FERTILIZERS

A. Granular Fertilizer: Commercial-grade complete fertilizer of neutral character, consisting of fast- and slow-release nitrogen, 50 percent derived from natural organic sources of urea formaldehyde, phosphorous, and potassium in the following composition:

1. Composition:

a. 0.75 lb/1000 sq. ft. 3 percent of actual nitrogen, 4 percent phosphorous, and 3 percent potassium, by weight.
b. Nitrogen, phosphorous, and potassium in amounts recommended in soil reports from a qualified soil-testing laboratory.

B. Mycorrhizal Fungi: Dry, granular inoculant containing at least 5300 spores per lb of vesicular-arbuscular mycorrhizal fungi and 95 million spores per lb of ectomycorrhizal fungi, 33 percent hydrogel, and maximum of 5.5 percent inert material.

Copyright © 2022 by the American Institute of Architects. Warning: This AIA MasterSpec based document is protected by U.S. Copyright Law and International Treaties. A valid, current MasterSpec license is required for editing or use of this document.

2.3 MULCHES

A. Organic Mulch: Free from deleterious materials and suitable as a top dressing of trees and shrubs, consisting of one of the following:

1. Type: Ground or shredded bark.
2. Size Range: 3 inches maximum, 1/2 inch minimum.
3. Color: per plan.

B. Compost Mulch: Well-composted, stable, and weed-free organic matter, pH of 5.5 to 8; moisture content 35 to 55 percent by weight; 100 percent passing through a 1-inch sieve; soluble-salt content of 2 to 5 dS/m; not exceeding 0.5 percent inert contaminants and free of substances toxic to plantings; and as follows:

1. Organic Matter Content: 50 to 60 percent of dry weight.
2. Feedstock: Agricultural, food, or industrial residuals; biosolids; yard trimmings; or source-separated or compostable mixed solid waste.

2.4 HERBICIDES AND PESTICIDES

A. Pre-Emergent Herbicide (Selective and Nonselective): Effective for controlling the germination or growth of weeds within planted areas at the soil level directly below the mulch layer.

B. Post-Emergent Herbicide (Selective and Nonselective): Effective for controlling weed growth that has already germinated.

C. Pesticides: Registered and approved by the EPA, acceptable to authorities having jurisdiction, and of type recommended in writing by manufacturer for each specific problem and as required for Project conditions and application. Do not use restricted pesticides unless authorized in writing by authorities having jurisdiction.

2.5 TREE-STABILIZATION MATERIALS

A. Trunk-Stabilization Materials:

1. Upright and Guy Stakes: Rough-sawn, sound, new softwood with specified wood pressure-preservative treatment, free of knots, holes, cross grain, and other defects, 2-by-2-inch nominal by length indicated, pointed at one end.
2. Flexible Ties: Wide rubber or elastic bands or straps of length required to reach stakes or turnbuckles.
3. Flags: Standard surveyor's plastic flagging tape, white, 6 inches long.
4. Proprietary Staking-and-Guying Devices: Proprietary stake or anchor and adjustable tie systems to secure each new planting by plant stem; sized as indicated and in accordance with manufacturer's written instructions.

Copyright © 2022 by the American Institute of Architects. Warning: This AIA MasterSpec based document is protected by U.S. Copyright Law and International Treaties. A valid, current MasterSpec license is required for editing or use of this document.

2.6 MISCELLANEOUS PRODUCTS

A. Root Barrier: Black, molded, modular panels 24 inches high (deep), 85 mils thick, and with vertical root deflecting ribs protruding 3/4 inch out from panel surface; manufactured with minimum 50 percent recycled polyethylene plastic with UV inhibitors.

PART 3 - EXECUTION

3.1 EXAMINATION

A. Examine areas to receive plants, with Installer present, for compliance with requirements and conditions affecting installation and performance of the Work.

1. Verify that no foreign or deleterious material or liquid such as paint, paint washout, concrete slurry, concrete layers or chunks, cement, plaster, oils, gasoline, diesel fuel, paint thinner, turpentine, tar, roofing compound, or acid has been deposited in soil within a planting area.
2. Verify that plants and vehicles loaded with plants can travel to planting locations with adequate overhead clearance.
3. Suspend planting operations during periods of excessive soil moisture until moisture content reaches acceptable levels to attain required results.
4. Uniformly moisten excessively dry soil that is not workable or which is dusty.

B. If contamination by foreign or deleterious material or liquid is present in soil within a planting area, remove soil and contamination as directed by Landscape Architect and replace with new planting soil.

C. Proceed with installation only after unsatisfactory conditions have been corrected.

3.2 PREPARATION

A. Protect structures, utilities, sidewalks, pavements, and other facilities and turf areas and existing plants from damage caused by planting operations.

B. Install erosion-control measures to prevent erosion or displacement of soils and discharge of soil-bearing water runoff or airborne dust to adjacent properties and walkways.

C. Lay out individual tree and shrub locations and areas for multiple plantings. Stake locations, outline areas, adjust locations when requested, and obtain Landscape Architect's acceptance of layout before excavating or planting. Make minor adjustments as required.

D. Lay out plants at locations directed by Landscape Architect. Stake locations of individual trees and shrubs and outline areas for multiple plantings.

Copyright © 2022 by the American Institute of Architects. Warning: This AIA MasterSpec based document is protected by U.S. Copyright Law and International Treaties. A valid, current MasterSpec license is required for editing or use of this document.

3.3 PLANTING AREA ESTABLISHMENT

A. General: Prepare planting area for soil placement and mix planting soil in accordance with Section 329113 "Soil Preparation."

B. Placing Planting Soil: Place manufactured planting soil over exposed subgrade.

C. Before planting, obtain Landscape Architect's acceptance of finish grading; restore planting areas if eroded or otherwise disturbed after finish grading.

D. Application of Mycorrhizal Fungi: At time directed by Landscape Architect, broadcast dry product uniformly over prepared soil at application rate indicated on Drawings.

3.4 EXCAVATION FOR TREES AND SHRUBS

A. Planting Pits and Trenches: Excavate circular planting pits.

1. Excavate planting pits with sides sloping inward at a 45-degree angle. Excavations with vertical sides are unacceptable. Trim perimeter of bottom leaving center area of bottom raised slightly to support root ball and assist in drainage away from center. Do not further disturb base. Ensure that root ball will sit on undisturbed base soil to prevent settling. Scarify sides of planting pit smeared or smoothed during excavation.
2. Excavate approximately three times as wide as ball diameter for container-grown stock.
3. Excavate at least 12 inches wider than root spread and deep enough to accommodate vertical roots for bare-root stock.
4. Do not excavate deeper than depth of root ball, measured from the root flare to the bottom of root ball.
5. If area under the plant was initially dug too deep, add soil to raise it to correct level and thoroughly tamp the added soil to prevent settling.
6. Maintain angles of repose of adjacent materials to ensure stability. Do not excavate subgrades of adjacent paving, structures, hardscapes, or other new or existing improvements.
7. Maintain supervision of excavations during working hours.
8. Keep excavations covered or otherwise protected when unattended by Installer's personnel.

B. Backfill Soil: Subsoil and topsoil removed from excavations may be used as backfill soil unless otherwise indicated.

C. Obstructions: Notify Landscape Architect if unexpected rock or obstructions detrimental to trees or shrubs are encountered in excavations.

1. Hardpan Layer: Drill 6-inch- diameter holes, 24 inches apart, into free-draining strata or to depth of 10 ft., whichever is less, and backfill with free-draining material.

D. Drainage: Notify Landscape Architect if subsoil conditions evidence unexpected water seepage or retention in tree or shrub planting pits.

E. Fill excavations with water and allow to percolate away before positioning trees and shrubs.

Copyright © 2022 by the American Institute of Architects. Warning: This AIA MasterSpec based document is protected by U.S. Copyright Law and International Treaties. A valid, current MasterSpec license is required for editing or use of this document.

3.5 TREE, SHRUB, AND VINE PLANTING

A. Inspection: At time of planting, verify that root flare is visible at top of root ball in accordance with ANSI Z60.1. If root flare is not visible, remove soil in a level manner from root ball to where the top-most root emerges from the trunk. After soil removal to expose root flare, verify that root ball still meets size requirements.

B. Roots: Remove stem girdling roots and kinked roots. Remove injured roots by cutting cleanly; do not break.

C. Container-Grown Stock: Set each plant plumb and in center of planting pit or trench with root flare 1 inch above adjacent finish grades.

1. Backfill: Planting soil.
2. Carefully remove root ball from container without damaging root ball or plant.
3. Backfill around root ball in layers, tamping to settle soil and eliminate voids and air pockets. When planting pit is approximately one-half filled, water thoroughly before placing remainder of backfill. Repeat watering until no more water is absorbed.
4. Distribute granular fertilizer around each planting pit when pit is approximately one-half filled. Do not place in bottom of the hole.
5. Continue backfilling process. Water again after placing and tamping final layer of soil.

D. Slopes: When planting on slopes, set the plant so the root flare on the uphill side is flush with the surrounding soil on the slope; the edge of root ball on the downhill side will be above the surrounding soil. Apply enough soil to cover the downhill side of root ball.

3.6 MECHANIZED TREE-SPADE PLANTING

A. Plant trees with approved mechanized tree spade at designated locations. Do not use tree spade to move trees larger than maximum size allowed for similar field-grown, balled-and-burlapped, root-ball diameter in accordance with ANSI Z60.1, or trees larger than manufacturer's maximum size recommendation for tree spade being used, whichever is smaller.

B. Use same tree spade to excavate the planting hole as will be used to extract and transport the tree.

C. When extracting tree, center the trunk within the tree spade and move tree with solid ball of earth.

D. Cut exposed roots cleanly during transplanting operations.

E. Plant trees following procedures in "Tree, Shrub, and Vine Planting" Article.

F. Where possible, orient the tree in same direction as in its original location.

3.7 TREE, SHRUB, AND VINE PRUNING

A. Remove only dead, dying, or broken branches. Do not prune for shape.

Copyright © 2022 by the American Institute of Architects. Warning: This AIA MasterSpec based document is protected by U.S. Copyright Law and International Treaties. A valid, current MasterSpec license is required for editing or use of this document.

B. Prune, thin, and shape trees, shrubs, and vines as directed by Landscape Architect.

C. Prune, thin, and shape trees, shrubs, and vines in accordance with standard professional horticultural and arboricultural practices. Unless otherwise indicated by Landscape Architect, do not cut tree leaders; remove only injured, dying, or dead branches from trees and shrubs; and prune to retain natural character.

D. Do not apply pruning paint to wounds.

3.8 INSTALLATION OF TREE-STABILIZATION MATERIALS

A. Trunk Stabilization by Upright Staking and Tying: Install trunk stabilization as follows unless otherwise indicated:

1. Upright Staking and Tying:

   a. Stake trees of 2- through 5-inch caliper. Stake trees of less than 2-inch caliper only as required to prevent wind tip out. Use a minimum of two stakes of length required to penetrate at least 18 inches below bottom of backfilled excavation and to extend to the dimension indicated on Drawings above grade. Set vertical stakes and space to avoid penetrating root balls or root masses.
   b. Stake trees with two stakes for trees up to 12 ft. high and 2-1/2 inches or less in caliper; three stakes for trees less than 14 ft. high and up to 4 inches in caliper. Space stakes equally around trees.

2. Support trees with bands of flexible ties at contact points with tree trunk. Allow enough slack to avoid rigid restraint of tree.
3. Support trees with two strands of tie wire, connected to the brass grommets of tree-tie webbing at contact points with tree trunk. Allow enough slack to avoid rigid restraint of tree.

3.9 INSTALLATION OF ROOT BARRIER

A. Install root barrier where trees are planted within 60 inches of paving or other hardscape elements, such as walls, curbs, and walkways, unless otherwise indicated on Drawings.

B. Align root barrier vertically, and run it linearly along and adjacent to paving or other hardscape elements to be protected from invasive roots.

C. Install root barrier continuously for distance of 60 inches in each direction from tree trunk, for total distance of 10 ft. per tree. If trees are spaced closer, use single continuous piece of root barrier.

1. Position top of root barrier 1/2 inch above finish grade.
2. Overlap root barrier minimum of 12 inches at joints.
3. Do not distort or bend root barrier during construction activities.
4. Do not install root barrier surrounding the root ball of tree.

Copyright © 2022 by the American Institute of Architects. Warning: This AIA MasterSpec based document is protected by U.S. Copyright Law and International Treaties. A valid, current MasterSpec license is required for editing or use of this document.

3.10 GROUND COVER AND PLANT PLANTING

A. Set out and space ground cover and plants other than trees, shrubs, and vines as indicated on Drawings in even rows with triangular spacing.

B. Use planting soil for backfill.

C. Dig holes large enough to allow spreading of roots.

D. For rooted cutting plants supplied in flats, plant each in a manner that minimally disturbs the root system but to depth not less than two nodes.

E. Work soil around roots to eliminate air pockets and leave slight saucer indentation around plants to hold water.

F. Water thoroughly after planting, taking care not to cover plant crowns with wet soil.

G. Protect plants from hot sun and wind; remove protection if plants show evidence of recovery from transplanting shock.

3.11 INSTALLATION OF MULCHES

A. Install weed-control barriers before mulching in accordance with manufacturer's written instructions. Completely cover area to be mulched, overlapping edges minimum of 6 inches, and secure seams with galvanized pins.

B. Mulch backfilled surfaces of planting areas and other areas indicated.

1. Trees and Treelike Shrubs in Turf Areas: Apply organic mulch ring of 3-inch average thickness, with 12-inch radius around trunks or stems. Do not create a mulch cone or place mulch within 3 inches of trunks or stems.
2. Organic Mulch in Planting Areas: Apply 3-inch average thickness of organic mulch over whole surface of planting area, and finish level with adjacent finish grades. Do not place mulch within 6 inches of trunks or stems.

3.12 APPLICATION OF HERBICIDES AND PESTICIDES

A. Pre-Emergent Herbicides (Selective and Nonselective): Apply to tree, shrub, and ground-cover areas in accordance with manufacturer's written instructions. Do not apply to seeded areas.

B. Post-Emergent Herbicides (Selective and Nonselective): Apply only as necessary to treat already-germinated weeds and in accordance with manufacturer's written instructions.

C. Apply pesticides and other chemical products and biological control agents according to authorities having jurisdiction and in accordance with manufacturer's written instructions. Coordinate applications with District's operations and others in proximity to the Work. Notify District before each application is performed.

Copyright © 2022 by the American Institute of Architects. Warning: This AIA MasterSpec based document is protected by U.S. Copyright Law and International Treaties. A valid, current MasterSpec license is required for editing or use of this document.

3.13 PLANT MAINTENANCE

A. Maintain plantings by pruning, cultivating, watering, weeding, fertilizing, mulching, restoring planting saucers, adjusting and repairing tree-stabilization devices, resetting to proper grades or vertical position, and performing other operations as required to establish healthy, viable plantings.

B. Fill in, as necessary, soil subsidence that may occur because of settling or other processes. Replace mulch materials damaged or lost in areas of subsidence.

C. Apply treatments as required to keep plant materials, planted areas, and soils free of pests and pathogens or disease. Use integrated pest management practices when possible to minimize use of pesticides and reduce hazards. Treatments include physical controls such as hosing off foliage, mechanical controls such as traps, and biological control agents.

3.14 FIELD QUALITY CONTROL

A. Testing Agency: Engage a qualified testing agency to perform tests and inspections.

B. Tests and Inspections:

1. Perform tree pit percolation tests.
2. Tree pit construction will be considered defective if it does not pass percolation tests and inspections.
3. Do not proceed with planting in tree pits until satisfactory percolation is demonstrated.

C. Prepare test and inspection reports.

3.15 REPAIR AND REPLACEMENT

A. Repair or replace existing or new trees and other plants that are damaged by construction operations, in a manner approved by Landscape Architect.

1. Submit details of proposed pruning and repairs.
2. Perform repairs of damaged trunks, branches, and roots within 24 hours, if approved.
3. Replace trees and other plants that cannot be repaired and restored to full-growth status, as determined by Landscape Architect.

B. Remove and replace trees that are more than 25 percent dead or in unhealthy condition before end of corrections period or are damaged during construction operations that Landscape Architect determines are incapable of restoring to normal growth pattern.

3.16 CLEANING AND PROTECTION

A. During planting, keep adjacent paving and construction clean and work area in an orderly condition. Clean wheels of vehicles before leaving site to avoid tracking soil onto roads, walks, or other paved areas.

Copyright © 2022 by the American Institute of Architects. Warning: This AIA MasterSpec based document is protected by U.S. Copyright Law and International Treaties. A valid, current MasterSpec license is required for editing or use of this document.

B. Remove surplus soil and waste material including excess subsoil, unsuitable soil, trash, and debris and legally dispose of them off District's property.

C. Protect plants from damage due to landscape operations and operations of other contractors and trades. Maintain protection during installation and maintenance periods. Treat, repair, or replace damaged plantings.

D. After installation and before Substantial Completion, remove nursery tags, nursery stakes, tie tape, labels, wire, burlap, and other debris from plant material, planting areas, and Project site.

E. At time of Substantial Completion, verify that tree-watering devices are in good working order and leave them in place. Replace improperly functioning devices.

END OF SECTION 329300

Copyright © 2022 by the American Institute of Architects. Warning: This AIA MasterSpec based document is protected by U.S. Copyright Law and International Treaties. A valid, current MasterSpec license is required for editing or use of this document.

APPENDIX A

SIERRA CREEK PARK
ANTELOPE, CALIFORNIA

GEOTECHNICAL EXPLORATION

SUBMITTED TO
Ms. Karen Folsom
O'Dell Engineering
1165 Scenic Drive, Suite A
Modesto, CA 95350

PREPARED BY
ENGEO Incorporated

December 12, 2022

PROJECT NO.
21219.000.001

Copyright © 2022 by ENGEO Incorporated. This document may not be reproduced in whole or in part by any means whatsoever, nor may it be quoted or excerpted without the express written consent of ENGEO Incorporated.

ENGEO
Expect Excellence

Project No.
21219.000.001

December 12, 2022

Ms. Karen Folsom
O'Dell Engineering
1165 Scenic Drive, Suite A
Modesto, CA 95350

Subject: Sierra Creek Park
Watt Avenue
Antelope, California

GEOTECHNICAL EXPLORATION

Dear Ms. Folsom:

With your authorization, we completed this geotechnical exploration report for the proposed park located in Antelope, California. The accompanying geotechnical exploration report compiles our field exploration together with our conclusions and recommendations regarding development within the study area.

We believe that the project site is suitable for the proposed development provided the recommendations of this report are incorporated into the project design and implemented during construction.

We are pleased to have been of service to you on this project and will continue to consult with you and your design team as the project planning progresses. If you have any questions regarding the information included in the report, please do not hesitate to contact us.

Sincerely,

ENGEO Incorporated

Connor Dunn

Steve Harris, GE

REGISTERED PROFESSIONAL ENGINEER
STEVE HARRIS
No. 2804
GEOTECHNICAL
STATE OF CALIFORNIA

cd/sdh/ca

TABLE OF CONTENTS

LETTER OF TRANSMITTAL

1.0 INTRODUCTION 1

1.1 PURPOSE AND SCOPE 1
1.2 PROJECT LOCATION AND DESCRIPTION 1

2.0 FINDINGS 1

2.1 GEOLOGY 1
2.2 SEISMICITY 1
2.3 FIELD EXPLORATION 2

2.3.1 Borings 2

2.4 SURFACE CONDITIONS 3
2.5 SUBSURFACE CONDITIONS 3
2.6 GROUNDWATER CONDITIONS 3
2.7 PERCOLATION TESTING 3

2.7.1 Percolation Testing Results 4

2.8 LABORATORY TESTING 4

3.0 CONCLUSIONS 4

3.1 EXPANSIVE SOIL 4
3.2 SEISMIC HAZARDS 5

3.2.1 Ground Rupture 5
3.2.2 Ground Shaking 5
3.2.3 Liquefaction 6

3.3 FLOODING 6
3.4 2022 CBC SEISMIC DESIGN PARAMETERS 6

4.0 CONSTRUCTION MONITORING 7

5.0 EARTHWORK RECOMMENDATIONS 8

5.1 DEMOLITION AND STRIPPING 8
5.2 OVER-OPTIMUM SOIL MOISTURE CONDITIONS 8
5.3 ACCEPTABLE FILL 8
5.4 ENGINEERED FILL COMPACTION 9

5.4.1 Grading in Structural Areas 9
5.4.2 Underground Utility Backfill 9

5.5 SLOPE GRADIENTS 10
5.6 SITE DRAINAGE 10

6.0 CONVENTIONAL FOUNDATION RECOMMENDATIONS 10

6.1 SPREAD FOOTINGS 10

6.1.1 Footing Dimensions and Allowable Bearing Capacity 10
6.1.2 Foundation Lateral Resistance 11
6.1.3 Settlement 11

7.0 DEEP FOUNDATION RECOMMENDATIONS 11

TABLE OF CONTENTS (Continued)

7.1 DRILLED PIERS 12

8.0 SLABS-ON-GRADE 12

8.1 EXTERIOR FLATWORK 12

9.0 RETAINING WALL AND SOUND WALL RECOMMENDATIONS 13

9.1 LATERAL SOIL PRESSURES 13
9.2 RETAINING WALL DRAINAGE 13
9.3 BACKFILL 14
9.4 FOUNDATIONS 14

10.0 PAVEMENT DESIGN 14

10.1 FLEXIBLE PAVEMENTS 14
10.1 SUBGRADE AND AGGREGATE BASE COMPACTION 15

11.0 LIMITATIONS AND UNIFORMITY OF CONDITIONS 15

SELECTED REFERENCES

FIGURES

APPENDIX A – Boring Logs

APPENDIX B – Laboratory Test Data

1.0 INTRODUCTION

1.1 PURPOSE AND SCOPE

We prepared this geotechnical exploration report for design of the planned park improvements in Antelope, California. The purpose of this geotechnical exploration report is to provide conclusions and recommendations regarding site development and foundation recommendations for the proposed development. The scope of our services included a review of available literature and geologic maps for the immediate area, field exploration including six borings and two percolation tests, laboratory testing, geotechnical data analysis, and report preparation summarizing our recommendations for site development.

In preparation of this report, we reviewed the Sierra Creek Park Proposed Concept Plan by AECOM (no date) and the Sierra Creek Park Fact Sheet.

We prepared this report exclusively for O'Dell Engineering and their design team consultants. We should review any changes made in the character, design, or layout of the development to modify the conclusions and recommendations contained in this report, as necessary. This document may not be reproduced in whole or in part by any means whatsoever, nor may it be quoted or excerpted without our express written consent.

1.2 PROJECT LOCATION AND DESCRIPTION

Figure 1 displays a Site Vicinity Map. The proposed 7.2-acre park is located southeast of Watt Avenue and northwest of Spinelli Elementary School. The site currently consists of vacant land and has been historically vacant for decades according to historical aerial photos. A seasonal creek runs through the center of the site. Figure 2 shows the site boundaries and our exploration locations.

We understand the proposed improvements will include two pedestrian bridges over the existing creek, a playground, shade structures, a park fence/wall, a restroom building, a parking lot, underground utilities, and associated improvements. Structural loads are yet to be determined; however, we assume that structural loads will be representative for this type of construction.

2.0 FINDINGS

2.1 GEOLOGY

Wagner, et al. (1981) mapped the surficial soil of the subject site as the Turlock Lake Formation (Qtl – Figure 3). This soil is described as Early Pleistocene-aged deposits that consist predominantly of granitic alluvium. This formation represents eroded alluvial fans derived primarily from the plutonic rocks of the Sierra Nevada to the east.

2.2 SEISMICITY

The site is located in a seismically active region. The site is not located within a currently designated Alquist-Priolo Earthquake Fault Zone and no known surface expressions of active faults are believed to exist within the site. An active fault is defined by the State Mining and Geology Board (California Geological Survey, 2007) as one that has had surface displacement within Holocene time (about the last 11,000 years). According to the 2008 National Seismic

Hazard Maps Spatial Query, the two nearest earthquake faults from the center of the site designated as active seismic sources are the Great Valley Fault, located approximately 35 miles west, and the Hunting Creek-Berryessa Fault, located approximately 47 miles west. Other active seismic sources in the region are summarized in the table below. Figure 4 shows the approximate locations of these faults and significant historic earthquake epicenters recorded within the region.

TABLE 2.2-1: Active Faults Capable of Producing Significant Ground Shaking at the Site Latitude: 38.7084961, Longitude: -121.386491

FAULT NAME	DISTANCE FROM SITE (MILES)	DIRECTION FROM SITE	MAXIMUM MOMENT MAGNITUDE
Great Valley	35	West	6.9
Hunting Creek-Berryessa	47	West	7.1
Green Valley Connected	49	West	6.8
West Napa	57	West	6.7
Greenville Connected	62	West	7.0
Calaveras	70	West	7.0
Hayward-Rodgers Creek	71	West	7.3

Portions of the Great Valley fault are considered seismically active blind thrust faults; however, since the fault segments are not known to extend to the ground surface, the fault is not defined as active by the State Mining and Geology Board according to the definition above and the State of California has not defined Earthquake Fault Zones around postulated traces.

The Great Valley fault is considered capable of causing significant ground shaking at the site, but the recurrence interval is believed longer than for more distant, strike-slip faults. Recent studies suggest that this boundary fault may have been the cause of the Vacaville-Winters earthquake sequence of April 1892 (Eaton, 1986; Wong and Biggar, 1989; Moores and others, 1991). Other large (>M_W7) earthquakes have historically occurred in the Bay Area to the west and along the margins of the Central Valley and many earthquakes of low magnitude occur every year.

2.3 FIELD EXPLORATION

Our field exploration included drilling six borings and performing two percolation tests at the locations shown on the Site Plan, Figure 2. We performed our field exploration on November 14 and November 18, 2022. The location and elevations of our explorations are approximate and were estimated by using mobile GPS and GIS applications on handheld devices; they should be considered accurate only to the degree implied by the method used.

2.3.1 Borings

An ENGEO representative observed the drilling and logged the subsurface conditions at each boring location. We retained a truck-mounted Soil Test Ranger drill rig equipped with a 4½-inch-diameter solid flight auger. The borings were advanced to a maximum depth of approximately 26 feet below existing grade.

Soil samples were collected at frequent intervals using either a 3-inch outside-diameter (O.D.) California-type split-spoon sampler fitted with 6-inch-long brass liners, or a 2-inch O.D. Standard Penetration Test (SPT) split-spoon sampler. The samplers were advanced with a 140-pound hammer with a 30-inch drop, employing a rope-and-cathead hammer system. The penetration of the sampler was field recorded as the number of blows needed to drive the sampler 18 inches in 6-inch

increments. The boring logs show the number of blows required for the last 1 foot of penetration, or the number of blows per depth of penetration for samples that met driving refusal. The blow counts depicted on the boring logs have not been converted using any correction factors.

We used the field logs to develop the final logs presented in Appendix A. The logs depict subsurface conditions within the borings at the time the exploration was conducted. Subsurface conditions at other locations may differ from conditions noted at these locations. The passage of time may result in altered subsurface conditions. In addition, stratification lines represent the approximate boundaries between soil types and the transitions may be gradual.

2.4 SURFACE CONDITIONS

We observed the following site features during our field exploration.

- The majority of the site was covered in short grasses.
- A seasonal creek ran through the northern portion of the site that was approximately 4 to 5 feet below adjacent ground level. Water was visible at the bottom of the creek.
- Several large trees were located along the perimeter of the property.
- There was a perimeter fence surrounding the park south of Watt Avenue.

Please refer to the Site Plan, Figure 2, for more information on site features.

2.5 SUBSURFACE CONDITIONS

The soil encountered in our explorations generally consisted of sand with varying amounts of fines and sandy silt interbedded with occasional layers of silt to the maximum depth explored of approximately 26 feet below existing ground surface. The near-surface soil generally consisted of low to moderately expansive silty sand to sandy lean clay with plasticity indexes ranging from 3 to 29.

Consult the Site Plan and exploration logs for specific subsurface conditions at each location. We include our exploration logs in Appendix A. The profiles graphically depict the subsurface conditions encountered at the time of the exploration.

2.6 GROUNDWATER CONDITIONS

Static or perched groundwater was not encountered in any of our subsurface explorations. We reviewed United States Geological Survey (USGS) and California Department of Water Resource (DWR) monitored wells in the vicinity of the project area. Groundwater appears to be over 100 feet deep in the surrounding site area. Fluctuations in the level of groundwater may occur due to variations in rainfall, irrigation practice, and other factors not evident at the time measurements were made.

2.7 PERCOLATION TESTING

We installed and performed two percolation tests at the locations shown on the Site Plan, Figure 2. The percolation test holes extended to depths of approximately 5 and 10 feet below the ground surface respectively. The test holes were drilled using a drill rig equipped with a 4-diameter solid-flight auger.

Preparation of the percolation test holes began by placing approximately 2 inches of fine gravel in the bottom of the holes. A 3-inch-diameter perforated PVC pipe was then placed in the test holes and surrounded by gravel. The holes were pre-soaked overnight prior to testing, with measurement of the percolation rate occurring the following day.

To perform the percolation test, we measured the time until a relatively stable percolation rates were achieved. Municipal drinking water was used for the percolation testing. It is our opinion that the percolation rate of drinking water should be similar to stormwater. The result of the percolation tests is discussed below.

2.7.1 Percolation Testing Results

The following infiltration rates are based on a falling head percolation test where measurements are recorded for the time it took the water level to drop from a depth of approximately 12 inches from the bottom of the hole to a depth of approximately 6 inches from the bottom of the hole. Infiltration in the lateral and vertical direction is inherent in the rates provided below.

Based on our measured field test results, we converted the uncorrected field percolation rates to infiltration rates using Porchet's Method (Inverse Borehole Method) as summarized in Table 2.7.1-1 below.

TABLE 2.7.1-1: Percolation Testing Results

PERCOLATION TEST HOLE	DEPTH (FEET)	RAW FIELD PERCOLATION RATE (INCHES/HOUR)	CONVERTED PORCHET DESGIN INFILTRATION RATE (INCHES/HOUR)	SOIL TYPE
1-P01	10	9.6	0.4	Clayey Sand
1-P02	5	1.2	0.04	Sandy Silt

2.8 LABORATORY TESTING

We performed laboratory tests on selected soil samples from our test pits to evaluate their engineering properties. For this project, we performed moisture content, dry density, sieve, plasticity index, and unconfined compression testing. Laboratory test results are included in Appendix B.

3.0 CONCLUSIONS

Based on the results of our exploration and analysis, it is our opinion that construction at the site is feasible from a geotechnical standpoint. It is our opinion that the geotechnical concerns may be mitigated if our recommendations are incorporated in the design of the project and implemented during construction. The primary geotechnical concern that could affect development on the site is the presence of moderately expansive surficial soil.

3.1 EXPANSIVE SOIL

We observed potentially expansive sandy lean clay near the surface of the site in one of our borings. Our laboratory testing indicates that the soil exhibits moderate shrink/swell potential with variations in moisture content.

Expansive soil change in volume with changes in moisture. It can shrink or swell and cause heaving and cracking of slabs-on-grade, pavements, and structures founded on shallow foundations. Structure damage due to volume changes associated with expansive soil can be reduced by (1) using a rigid mat foundation that is designed to resist the settlement and heave of expansive soil, (2) deepening the foundations to below the zone of moisture fluctuation, i.e. by using deep footings or drilled piers, and/or (3) using footings at normal shallow depths but bottomed on a layer of select fill having a low expansion potential.

Based on our limited field exploration, the only structure to be founded in the area identified to have surficial expansive soil is the shade structure/picnic area. We are assuming the shade structure will be founded on a drilled pier foundation, so no expansive soil mitigation is required. According to our boring logs, all other structures should be founded on non-expansive soil (plasticity index of 12 or less). Surficial soil conditions should be confirmed by ENGEO during grading to ensure that structures founded on shallow foundations have a minimum of 18 inches of non-expansive material below the foundation pads. If this condition is not met, then non-expansive material may be sourced from the site or imported.

We provide specific grading recommendations for compaction of expansive soil at the site. The purpose of these recommendations is to reduce the swell potential of the soil by compacting at a higher moisture content and controlling the amount of compaction. Expansive soil mitigation recommendations are presented in Section 5 of this report.

3.2 SEISMIC HAZARDS

Potential seismic hazards resulting from a nearby moderate to major earthquake can generally be classified as primary and secondary. The primary seismic hazard is ground rupture, also called surface faulting. The common secondary seismic hazards include ground shaking, liquefaction, and ground lurching. The following sections present a discussion of these hazards as they apply to the site. Based on topographic and lithologic data, the risk of regional subsidence or uplift is considered low to negligible at the site.

3.2.1 Ground Rupture

Since there are no known active faults crossing the property and the site is not located within an Earthquake Fault Special Study Zone, it is our opinion that ground rupture is unlikely at the subject property.

3.2.2 Ground Shaking

An earthquake of moderate to high magnitude generated within the San Francisco Bay Region could cause considerable ground shaking at the site, similar to that which has occurred in the past. To mitigate the shaking effects, all structures should be designed using sound engineering judgment and the current California Building Code (CBC) requirements, as a minimum. Seismic design provisions of current building codes generally prescribe minimum lateral forces, applied statically to the structure, combined with the gravity forces of dead-and-live loads. The code-prescribed lateral forces are generally considered to be substantially smaller than the comparable forces that would be associated with a major earthquake. Therefore, structures should be able to: (1) resist minor earthquakes without damage, (2) resist moderate earthquakes without structural damage but with some nonstructural damage, and (3) resist major earthquakes without collapse but with some structural as well as nonstructural damage. Conformance to the current building code recommendations does not constitute any kind of guarantee that significant

structural damage would not occur in the event of a maximum magnitude earthquake; however, it is reasonable to expect that a well-designed and well-constructed structure will not collapse or cause loss of life in a major earthquake (SEAOC, 1996).

3.2.3 Liquefaction

Soil liquefaction results from loss of strength during cyclic loading, such as imposed by earthquakes. Soil most susceptible to liquefaction is clean, loose, saturated, uniformly graded fine sand below the groundwater table. Empirical evidence indicates that loose silty sand is also potentially liquefiable. When seismic ground shaking occurs, the soil is subjected to cyclic shear stresses that can cause excess hydrostatic pressures to develop. If excess hydrostatic pressures exceed the effective confining stress from the overlying soil, the sand may undergo deformation. If the sand undergoes virtually unlimited deformation without developing significant resistance, it is said to have liquefied, and if the sand consolidates or vents to the surface during and following liquefaction, ground settlement and surface deformation may occur. In some cases, settlements of approximately 2 to 3 percent of the thickness of the liquefiable layer have been measured.

Based on the deep groundwater levels discussed in Section 2.6, it is our opinion that liquefaction-induced settlements will be negligible.

3.3 FLOODING

Based on review of the FEMA flood zone map, the subject development is designated as Flood Zone X. This signifies an area of minimal flood hazard. The civil engineer should review pertinent information relating to possible flood levels for the subject site based on final pad elevations and provide appropriate design measures for development of the project, if necessary.

3.4 2022 CBC SEISMIC DESIGN PARAMETERS

The 2022 CBC utilizes seismic design criteria established in the ASCE/SEI Standard "Minimum Design Loads and Associated Criteria for Buildings and Other Structures," (ASCE 7-16). Based on the subsurface conditions encountered, we characterized the site as Site Class D.

ASCE 7-16 requires a site-specific ground-motion hazard analysis for Site Class D sites with a mapped S_1 value greater than or equal to 0.2. However, Section 11.4.8 of ASCE 7-16 and Supplement No. 3 provide an exception to this requirement. A site-specific ground-motion hazard analysis is not required where the value of the parameter S_{M1} determined by Equation 11.4-2 and shown in Table 3.5-1 is increased by 50 percent for developing the mapped Risk-Targeted Maximum Considered Earthquake (MCE_R) spectral response, calculating S_{D1}, and evaluating C_s in accordance with Chapter 12 of ASCE 7-16.

In Table 3.4-1 below, we provide the 2022 CBC seismic parameters based on the United States Geological Survey's (USGS') Seismic Design Maps for your use. When using this table, considerations should be given to exceptions in Section 11.4.8 of ASCE 7-16, as described in this report.

TABLE 3.4-1: 2022 CBC Seismic Design Parameters, Latitude: 38.7084961, Longitude: -121.386491

PARAMETER	VALUE
Site Class	D
Mapped MCE_R Spectral Response Acceleration at Short Periods, S_S (g)	0.48
Mapped MCE_R Spectral Response Acceleration at 1-second Period, S_1 (g)	0.23
Site Coefficient, F_A	1.42
Site Coefficient, F_V	2.14*
MCE_R Spectral Response Acceleration at Short Periods, S_{MS} (g)	0.68
MCE_R Spectral Response Acceleration at 1-second Period, S_{M1} (g)	0.49*
Design Spectral Response Acceleration at Short Periods, S_{DS} (g)	0.45
Design Spectral Response Acceleration at 1-second Period, S_{D1} (g)	0.33*
Mapped MCE Geometric Mean (MCE_G) Peak Ground Acceleration, PGA (g)	0.20
Site Coefficient, F_{PGA}	1.40
MCE_G Peak Ground Acceleration adjusted for Site Class effects, PGA_M (g)	0.28
Long period transition-period, T_L (sec)	12

*The parameters above should only be used for calculation of T_s, determination of Seismic Design Category, and, when taking the exceptions under Items 1 and 2 of ASCE 7-16 Section 11.4.8. (Supplement Number 3 https://ascelibrary.org/doi/epdf/10.1061/9780784414248.sup3).

We recommend that we collaborate with the structural engineer of record to further evaluate the effects of taking the exception on the structural design and identify the need for performing a site-specific ground-motion hazard analysis. We can prepare a proposal for a site-specific ground-motion hazard analysis, if requested.

4.0 CONSTRUCTION MONITORING

Our experience and that of our profession clearly indicate that the risk of costly design, construction, and maintenance problems can be significantly lowered by retaining the design geotechnical engineering firm to:

1. Review the project plans and specifications prior to construction to determine whether our recommendations have been implemented, and to provide additional or modified recommendations, if necessary. This also allows us to check if any changes have occurred in the nature, design, or location of the proposed improvements and provides the opportunity to prepare a written response with updated recommendations.

2. Perform construction monitoring to check the validity of the assumptions we made to prepare this report. All earthwork operations should be performed under the observation of our representative to check that the site is properly prepared, the selected fill materials are satisfactory, and that placement and compaction of the fill has been performed in accordance with our recommendations and the project specifications. Sufficient notification to us prior to earthwork is essential.

If we are not retained to perform the services described above, then we are not responsible for any party's interpretation of our report (and subsequent addenda, letters, and verbal discussions).

5.0 EARTHWORK RECOMMENDATIONS

The relative compaction and optimum moisture content of soil and aggregate base referred to in this report are based on the most recent ASTM D1557 test method. Compacted soil is not acceptable if it is unstable. It should exhibit only minimal flexing or pumping, as determined by an ENGEO representative.

As used in this report, the term "moisture condition" refers to adjusting the moisture content of the soil by either drying if too wet or adding water if too dry.

We define "structural areas" in Section 5 of this report as any area sensitive to settlement of compacted soil. These areas include, but are not limited to buildings, pedestrian bridges, shade structures, sidewalks, pavement areas, and retaining walls.

5.1 DEMOLITION AND STRIPPING

Areas to be developed should be cleared of all surface and subsurface deleterious materials, including vegetation, designated trees, buried utility lines, buried irrigation lines and debris. Excavations extending below the planned finished site grades should be cleaned and backfilled with suitable material compacted to the recommendations presented in Section 5.5. ENGEO should be retained to observe and test all backfilling.

The surface vegetation should be cut as close to the surface as possible and removed from the site. The remaining vegetation should be thoroughly disked or mulched into the upper 12 inches of the site soil until ENGEO determines that the soil is adequately mixed. If desired, ENGEO can evaluate site vegetation at the time of grading to determine the feasibility of mulching organics in place.

5.2 OVER-OPTIMUM SOIL MOISTURE CONDITIONS

The contractor should anticipate encountering excessively over-optimum (wet) soil moisture conditions during winter or spring grading, or during or following periods of rain. Wet soil can make proper compaction difficult or impossible.

Wet soil conditions can be mitigated by:

1. Frequent spreading and mixing during warm dry weather,
2. Mixing with drier materials,
3. Stabilizing with aggregate or geotextile stabilization fabric, or both.

We should evaluate Option 3 for approval prior to implementation.

5.3 ACCEPTABLE FILL

On-site material is suitable as fill material provided it is processed to remove concentrations of organic material, debris, and particles greater than 8 inches in maximum dimension.

Imported fill materials should meet the above requirements and have a plasticity index less than or equal to 12. Allow us to sample and test proposed imported fill materials at least 5 days prior to delivery to the site.

5.4 ENGINEERED FILL COMPACTION

5.4.1 Grading in Structural Areas

Perform subgrade compaction prior to fill placement, following cutting operations, and in areas left at grade as follows. Expansive soil is defined as having a plasticity index greater than 12. Non-expansive soil is defined as having a plasticity index of 12 or lower.

1. Scarify to a depth of at least 8 inches.
2. Moisture condition soil to at least 3 percentage points over the optimum moisture content for expansive soil and to at least 1 percentage point over the optimum moisture content for non-expansive soil.
3. Compact the soil to a minimum of 90 percent relative compaction. Compact the upper 6 inches of finish pavement subgrade to at least 95 percent relative compaction prior to aggregate base placement.

After the subgrade has been compacted, place and compact acceptable fill as follows.

1. Spread fill in loose lifts that do not exceed 8 inches.
2. Moisture condition lifts to at least 3 percentage points over the optimum moisture content for expansive fill and to at least 1 percentage point over the optimum moisture content for non-expansive fill.
3. Compact fill to a minimum of 90 percent relative compaction; compact the upper 6 inches of fill in pavement areas to at least 95 percent relative compaction prior to aggregate base placement.

Compact the pavement Caltrans Class 2 Aggregate Base section to at least 95 percent relative compaction (ASTM D1557). Moisture condition aggregate base to or slightly above the optimum moisture content prior to compaction.

5.4.2 Underground Utility Backfill

Place and compact trench backfill as follows.

1. Trench backfill should have a maximum particle size of 6 inches.
2. Moisture condition trench backfill to at least 3 percentage points over the optimum moisture content for expansive soil and to at least 1 percentage point over the optimum moisture content for non-expansive soil. Moisture condition backfill outside the trench.
3. Place fill in loose lifts not exceeding 12 inches.
4. Compact fill to a minimum of 90 percent relative compaction (ASTM D1557).

The contractor is responsible for conducting trenching and shoring in accordance with CALOSHA requirements. Project consultants involved in utility design should specify pipe-bedding materials.

Jetting of backfill is not an acceptable means of compaction.

5.5 SLOPE GRADIENTS

Slopes less than 5 feet high may be constructed at 2:1 (horizontal:vertical) or flatter. The contractor is responsible to construct temporary construction slopes in accordance with CALOSHA requirements.

5.6 SITE DRAINAGE

The project civil engineer is responsible for designing surface drainage improvements. With regard to geotechnical engineering issues, we recommend that finish grades be sloped away from buildings and pavements to the maximum extent practical to reduce the potentially damaging effects of expansive soil. As a minimum, we recommend that water is not allowed to pond near foundations, pavements, or exterior flatwork.

6.0 CONVENTIONAL FOUNDATION RECOMMENDATIONS

We developed structural improvement recommendations using data obtained from our field exploration, laboratory testing, and engineering analysis.

6.1 SPREAD FOOTINGS

The proposed restroom structure and the two pedestrian bridges can be supported on continuous or isolated spread footings. The restroom structure should be underlain by a minimum of 18 inches of non-expansive material. The non-expansive material can be sourced from the site or imported and should meet the criteria described in Section 5.3.

As an alternative to shallow foundations, the two pedestrian bridges may be supported on drilled piers according to the recommendations contained in Section 7.0 below.

6.1.1 Footing Dimensions and Allowable Bearing Capacity

Conventional footings may be designed according to the following design criteria; however, these recommendations should be reviewed by ENGEO following site grading and when building plans become available.

TABLE 6.1.1-1: Minimum Footing Dimensions

FOOTING TYPE	*MINIMUM DEPTH (INCHES)	MINIMUM WIDTH (INCHES)
Continuous	**24**	**18**
Isolated	**24**	**24**

*below lowest adjacent pad grade

Minimum footing depths shown above are taken from lowest adjacent pad grade. Design foundations recommended above for a maximum allowable bearing pressure of 2,500 pounds per square foot (psf) for dead-plus-live loads. Increase this bearing capacity by one-third for the short-term effects of wind or seismic loading.

During construction, footing trenches should be cleared of loose materials and debris. In addition, soil exposed in footing excavations should not be allowed to desiccate prior to placing concrete. ENGEO's field representative should observe and approve the footing excavations prior to concrete placement.

The maximum allowable bearing pressure is a net value; the weight of the footing may be neglected for design purposes. Footings located adjacent to utility trenches should have their bearing surfaces below an imaginary 1:1 (horizontal:vertical) plane projected upward from the bottom edge of the trench to the footing.

6.1.2 Foundation Lateral Resistance

Lateral loads may be resisted by friction along the base and by passive pressure along the sides of foundations. The passive pressure is based on an equivalent fluid pressure in pounds per cubic foot (pcf). We recommend the following allowable values for design:

- Passive Lateral Pressure: 300 pcf (may be applied below a depth of 1 foot)
- Coefficient of Friction: 0.30

Increase the above values by one-third for the short-term effects of wind or seismic loading. When combined with friction, half of the passive pressure should be used.

For the pedestrian bridges, the ground should be level for at least 10 feet in front of the foundations in order to utilize passive resistance. If the footings are within 10 feet of the creek slope, then they should be deepened until the point at which there is a 10 foot horizontal distance to daylight. If this is not feasible, then deep foundations should be considered as described below.

6.1.3 Settlement

Provided our report recommendations are followed and given the proposed construction (Section 1.2), we estimate total and differential static settlements will be minimal. Additionally, we anticipate the majority of settlement will occur during construction and commissioning. Once foundation sizes and loading are determined, we can provide updated total and differential static settlement estimates under separate cover if necessary.

Liquefaction-induced settlements are estimated to be negligible based on the depth to groundwater in the vicinity of the site.

7.0 DEEP FOUNDATION RECOMMENDATIONS

The proposed pedestrian bridges and shade structures may be supported on drilled, cast-in-place, straight-shaft friction piers.

7.1 DRILLED PIERS

The following design criteria should be incorporated into the structural design for the proposed foundations. Actual foundation depths should be determined by the shade structure designer based on structural design considerations.

- Pier diameter: Minimum 12 inches.
- Maximum allowable skin friction: 500 pounds per square foot (psf). Ignore the upper 12 inches for design of vertical support of piers.
- Pier uplift capacity: The allowable pier uplift capacity may be determined using a side friction of 375 psf plus the weight of the pier.

Lateral loads may be resisted by passive pressure along the sides of foundations. An equivalent fluid weight of 300 pounds per cubic foot acting on 2 times the pier diameter and on the face of the pier cap may be used to evaluate passive resistance if the area in front of the pier is level for at least 10 feet; the upper 1 foot of pier embedment should be neglected for passive resistance pressure unless confined by pavement or slab. For sloping ground conditions at the creek, passive resistance should be ignored until the point at which there is a 10 foot horizontal distance to daylight, or until the depth of the creek bed, whichever comes first. For foundation depths greater than 12 feet, apply a maximum pressure limit of 2,500 pounds per square foot (psf). For foundation depths less than 12 feet, there is no maximum lateral pressure limit. Pier reinforcements should be designed by the structural engineer and constructed to meet the minimum requirements stipulated by ACI 318.

The bottom of the pier excavation should be dry, clean, and free of loose soil before reinforcing steel is installed and concrete is placed. We recommend that the excavation of the piers be performed under our direct observation to establish that the pier is founded in suitable material and constructed in accordance with the recommendations presented in this letter. In order to minimize potential future pier settlement, all loose soil should be removed from the bottom of pier hole prior to placing concrete. If water collects in the pier shaft, it should be pumped out prior to the placement of concrete. The pier hole should not be allowed to desiccate before placing concrete. Depressions at the top of the pier resulting from drilling operations or from any other cause should be backfilled to prevent ponding. A concrete collar occurring at the top of the pier as a result of placing should be removed to prevent unnecessary uplift forces against the pier.

8.0 SLABS-ON-GRADE

8.1 EXTERIOR FLATWORK

Exterior flatwork includes items such as concrete sidewalks exposed to foot traffic only. Provide a minimum section of 4 inches of concrete over 4 inches of aggregate base. Compact the aggregate base to at least 90 percent relative compaction (ASTM D1557). Construct control and construction joints in accordance with current Portland Cement Association Guidelines. In locations where the concrete flatwork is placed on expansive soil, the subgrade should be saturated prior to placement.

9.0 RETAINING WALL AND SOUND WALL RECOMMENDATIONS

9.1 LATERAL SOIL PRESSURES

Proposed conventional retaining walls and sound walls should be designed to resist lateral earth pressures from adjoining natural materials and/or backfill and from any surcharge loads. Provided that adequate drainage is included as recommended below, walls not restrained at the top should be designed for active lateral loading conditions, while walls restrained at the top should be designed for at-rest lateral loading conditions. The recommended lateral equivalent fluid pressures for retaining and sound wall design are presented below.

TABLE 9.1-1: Retaining/Sound Wall Design Parameters (Drained)

BACKFILL SLOPE CONDITION	ACTIVE PRESSURE (PCF)	AT-REST PRESSURE (PCF)
Level	30	50
4:1	40	60
3:1	55	75

In accordance with California Building Code requirements, foundation walls and retaining walls supporting more than 6 feet of backfill height are to be designed for dynamic seismic lateral earth pressures corresponding to design earthquake ground motions. We recommend a dynamic seismic lateral earth pressure corresponding to an equivalent fluid pressure of 8 pcf for a yielding (unrestrained) wall design. When considering seismic earth pressures for retaining walls, the recommended seismic earth pressure increment should be added to the active earth pressures provided above.

Appropriate surcharge loads from buildings, hardscape, and vehicles should be incorporated when the surcharge loading is situated above a 1:1 (horizontal:vertical) line of projection extending up the rear base edge of the bottom of the footing. A uniform horizontal surcharge load of 50 percent of the vertical surcharge load should be assumed to act over the height of the wall.

If adequate drainage is not provided, we recommend that an additional equivalent fluid pressure of 40 pcf be added to the values recommended above for both restrained and unrestrained walls. Damp-proofing of the walls should be included in areas where wall moisture would be problematic.

Passive pressures acting on foundations may be assumed as 300 pounds per cubic foot (pcf) provided that the area in front of the wall is level for a distance of at least 10 feet or three times the depth of foundation, whichever is greater. The friction factor for sliding resistance may be assumed as 0.30. The upper 1 foot of soil should be excluded from passive pressure computations unless it is confined by pavement or a concrete slab. Passive pressures should be reduced by ½ if used in combination with sliding friction.

9.2 RETAINING WALL DRAINAGE

Construct either graded rock drains or geosynthetic drainage composites behind the retaining walls to reduce hydrostatic lateral forces. For rock drain construction, we recommend two types of rock drain alternatives.

1. A minimum 12-inch-thick layer of Class 2 Permeable Filter Material (Caltrans Specification 68-1.025) placed directly behind the wall, or

2. A minimum 12-inch-thick layer of washed, crushed rock with 100 percent passing the ¾-inch sieve and less than 5 percent passing the No. 4 sieve. Envelop rock in a minimum 6-ounce, nonwoven geotextile filter fabric.

For both types of rock drains:

1. Place the rock drain directly behind the walls of the structure.
2. Extend rock drains from the wall base to within 12 inches of the top of the wall.
3. Place a minimum of 4-inch-diameter perforated pipe at the base of the wall, inside the rock drain and fabric, with perforations placed down.
4. Place pipe at a gradient at least 1 percent to direct water away from the wall by gravity to a drainage facility.

ENGEO should review and approve geosynthetic composite drainage systems prior to use.

9.3 BACKFILL

Backfill behind retaining walls should be placed and compacted in accordance with earthwork recommendations contained in this report. Use light compaction equipment within 5 feet of the wall face. If heavy compaction equipment is used, the walls should be temporarily braced to avoid excessive wall movement.

9.4 FOUNDATIONS

Retaining and sound walls may be supported on continuous footings designed for an allowable bearing pressure of 2,500 psf embedded to a minimum depth of 24 inches.

10.0 PAVEMENT DESIGN

While no traffic indices (TIs) have been provided, we assumed a range of TIs for development of the pavement sections below for the proposed parking area. The civil engineer should determine the appropriate traffic indices based on the estimated traffic loads and frequencies.

10.1 FLEXIBLE PAVEMENTS

Using estimated traffic indices for various pavement loading requirements, we developed the following recommended pavement sections using Topic 633 of the Caltrans Highway Design Manual (including the asphalt factor of safety), presented in the table below. We assumed a design R-Value of 5 based on the near-surface soil encountered at the site.

TABLE 10.1-1: Recommended Hot Mix Asphalt Pavement Sections

TRAFFIC INDEX	PAVEMENT SECTION	
	HOT MIX ASPHALT (INCHES)	CLASS 2 AGGREGATE BASE (INCHES)
4	2½	8
5	3	10
6	3½	13
7	4	16

If desired, when site grading is completed, ENGEO can collect near-surface bulk soil samples and conduct R-Value testing to see if the above pavement sections can be reduced.

10.1 SUBGRADE AND AGGREGATE BASE COMPACTION

Compact finish subgrade and aggregate base in accordance with Section 5.4. Aggregate Base should meet the requirements for ¾-inch maximum Class 2 AB in accordance with Section 26_1.02B of the latest Caltrans Standard Specifications.

11.0 LIMITATIONS AND UNIFORMITY OF CONDITIONS

This report presents geotechnical recommendations for design of the improvements discussed in Section 1.2 for the subject project. If changes occur in the nature or design of the project, we should be allowed to review this report and provide additional recommendations, if any. It is the responsibility of the owner to transmit the information and recommendations of this report to the appropriate organizations or people involved in design of the project, including but not limited to developers, owners, buyers, architects, engineers, and designers. The conclusions and recommendations contained in this report are solely professional opinions and are valid for a period of no more than 2 years from the date of report issuance.

We strived to perform our professional services in accordance with generally accepted principles and practices currently employed in the area; there is no warranty, express or implied. There are risks of earth movement and property damages inherent in building on or with earth materials. We are unable to eliminate all risks; therefore, we are unable to guarantee or warrant the results of our services.

This report is based upon field and other conditions discovered at the time of report preparation. We developed this report with limited subsurface exploration data. We assumed that our subsurface exploration data is representative of the actual subsurface conditions across the site. Considering possible underground variability of soil, rock, stockpiled material, and groundwater, additional costs may be required to complete the project. We recommend that the owner establish a contingency fund to cover such costs. If unexpected conditions are encountered, notify ENGEO immediately to review these conditions and provide additional and/or modified recommendations, as necessary.

Our geotechnical exploration did not include work to determine the existence of possible hazardous materials. If any hazardous materials are encountered during construction, then notify the proper regulatory officials immediately.

This document must not be subject to unauthorized reuse, that is, reusing without written authorization of ENGEO. Such authorization is essential because it requires ENGEO to evaluate the document's applicability given new circumstances, not the least of which is passage of time. Actual field or other conditions will necessitate clarifications, adjustments, modifications, or other changes to ENGEO's documents. Therefore, ENGEO must be engaged to prepare the necessary clarifications, adjustments, modifications, or other changes before construction activities commence or further activity proceeds. If ENGEO's scope of services does not include on-site construction observation, or if other persons or entities are retained to provide such services, ENGEO cannot be held responsible for any or all claims arising from or resulting from the performance of such services by other persons or entities, and from any or all claims arising from

or resulting from clarifications, adjustments, modifications, discrepancies, or other changes necessary to reflect changed field or other conditions.

We determined the lines designating the interface between layers on the exploration logs using visual observations. The transition between the materials may be abrupt or gradual. The exploration logs contain information concerning samples recovered, indications of the presence of various materials such as clay, sand, silt, rock, existing fill, etc., and observations of groundwater encountered. The field logs also contain our interpretation of the subsurface conditions between sample locations. Therefore, the logs contain both factual and interpretative information. Our recommendations are based on the contents of the final logs, which represent our interpretation of the field logs.

SELECTED REFERENCES

1. American Society of Civil Engineers (ASCE). 2016. Minimum Design Loads for Buildings and Other Structures, ASCE Standard, ASCE/SEI 7-16.

2. California Building Standards Commission. 2019. California Building Code 2019, Volumes 1 and 2. Sacramento, California.

3. California Department of Transportation. 2012. Highway Design Manual.

4. California Geological Survey, by Bryant, W.A., and Hart, E.W., *Fault-Rupture Hazard Zones in California*; Special Publication 42, Interim Revision 2007.

5. Eaton J. 1986. *Tectonic Environment of the 1892 Vacaville/Winters Earthquakes and the Potential of Large Earthquakes along the Western Edge of the Sacramento Valley*; U.S. Geological Survey Open-File Report 86-370.

6. Moores, E. M., Unruh, J. R., and Verosub, K. L. 1991. *Quaternary Blind Thrusting and Potential Seismic Hazards in the S.W. Sacramento Valley, California*; GSA Conference, May 29, 1991.

7. Petersen, M. D., et al. 2008. *Documentation for the 2008 Update of the United States National Seismic Hazard Maps*; U.S. Geological Survey Open-File Report 2008–1128, 61 p.

8. SEAOC. 1996. *Recommended Lateral Force Requirements and Tentative Commentary*.

9. United States Geologic Survey (USGS). 2008. National Seismic Hazard Maps Fault Parameters.

10. Wagner D.L., Bortugno E.J., and. McJunkin R.D. 1991. *Geologic Map of the San Francisco-San Jose Quadrangle, California 1:250,000*.

11. Wong, I. G. and Biggar, N. E. 1989. *Seismicity of eastern Contra Costa County, San Francisco Bay Region, California*; Bulletin of the Seismological Society of America, v. 79.

FIGURES

FIGURE 1: Vicinity Map
FIGURE 2: Site Plan
FIGURE 3: Regional Geologic Map
FIGURE 4: Regional Faulting and Seismicity

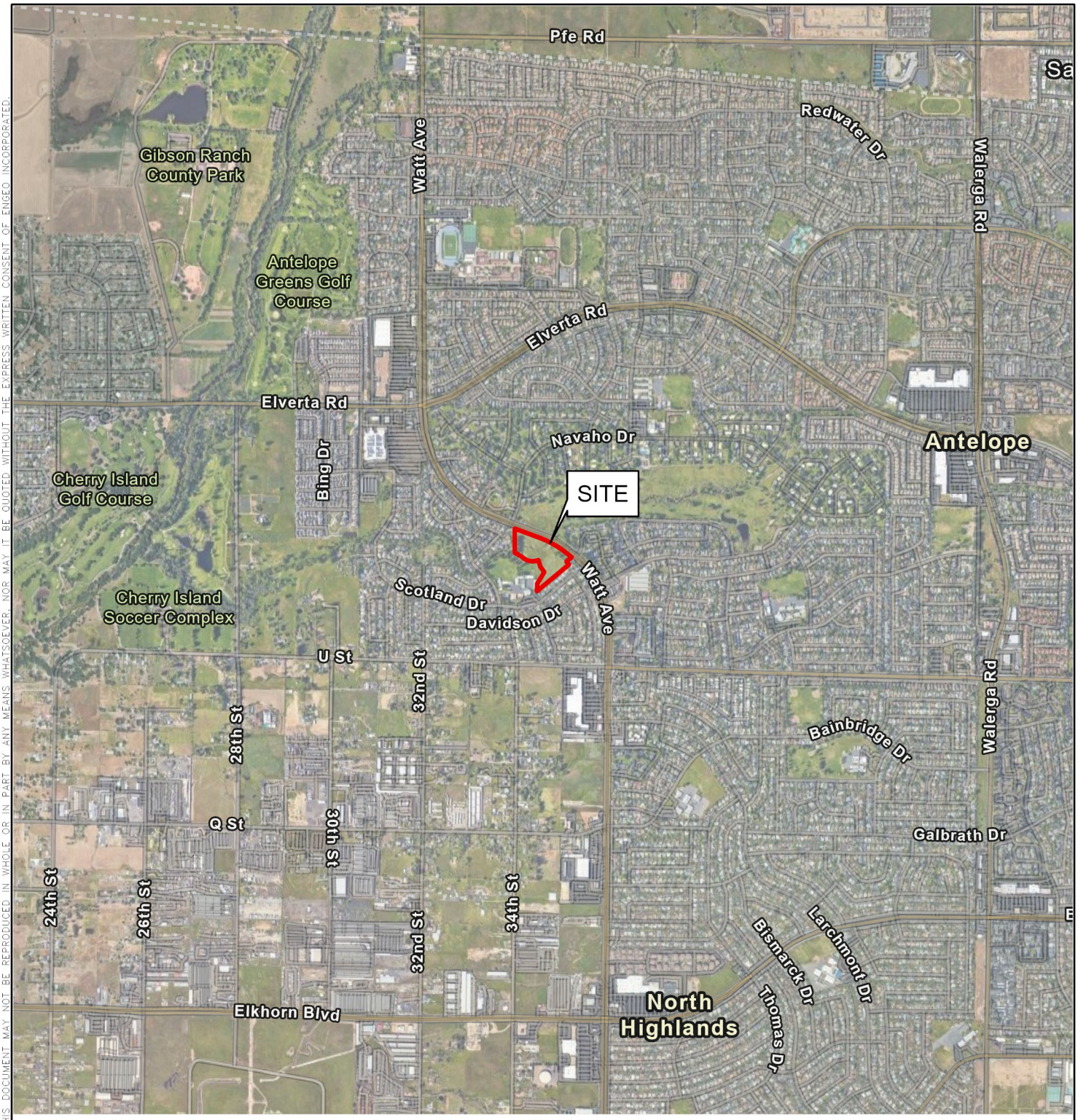

N

0 1,000 2,000

FEET

BASEMAP SOURCE: GOOGLE EARTH MAPPING SERVICE 02/18/2022

COPYRIGHT © 2022 BY ENGEO INCORPORATED. THIS DOCUMENT MAY NOT BE REPRODUCED IN WHOLE OR IN PART BY ANY MEANS WHATSOEVER, NOR MAY IT BE QUOTED WITHOUT THE EXPRESS WRITTEN CONSENT OF ENGEO INCORPORATED.

ENGEO
Expect Excellence

VICINITY MAP
SIERRA CREEK PARK
ANTELOPE, CALIFORNIA

PROJECT NO. :	21219.000.001
SCALE:	AS SHOWN
DRAWN BY: NLK	CHECKED BY: SDH

FIGURE NO. 1

PATH: G:\DRAFTING\PROJECTS_20000 TO 21999\21219\21219.000.001\GEX\GIS\21219_SIERRA_CREEK_PARK.APRX
LAYOUT: VICINITY USER: NLAMOTTEKERR

ORIGINAL FIGURE PRINTED IN COLOR

EXPLANATION

ALL LOCATIONS ARE APPROXIMATE

- PROJECT SITE
- BORING (ENGEO, 2022)
- PERCOLATION TEST (ENGEO, 2022)

N

0 100 200

FEET

BASEMAP SOURCE: GOOGLE EARTH MAPPING SERVICE 2021 AND AECOM CONCEPTUAL PARK PLAN 2020

ENGEO Expect Excellence

SITE PLAN

SIERRA CREEK PARK

ANTELOPE, CALIFORNIA

PROJECT NO. : 21219.000.001		FIGURE NO. 2
SCALE: AS SHOWN		
DRAWN BY: NLK	CHECKED BY: SDH	

PATH: G:\DRAFTING\PROJECTS_20000 TO 21999\21219\21219.000.001\GEX\GIS\21219_SIERRA_CREEK_PARK.APRX
LAYOUT: SITE PLAN USER: NLAMOTTEKERR

ORIGINAL FIGURE PRINTED IN COLOR

COPYRIGHT © 2022 BY ENGEO INCORPORATED. THIS DOCUMENT MAY NOT BE REPRODUCED IN WHOLE OR IN PART BY ANY MEANS WHATSOEVER, NOR MAY IT BE QUOTED WITHOUT THE EXPRESS WRITTEN CONSENT OF ENGEO INCORPORATED.

EXPLANATION

ALL LOCATIONS ARE APPROXIMATE

Qr	RIVERBANK FORMATION
Qtl	TURLOCK LAKE FORMATION

N

0 3,000 6,000

FEET

BASEMAP SOURCE: WAGNER 1981

ENGEO
Expect Excellence

REGIONAL GEOLOGIC MAP
SIERRA CREEK PARK
ANTELOPE, CALIFORNIA

PROJECT NO. : 21219.000.001		FIGURE NO. 3
SCALE: AS SHOWN		
DRAWN BY: NLK	CHECKED BY: SDH	

PATH: G:\DRAFTING\PROJECTS_20000 TO 21999\21219\21219.000.001\GEX\GIS\21219_SIERRA_CREEK_PARK.APRX
LAYOUT: GEOLOGIC USER: NLAMOTTEKERR

ORIGINAL FIGURE PRINTED IN COLOR

COPYRIGHT © 2022 BY ENGEO INCORPORATED. THIS DOCUMENT MAY NOT BE REPRODUCED IN WHOLE OR IN PART BY ANY MEANS WHATSOEVER, NOR MAY IT BE QUOTED WITHOUT THE EXPRESS WRITTEN CONSENT OF ENGEO INCORPORATED.

COPYRIGHT © 2022 BY ENGEO INCORPORATED. THIS DOCUMENT MAY NOT BE REPRODUCED IN WHOLE OR IN PART BY ANY MEANS WHATSOEVER, NOR MAY IT BE QUOTED WITHOUT THE EXPRESS WRITTEN CONSENT OF ENGEO INCORPORATED.

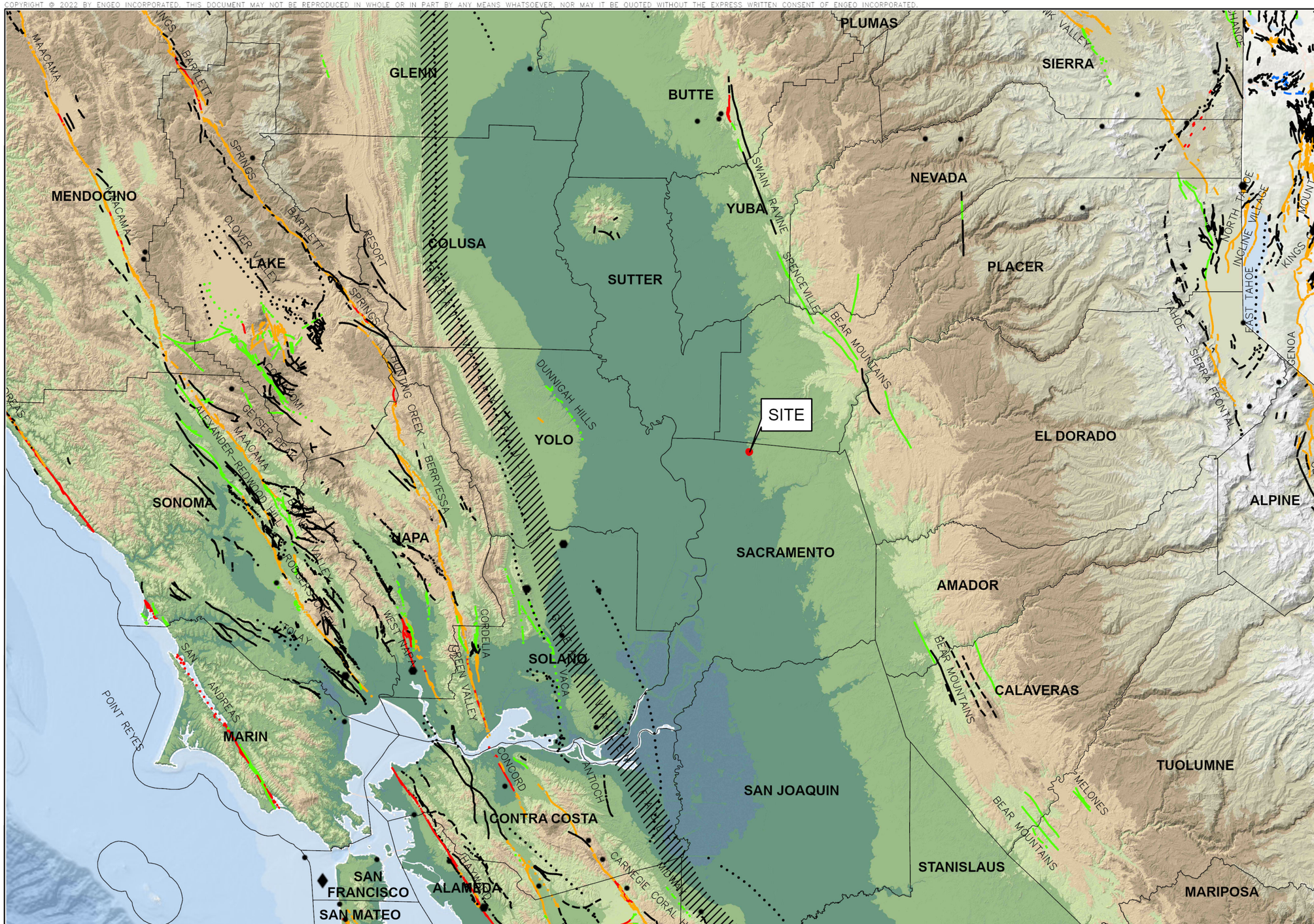

EXPLANATION

ALL LOCATIONS ARE APPROXIMATE

EARTHQUAKE

- ◆ MAGNITUDE 7+
- ⬢ MAGNITUDE 6-7
- • MAGNITUDE 5-6

QUATERNARY FAULTS 2020

BASED ON TIME OF MOST RECENT SURFACE DEFORMATION

- HISTORICAL (<150 YEARS), WELL CONSTRAINED LOCATION
- HISTORICAL (<150 YEARS), MODERATELY CONSTRAINED LOCATION
- HISTORICAL (<150 YEARS), INFERRED LOCATION
- LATEST QUATERNARY (<15,000 YEARS), WELL CONSTRAINED LOCATION
- LATEST QUATERNARY (<15,000 YEARS), MODERATELY CONSTRAINED LOCATION
- LATEST QUATERNARY (<15,000 YEARS), INFERRED LOCATION
- LATE QUATERNARY (<130,000 YEARS), WELL CONSTRAINED LOCATION
- LATE QUATERNARY (<130,000 YEARS), MODERATELY CONSTRAINED LOCATION
- LATE QUATERNARY (<130,000 YEARS), INFERRED LOCATION
- MIDDLE AND LATE QUATERNARY (<750,000 YEARS), WELL CONSTRAINED LOCATION
- MIDDLE AND LATE QUATERNARY (<750,000 YEARS), MODERATELY CONSTRAINED LOCATION
- UNDIFFERENTIATED QUATERNARY(<1.6 MILLION YEARS), WELL CONSTRAINED LOCATION
- UNDIFFERENTIATED QUATERNARY(<1.6 MILLION YEARS), MODERATELY CONSTRAINED LOCATION
- GREAT VALLEY FAULT ZONE

BASE MAP SOURCE
ESRI, GEBCO, DELORME, NATURALVUE
COLOR HILLSHADE IMAGE BASED ON THE NATIONAL ELEVATION DATA SET (NED) AT 30 METER RESOLUTION
U.S.G.S. QUATERNARY FAULT DATABASE, 2020
U.S.G.S. HISTORIC EARTHQUAKE DATABASE (1800-PRESENT)
U.S.G.S OPEN-FILE REPORT 96-705

ENGEO
Expect Excellence

REGIONAL FAULTING AND SEISMICITY
SIERRA CREEK PARK
ANTELOPE, CALIFORNIA

PROJECT NO. :	21219.000.001
SCALE:	AS SHOWN
DRAWN BY:	SPPE
CHECKED BY:	SDH

FIGURE NO. 4

PATH: G:\DRAFTING\PROJECTS_20000 TO 21999\21219\21219.000.001\GEX\GIS\21219_SIERRA_CREEK_PARK.APRX
LAYOUT: FAULT&SEISMICITY USER: NLAMOTTEKERR

ORIGINAL FIGURE PRINTED IN COLOR

APPENDIX A

BORING LOG KEY
BORING LOGS

KEY TO BORING LOGS

MAJOR TYPES			DESCRIPTION
COARSE-GRAINED SOILS MORE THAN HALF OF MAT'L LARGER THAN #200 SIEVE	GRAVELS MORE THAN HALF COARSE FRACTION IS LARGER THAN NO. 4 SIEVE SIZE	CLEAN GRAVELS WITH LESS THAN 5% FINES	GW - Well graded gravels or gravel-sand mixtures GP - Poorly graded gravels or gravel-sand mixtures
		GRAVELS WITH OVER 12 % FINES	GM - Silty gravels, gravel-sand and silt mixtures GC - Clayey gravels, gravel-sand and clay mixtures
	SANDS MORE THAN HALF COARSE FRACTION IS SMALLER THAN NO. 4 SIEVE SIZE	CLEAN SANDS WITH LESS THAN 5% FINES	SW - Well graded sands, or gravelly sand mixtures SP - Poorly graded sands or gravelly sand mixtures
		SANDS WITH OVER 12 % FINES	SM - Silty sand, sand-silt mixtures SC - Clayey sand, sand-clay mixtures
FINE-GRAINED SOILS MORE THAN HALF OF MAT'L SMALLER THAN #200 SIEVE	SILTS AND CLAYS LIQUID LIMIT 50 % OR LESS		ML - Inorganic silt with low to medium plasticity CL - Inorganic clay with low to medium plasticity OL - Low plasticity organic silts and clays
	SILTS AND CLAYS LIQUID LIMIT GREATER THAN 50 %		MH - Elastic silt with high plasticity CH - Fat clay with high plasticity OH - Highly plastic organic silts and clays
	HIGHLY ORGANIC SOILS		PT - Peat and other highly organic soils

For fine-grained soils with 15 to 29% retained on the #200 sieve, the words "with sand" or "with gravel" (whichever is predominant) are added to the group name.

For fine-grained soil with >30% retained on the #200 sieve, the words "sandy" or "gravelly" (whichever is predominant) are added to the group name.

GRAIN SIZES

U.S. STANDARD SERIES SIEVE SIZE				CLEAR SQUARE SIEVE OPENINGS			
200	40	10	4	3/4 "		3"	12"
SILTS AND CLAYS	SAND			GRAVEL		COBBLES	BOULDERS
	FINE	MEDIUM	COARSE	FINE	COARSE		

RELATIVE DENSITY

SANDS AND GRAVELS	BLOWS/FOOT (S.P.T.)
VERY LOOSE	0-4
LOOSE	4-10
MEDIUM DENSE	10-30
DENSE	30-50
VERY DENSE	OVER 50

CONSISTENCY

SILTS AND CLAYS	STRENGTH*
VERY SOFT	0-1/4
SOFT	1/4-1/2
MEDIUM STIFF	1/2-1
STIFF	1-2
VERY STIFF	2-4
HARD	OVER 4

SAMPLER SYMBOLS

- Modified California (3" O.D.) sampler
- California (2.5" O.D.) sampler
- S.P.T. - Split spoon sampler
- Shelby Tube
- Dames and Moore Piston
- Continuous Core
- Bag Samples
- Grab Samples
- NR No Recovery

MOISTURE CONDITION

DRY	Dusty, dry to touch
MOIST	Damp but no visible water
WET	Visible freewater

LINE TYPES

———— Solid - Layer Break

– – – – – – Dashed - Gradational or approximate layer break

GROUNDWATER SYMBOLS

- Groundwater level during drilling
- Stabilized groundwater level

(S.P.T.) Number of blows of 140 lb. hammer falling 30" to drive a 2-inch O.D. (1-3/8 inch I.D.) sampler

* Unconfined compressive strength in tons/sq. ft., asterisk on log means determined by pocket penetrometer

ENGEO
Expect Excellence

LOG OF BORING 1-B01

ENGEO Expect Excellence

LATITUDE: 38.708706 LONGITUDE: -121.386492

Geotechnical Exploration
Sierra Creek Park
Antelope, CA
21219.000.001

DATE DRILLED: 11/14/2022
HOLE DEPTH: Approx. 26 ft.
HOLE DIAMETER: 4½ in.
SURF ELEV (WGS 84): Approx. 77 ft.

LOGGED / REVIEWED BY: A. Hauger / ZC
DRILLING CONTRACTOR: West Coast Exploration
DRILLING METHOD: Solid Flight Auger
HAMMER TYPE: 140 lb. Rope and Cathead

Depth in Feet	Elevation in Feet	Sample Type	DESCRIPTION	Log Symbol	Water Level	Blow Count/Foot	Atterberg Limits: Liquid Limit	Atterberg Limits: Plastic Limit	Atterberg Limits: Plasticity Index	Fines Content (% passing #200 sieve)	Moisture Content (% dry weight)	Dry Unit Weight (pcf)	Unconfined Strength (tsf) *field approx
			SILTY SAND (SM), dark yellowish brown, medium dense, moist, fine- to medium-grained sand, approximately 30% fines, contains rootlets, iron oxidation										
	75					35							
			Grades to approximately 25% fines, weakly cemented			45							
			SANDY SILT (ML), dark yellowish brown, hard, moist, fine- to medium-grained sand, weakly cemented										
5						50/5"				67			
	70												
			SANDY SILT (ML), olive brown, hard, moist, approximately 30% fine- to medium-grained sand, contains iron oxidation, mica										
10						50/6"							
	65												
			SILT (ML), olive brown, very stiff, moist, fine-grained sand, contains iron oxidation, mica										
15						56				95			4.0*
	60												
			POORLY GRADED SAND WITH SILT (SP-SM), dark yellowish brown, very dense, moist, fine- to medium-grained sand, approximately 10% fines, contains mica										
20						80							
	55												

LOG OF BORING 1-B01

ENGEO
Expect Excellence

LATITUDE: 38.708706 LONGITUDE: -121.386492

Geotechnical Exploration
Sierra Creek Park
Antelope, CA
21219.000.001

DATE DRILLED: 11/14/2022
HOLE DEPTH: Approx. 26 ft.
HOLE DIAMETER: 4½ in.
SURF ELEV (WGS 84): Approx. 77 ft.

LOGGED / REVIEWED BY: A. Hauger / ZC
DRILLING CONTRACTOR: West Coast Exploration
DRILLING METHOD: Solid Flight Auger
HAMMER TYPE: 140 lb. Rope and Cathead

Depth in Feet	Elevation in Feet	Sample Type	DESCRIPTION	Log Symbol	Water Level	Blow Count/Foot	Atterberg Limits: Liquid Limit	Atterberg Limits: Plastic Limit	Atterberg Limits: Plasticity Index	Fines Content (% passing #200 sieve)	Moisture Content (% dry weight)	Dry Unit Weight (pcf)	Unconfined Strength (tsf) *field approx
			SILTY SAND (SM), olive brown, very dense, moist, fine- to medium-grained sand, approximately 30% fines, contains fine gravel, iron oxidation, mica										
25						50/5"							
			Boring terminated at a depth of approximately 26 feet. Groundwater not encountered during drilling.										

LOG OF BORING 1-B02

ENGEO Expect Excellence

LATITUDE: 38.708858 LONGITUDE: -121.386572

Geotechnical Exploration
Sierra Creek Park
Antelope, CA
21219.000.001

DATE DRILLED: 11/14/2022
HOLE DEPTH: Approx. 20¾ ft.
HOLE DIAMETER: 4½ in.
SURF ELEV (WGS 84): Approx. 81 ft.

LOGGED / REVIEWED BY: A. Hauger / ZC
DRILLING CONTRACTOR: West Coast Exploration
DRILLING METHOD: Solid Flight Auger
HAMMER TYPE: 140 lb. Rope and Cathead

Depth in Feet	Elevation in Feet	Sample Type	DESCRIPTION	Log Symbol	Water Level	Blow Count/Foot	Atterberg Limits: Liquid Limit	Atterberg Limits: Plastic Limit	Atterberg Limits: Plasticity Index	Fines Content (% passing #200 sieve)	Moisture Content (% dry weight)	Dry Unit Weight (pcf)	Unconfined Strength (tsf) *field approx
	80		SILTY SAND (SM), yellowish brown, loose, moist, fine- to medium-grained sand, approximately 30% fines, contains iron and manganese oxidation, rootlets			19					6	99	
			POORLY GRADED SAND WITH SILT (SP-SM), yellowish brown, loose, moist, fine- to coarse-grained sand, approximately 10% fines, contains iron and manganese oxidation, rootlets			11							
5	75		Grades to olive, wet			8					12		
			CLAYEY SAND (SC), yellowish brown, medium dense, moist, fine- to coarse-grained sand, low plasticity fines, contains iron oxidation, fine gravel										
10	70					25				38	21		
			SILT (ML), olive, hard, moist, approximately 15% fine-grained sand, contains mica, weakly cemented										
15	65					50/5"					34		4.5+*
			Grades to moderately cemented										
20			SILTY SAND (SM), olive, very dense, moist, fine- to medium-grained sand, approximately 30% fines, contains mica			50/3"					34	84	

Boring terminated at a depth of approximately 20¾ feet. Groundwater not encountered during drilling. Perched water observed at a depth of approximately 6 feet.

LOG OF BORING 1-B03

ENGEO Expect Excellence

LATITUDE: 38.708553 LONGITUDE: -121.387325

Geotechnical Exploration
Sierra Creek Park
Antelope, CA
21219.000.001

DATE DRILLED: 11/14/2022
HOLE DEPTH: Approx. 25½ ft.
HOLE DIAMETER: 4½ in.
SURF ELEV (WGS 84): Approx. 81 ft.

LOGGED / REVIEWED BY: A. Hauger / ZC
DRILLING CONTRACTOR: West Coast Exploration
DRILLING METHOD: Solid Flight Auger
HAMMER TYPE: 140 lb. Rope and Cathead

Depth in Feet	Elevation in Feet	Sample Type	DESCRIPTION	Log Symbol	Water Level	Blow Count/Foot	Atterberg Limits: Liquid Limit	Atterberg Limits: Plastic Limit	Atterberg Limits: Plasticity Index	Fines Content (% passing #200 sieve)	Moisture Content (% dry weight)	Dry Unit Weight (pcf)	Unconfined Strength (tsf) *field approx
	80		SILTY SAND (SM), dark yellowish brown, medium dense, dry to moist, fine- to medium-grained sand, low plasticty fines, contains rootlets, weakly cemented			26	21	18	3	36			
			SILTY SAND (SM), dark yellowish brown, medium dense, moist, fine- to medium-grained sand, approximately 30% fines, contains rootlets, weakly cemented			33							
5	75		Grades to olive, dense, dry to moist, approximately 15% fine- to medium-grained sand, moderately cemented, no rootlets			65							
			POORLY GRADED SAND WITH CLAY (SP-SC), reddish brown, very dense, moist, fine- to medium-grained sand, approximately 10% fines										
10	70					50/5"							
			SILT WITH SAND (ML), light yellowish brown, hard, moist, approximately 20% fine- to medium-grained sand, weakly cemented										
15	65					50/5"							4.5+*
20	60		Grades to olive brown, approximately 25% fine- to medium-grained sand, contains manganese oxidation			50/4"							

LOG OF BORING 1-B03

ENGEO
Expect Excellence

LATITUDE: 38.708553 LONGITUDE: -121.387325

Geotechnical Exploration
Sierra Creek Park
Antelope, CA
21219.000.001

DATE DRILLED: 11/14/2022
HOLE DEPTH: Approx. 25½ ft.
HOLE DIAMETER: 4½ in.
SURF ELEV (WGS 84): Approx. 81 ft.

LOGGED / REVIEWED BY: A. Hauger / ZC
DRILLING CONTRACTOR: West Coast Exploration
DRILLING METHOD: Solid Flight Auger
HAMMER TYPE: 140 lb. Rope and Cathead

Depth in Feet	Elevation in Feet	Sample Type	DESCRIPTION	Log Symbol	Water Level	Blow Count/Foot	Atterberg Limits: Liquid Limit	Atterberg Limits: Plastic Limit	Atterberg Limits: Plasticity Index	Fines Content (% passing #200 sieve)	Moisture Content (% dry weight)	Dry Unit Weight (pcf)	Unconfined Strength (tsf) *field approx
			SILT WITH SAND (ML), light yellowish brown, hard, moist, approximately 20% fine- to medium-grained sand, weakly cemented										
25			Grades to dark yellowish brown, approximately 30% fine- to coarse-grained sand, contains mica			50/4"							
			Boring terminated at a depth of approximately 25½ feet. Groundwater not encountered during drilling.										

LOG OF BORING 1-B04

ENGEO Expect Excellence

LATITUDE: 38.708586 LONGITUDE: -121.387053

Geotechnical Exploration
Sierra Creek Park
Antelope, CA
21219.000.001

DATE DRILLED: 11/14/2022
HOLE DEPTH: Approx. 21 ft.
HOLE DIAMETER: 4½ in.
SURF ELEV (WGS 84): Approx. 79 ft.

LOGGED / REVIEWED BY: A. Hauger / ZC
DRILLING CONTRACTOR: West Coast Exploration
DRILLING METHOD: Solid Flight Auger
HAMMER TYPE: 140 lb. Rope and Cathead

Depth in Feet	Elevation in Feet	Sample Type	DESCRIPTION	Log Symbol	Water Level	Blow Count/Foot	Atterberg Limits: Liquid Limit	Atterberg Limits: Plastic Limit	Atterberg Limits: Plasticity Index	Fines Content (% passing #200 sieve)	Moisture Content (% dry weight)	Dry Unit Weight (pcf)	Unconfined Strength (tsf) *field approx
			SILTY SAND (SM), dark yellowish brown, medium dense, moist, fine- to medium-grained sand, contains rootlets			32							
						21				34			
	75												
5			CLAYEY SAND (SC), dark yellowish brown, medium dense, moist, fine- to medium-grained sand, approximately 20% low plasticity fines, contains fine gravel, manganese oxidation			36							
			SILTY SAND (SM), dark yellowish brown, dense, moist, fine- to coarse-grained sand, approximately 15% fines, approximately 10% fine to coarse rounded gravel										
	70												
10						52							
	65		SILTY SAND (SM), olive brown, dense, moist, fine- to medium-grained sand, contains mica										
15						48				33			
			SILT (ML), olive brown, hard, moist, approximately 10% fine-grained sand, contains mica, weakly cemented										
	60												
20						50/5"							
			Boring terminated at depth of approximately 21 feet. Groundwater not encountered during drilling.										

LOG OF BORING 1-B05

ENGEO Expect Excellence

LATITUDE: 38.708375 LONGITUDE: -121.385844

Geotechnical Exploration
Sierra Creek Park
Antelope, CA
21219.000.001

DATE DRILLED: 11/14/2022
HOLE DEPTH: Approx. 16½ ft.
HOLE DIAMETER: 4½ in.
SURF ELEV (WGS 84): Approx. 82 ft.

LOGGED / REVIEWED BY: A. Hauger / ZC
DRILLING CONTRACTOR: West Coast Exploration
DRILLING METHOD: Solid Flight Auger
HAMMER TYPE: 140 lb. Rope and Cathead

Depth in Feet	Elevation in Feet	Sample Type	DESCRIPTION	Log Symbol	Water Level	Blow Count/Foot	Atterberg Limits: Liquid Limit	Atterberg Limits: Plastic Limit	Atterberg Limits: Plasticity Index	Fines Content (% passing #200 sieve)	Moisture Content (% dry weight)	Dry Unit Weight (pcf)	Unconfined Strength (tsf) *field approx
	80		SILTY SAND (SM), dark brown, medium dense, moist, fine- to medium-grained sand, approximately 40% fines, contains iron oxidation			39					7	106	
			Grades to olive brown, approximately 30% fines, weakly cemented			48							
5	75		CLAYEY SAND (SC), dark brown, dense, moist, fine- to coarse-grained sand, approximately 30% low plasticity fines, contains fine gravel, iron and manganese oxidation			52					11		
10	70		SILTY SAND (SM), dark yellowish brown, dense, moist, fine- to medium-grained sand, approximately 25% fines, contains iron and manganese oxidation			37					15		
15			SILT (ML), olive, very stiff, moist, approximately 5% fine-grained sand, contains iron oxidation			57					40		4.0*
			Boring terminated at a depth of approximately 16½ feet. Groundwater not encountered during drilling.										

LOG OF BORING 1-B06

ENGEO
Expect Excellence

LATITUDE: 38.708231 LONGITUDE: -121.385353

Geotechnical Exploration
Sierra Creek Park
Antelope, CA
21219.000.001

DATE DRILLED: 11/14/2022
HOLE DEPTH: Approx. 10½ ft.
HOLE DIAMETER: 4½ in.
SURF ELEV (WGS 84): Approx. 90 ft.

LOGGED / REVIEWED BY: A. Hauger / ZC
DRILLING CONTRACTOR: West Coast Exploration
DRILLING METHOD: Solid Flight Auger
HAMMER TYPE: 140 lb. Rope and Cathead

Depth in Feet	Elevation in Feet	Sample Type	DESCRIPTION	Log Symbol	Water Level	Blow Count/Foot	Atterberg Limits: Liquid Limit	Atterberg Limits: Plastic Limit	Atterberg Limits: Plasticity Index	Fines Content (% passing #200 sieve)	Moisture Content (% dry weight)	Dry Unit Weight (pcf)	Unconfined Strength (tsf) *field approx
			LEAN CLAY WITH SAND (CL), dark brown, hard, moist, medium plasticity, fine- to medium-grained sand, moderately cemented			42	46	17	29	80	12	121	14
			Grades to strongly cemented			50/6"							4.5+*
5	85					50/6"							4.5+*
			SILT (ML), olive, hard, moist, approximately 10% fine-grained sand, contains iron oxidation										
10	80					50/6"							4.5+*
			Boring terminated at a depth of approximately 10½ feet. Groundwater not encountered during drilling.										

LOG OF BORING 1-P01

ENGEO Expect Excellence

LATITUDE: 38.708061 LONGITUDE: -121.385942

Geotechnical Exploration
Sierra Creek Park
Antelope, CA
21219.000.001

DATE DRILLED: 11/14/2022
HOLE DEPTH: Approx. 10 ft.
HOLE DIAMETER: 4½ in.
SURF ELEV (WGS 84): Approx. 87 ft.

LOGGED / REVIEWED BY: A. Hauger / ZC
DRILLING CONTRACTOR: West Coast Exploration
DRILLING METHOD: Solid Flight Auger
HAMMER TYPE: 140 lb. Rope and Cathead

Depth in Feet	Elevation in Feet	Sample Type	DESCRIPTION	Log Symbol	Water Level	Blow Count/Foot	Atterberg Limits: Liquid Limit	Atterberg Limits: Plastic Limit	Atterberg Limits: Plasticity Index	Fines Content (% passing #200 sieve)	Moisture Content (% dry weight)	Dry Unit Weight (pcf)	Unconfined Strength (tsf) *field approx
	85		SILTY SAND (SM), reddish brown, moist, approximately 30% fines										
5			CLAYEY SAND (SC), yellowish brown, moist, approximately 40% low plasticity fines										
	80												
10			Boring terminated at a depth of approximately 10 feet. Groundwater not encountered during drilling.										

LOG OF BORING 1-P02

LATITUDE: 38.709133 LONGITUDE: -121.387011

Geotechnical Exploration
Sierra Creek Park
Antelope, CA
21219.000.001

DATE DRILLED: 11/14/2022
HOLE DEPTH: Approx. 5 ft.
HOLE DIAMETER: 4½ in.
SURF ELEV (WGS 84): Approx. 82 ft.

LOGGED / REVIEWED BY: A. Hauger / ZC
DRILLING CONTRACTOR: West Coast Exploration
DRILLING METHOD: Solid Flight Auger
HAMMER TYPE: 140 lb. Rope and Cathead

Depth in Feet	Elevation in Feet	Sample Type	DESCRIPTION	Log Symbol	Water Level	Blow Count/Foot	Atterberg Limits: Liquid Limit	Atterberg Limits: Plastic Limit	Atterberg Limits: Plasticity Index	Fines Content (% passing #200 sieve)	Moisture Content (% dry weight)	Dry Unit Weight (pcf)	Unconfined Strength (tsf) *field approx
	80		SANDY SILT (ML), reddish brown, moist, approximately 30% fine- to medium-grained sand										
5			Boring terminated at a depth of approximately 5 feet. Groundwater not encountered during drilling.										

LOG - GEOTECHNICAL W/ELEV. 21219 BORING LOGS.GPJ ENGEO INC.GDT 12/9/22

APPENDIX B

LABORATORY TEST DATA

PARTICLE SIZE DISTRIBUTION REPORT

ASTM D1140, Method B

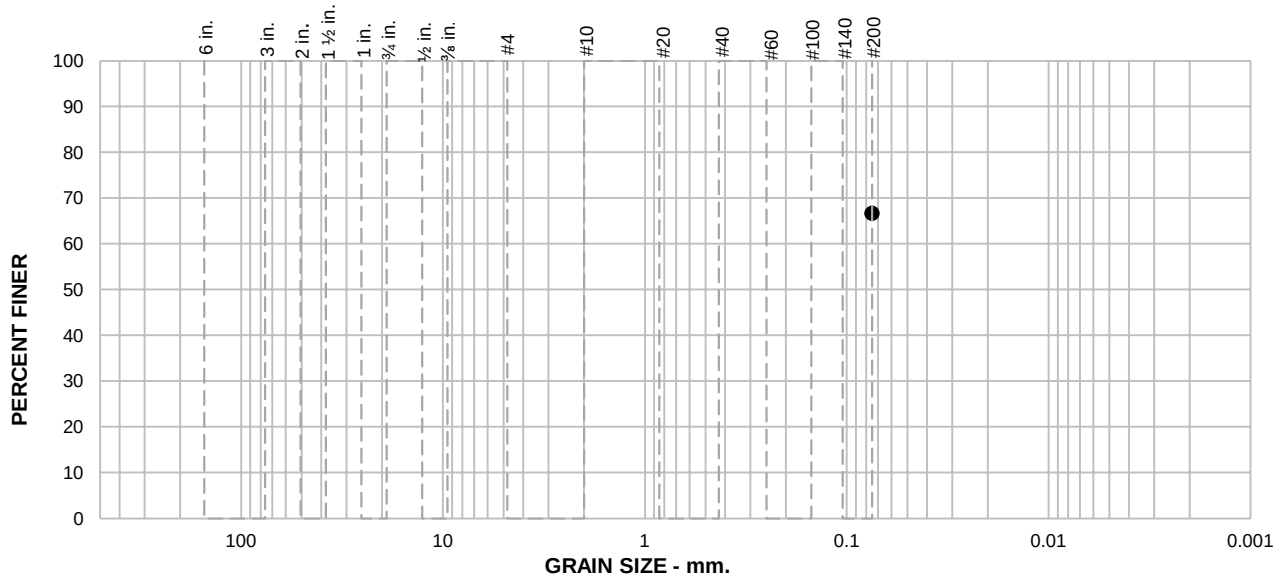

SAMPLE ID: 1-B01@5

DEPTH (ft): 5

% +75mm	% GRAVEL		% SAND			% FINES	
	COARSE	FINE	COARSE	MEDIUM	FINE	SILT	CLAY
						66.7	

SIEVE SIZE	PERCENT FINER	SPEC.* PERCENT	PASS? (X=NO)
#200	66.7		

SOIL DESCRIPTION

See exploration logs

ATTERBERG LIMITS

PL = LL = PI =

COEFFICIENTS

D_{90} = D_{85} = D_{60} =
D_{50} = D_{30} = D_{15} =
D_{10} = C_u = C_c =

CLASSIFICATION

USCS =

REMARKS

Soak time = 180 min
Dry sample weight = 194.8 g
Largest particle size < No. 4 Sieve

* (no specification provided)

ENGEO — Expect Excellence

CLIENT: O'Dell Engineering

PROJECT NAME: Sierra Creek Park

PROJECT NO: 21219.000.001 PH001

PROJECT LOCATION: Antelope, CA

REPORT DATE: 11/29/2022

TESTED BY: R. Montalvo

REVIEWED BY: M. Gilbert

PARTICLE SIZE DISTRIBUTION REPORT

ASTM D1140, Method B

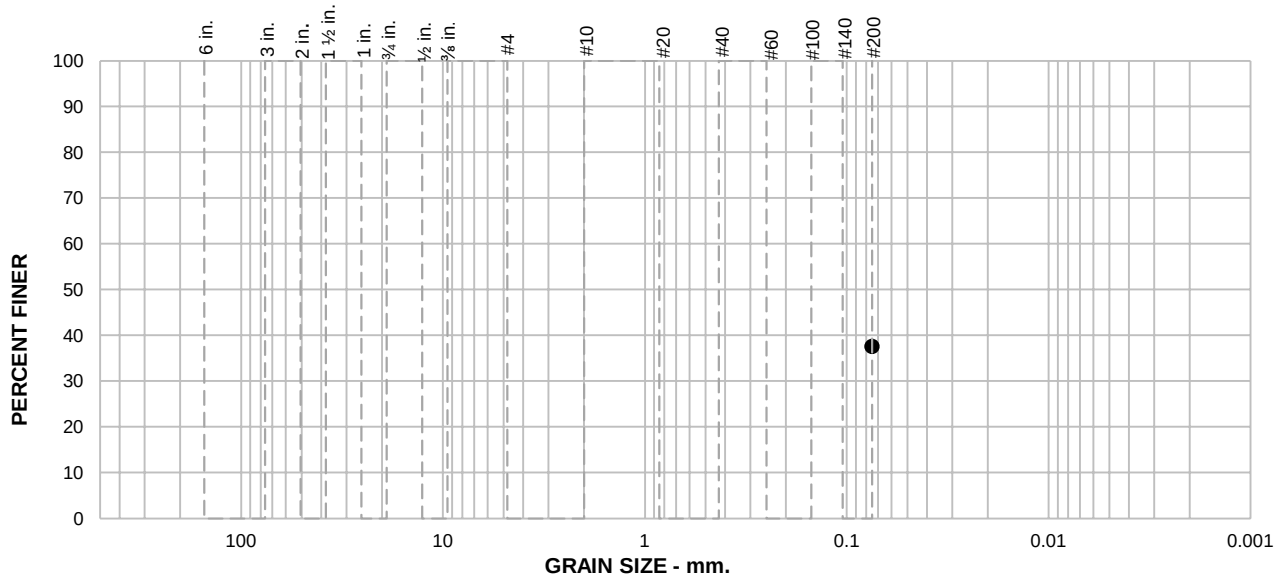

SAMPLE ID: 1-B02@10

DEPTH (ft): 10

% +75mm	% GRAVEL		% SAND			% FINES	
	COARSE	FINE	COARSE	MEDIUM	FINE	SILT	CLAY
						37.6	

SIEVE SIZE	PERCENT FINER	SPEC.* PERCENT	PASS? (X=NO)
#200	37.6		

SOIL DESCRIPTION

See exploration logs

ATTERBERG LIMITS

PL = LL = PI =

COEFFICIENTS

D_{90} = D_{85} = D_{60} =
D_{50} = D_{30} = D_{15} =
D_{10} = C_u = C_c =

CLASSIFICATION

USCS =

REMARKS

Soak time = 180 min
Dry sample weight = 238.9 g
Largest particle size < No. 4 Sieve

* (no specification provided)

ENGEO
Expect Excellence

CLIENT: O'Dell Engineering
PROJECT NAME: Sierra Creek Park
PROJECT NO: 21219.000.001 PH001
PROJECT LOCATION: Antelope, CA
REPORT DATE: 11/29/2022
TESTED BY: R. Montalvo
REVIEWED BY: M. Gilbert

PARTICLE SIZE DISTRIBUTION REPORT

ASTM D1140, Method B

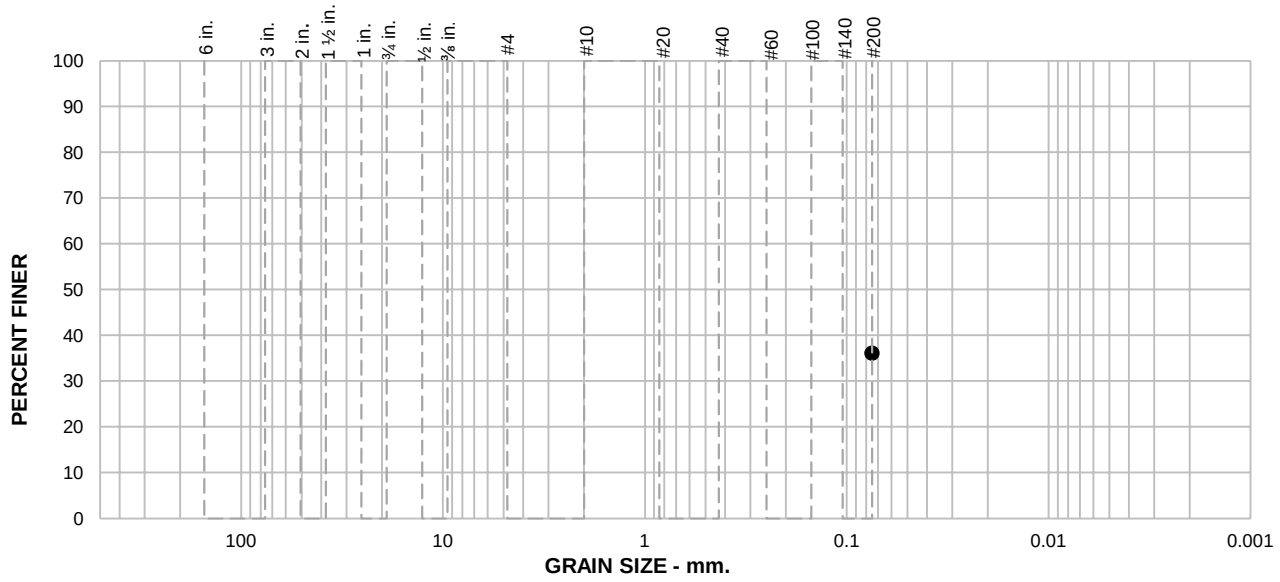

SAMPLE ID: 1-B03@1.5

DEPTH (ft): 1.5

% +75mm	% GRAVEL		% SAND			% FINES	
	COARSE	FINE	COARSE	MEDIUM	FINE	SILT	CLAY
						36.1	

SIEVE SIZE	PERCENT FINER	SPEC.* PERCENT	PASS? (X=NO)
#200	36.1		

SOIL DESCRIPTION

See exploration logs

ATTERBERG LIMITS

PL = 18 LL = 21 PI = 3

COEFFICIENTS

D_{90} = D_{85} = D_{60} =
D_{50} = D_{30} = D_{15} =
D_{10} = C_u = C_c =

CLASSIFICATION

USCS =

REMARKS

PI: ASTM D4318, Wet Method

Soak time = 180 min
Dry sample weight = 205.8 g
Largest particle size < No. 4 Sieve

* (no specification provided)

ENGEO
Expect Excellence

CLIENT: O'Dell Engineering
PROJECT NAME: Sierra Creek Park
PROJECT NO: 21219.000.001 PH001
PROJECT LOCATION: Antelope, CA
REPORT DATE: 11/29/2022
TESTED BY: R. Montalvo
REVIEWED BY: M. Gilbert

PARTICLE SIZE DISTRIBUTION REPORT

ASTM D1140, Method B

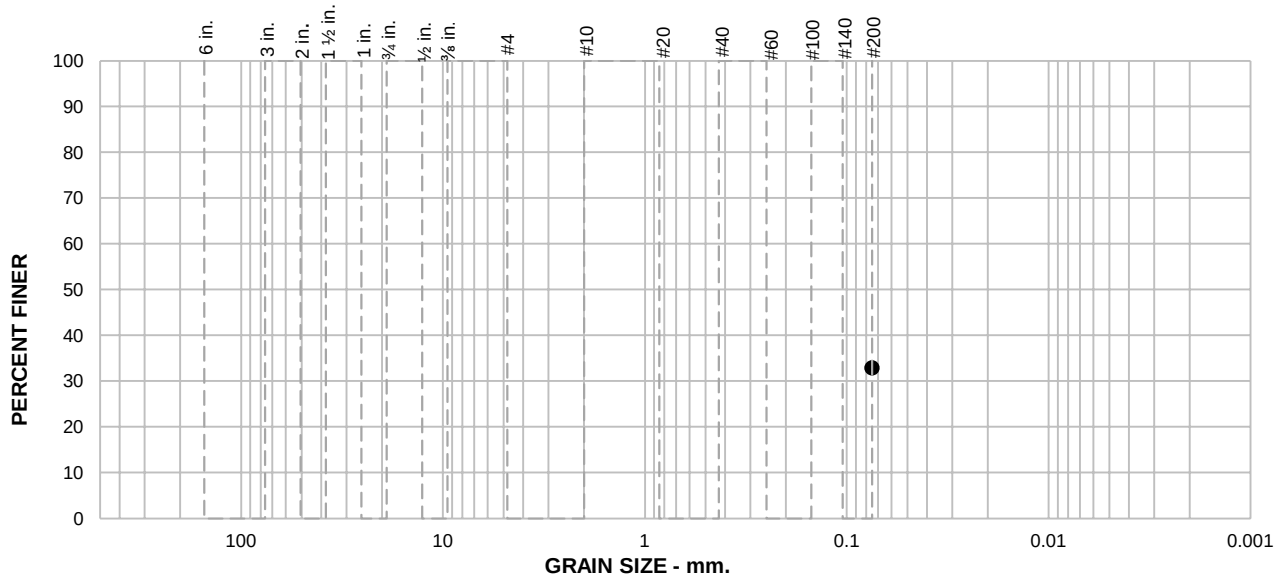

SAMPLE ID: 1-B04@15

DEPTH (ft): 15

% +75mm	% GRAVEL		% SAND			% FINES	
	COARSE	FINE	COARSE	MEDIUM	FINE	SILT	CLAY
						32.9	

SIEVE SIZE	PERCENT FINER	SPEC.* PERCENT	PASS? (X=NO)
#200	32.9		

SOIL DESCRIPTION

See exploration logs

ATTERBERG LIMITS

PL = LL = PI =

COEFFICIENTS

D_{90} = D_{85} = D_{60} =
D_{50} = D_{30} = D_{15} =
D_{10} = C_u = C_c =

CLASSIFICATION

USCS =

REMARKS

Soak time = 180 min
Dry sample weight = 215 g
Largest particle size < No. 4 Sieve

* (no specification provided)

ENGEO
Expect Excellence

CLIENT: O'Dell Engineering
PROJECT NAME: Sierra Creek Park
PROJECT NO: 21219.000.001 PH001
PROJECT LOCATION: Antelope, CA
REPORT DATE: 11/29/2022
TESTED BY: R. Montalvo
REVIEWED BY: M. Gilbert

PARTICLE SIZE DISTRIBUTION REPORT

ASTM D1140, Method B

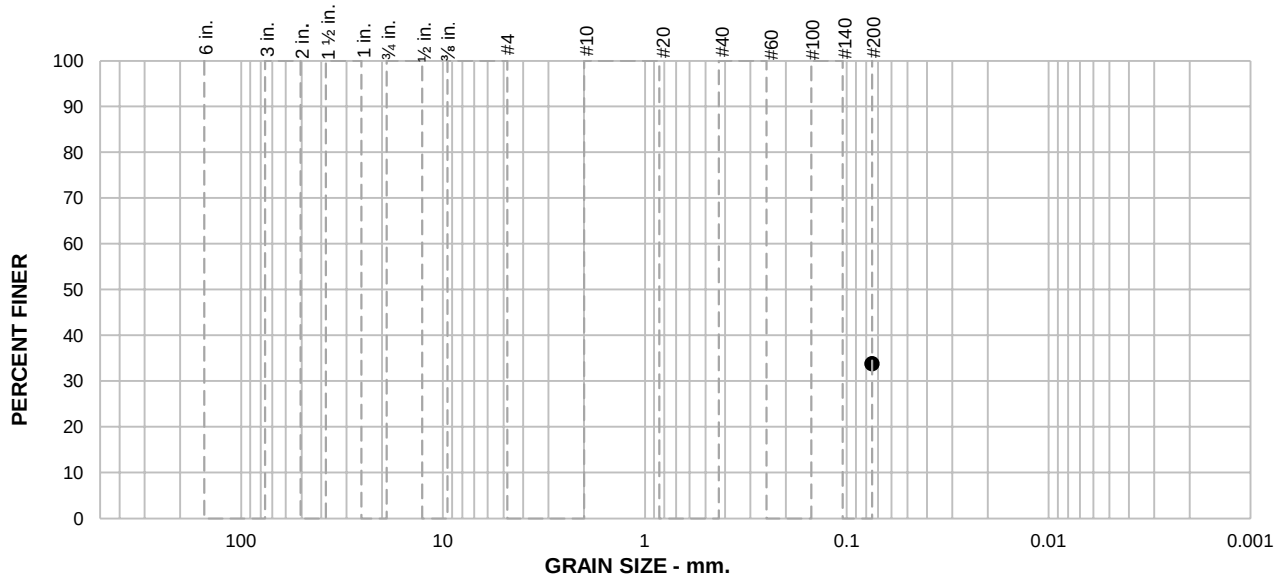

SAMPLE ID: 1-B04@2.5

DEPTH (ft): 2.5

% +75mm	% GRAVEL		% SAND			% FINES	
	COARSE	FINE	COARSE	MEDIUM	FINE	SILT	CLAY
						34	

SIEVE SIZE	PERCENT FINER	SPEC.* PERCENT	PASS? (X=NO)
#200	34		

SOIL DESCRIPTION

See exploration logs

ATTERBERG LIMITS

PL = LL = PI =

COEFFICIENTS

D_{90} = D_{85} = D_{60} =
D_{50} = D_{30} = D_{15} =
D_{10} = C_u = C_c =

CLASSIFICATION

USCS =

REMARKS

Soak time = 180 min
Dry sample weight = 300.2 g
Largest particle size ≥ No. 4 Sieve

* (no specification provided)

ENGEO — Expect Excellence

CLIENT: O'Dell Engineering

PROJECT NAME: Sierra Creek Park

PROJECT NO: 21219.000.001 PH001

PROJECT LOCATION: Antelope, CA

REPORT DATE: 11/29/2022

TESTED BY: R. Montalvo

REVIEWED BY: M. Gilbert

PARTICLE SIZE DISTRIBUTION REPORT

ASTM D1140, Method B

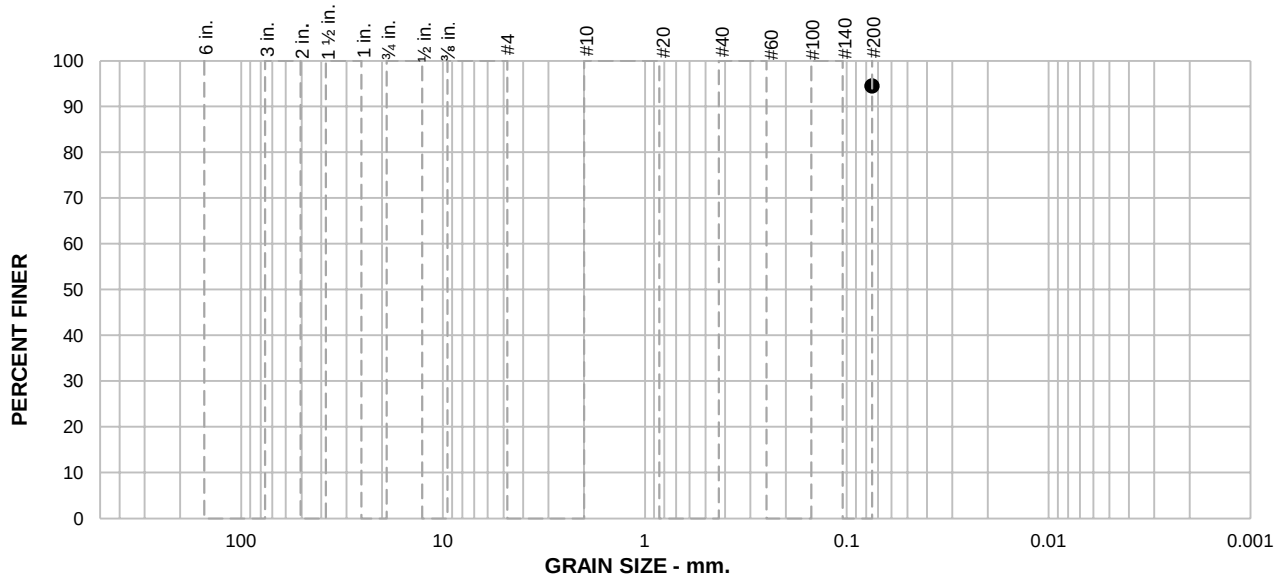

SAMPLE ID: 1-B05@15

DEPTH (ft): 15

% +75mm	% GRAVEL		% SAND			% FINES	
	COARSE	FINE	COARSE	MEDIUM	FINE	SILT	CLAY
						94.5	

SIEVE SIZE	PERCENT FINER	SPEC.* PERCENT	PASS? (X=NO)
#200	94.5		

SOIL DESCRIPTION

See exploration logs

ATTERBERG LIMITS

PL = LL = PI =

COEFFICIENTS

D_{90} = D_{85} = D_{60} =
D_{50} = D_{30} = D_{15} =
D_{10} = C_u = C_c =

CLASSIFICATION

USCS =

REMARKS

Soak time = 180 min
Dry sample weight = 136.9 g
Largest particle size < No. 4 Sieve

* (no specification provided)

ENGEO — Expect Excellence

CLIENT: O'Dell Engineering
PROJECT NAME: Sierra Creek Park
PROJECT NO: 21219.000.001 PH001
PROJECT LOCATION: Antelope, CA
REPORT DATE: 11/29/2022
TESTED BY: R. Montalvo
REVIEWED BY: M. Gilbert

PARTICLE SIZE DISTRIBUTION REPORT

ASTM D1140, Method B

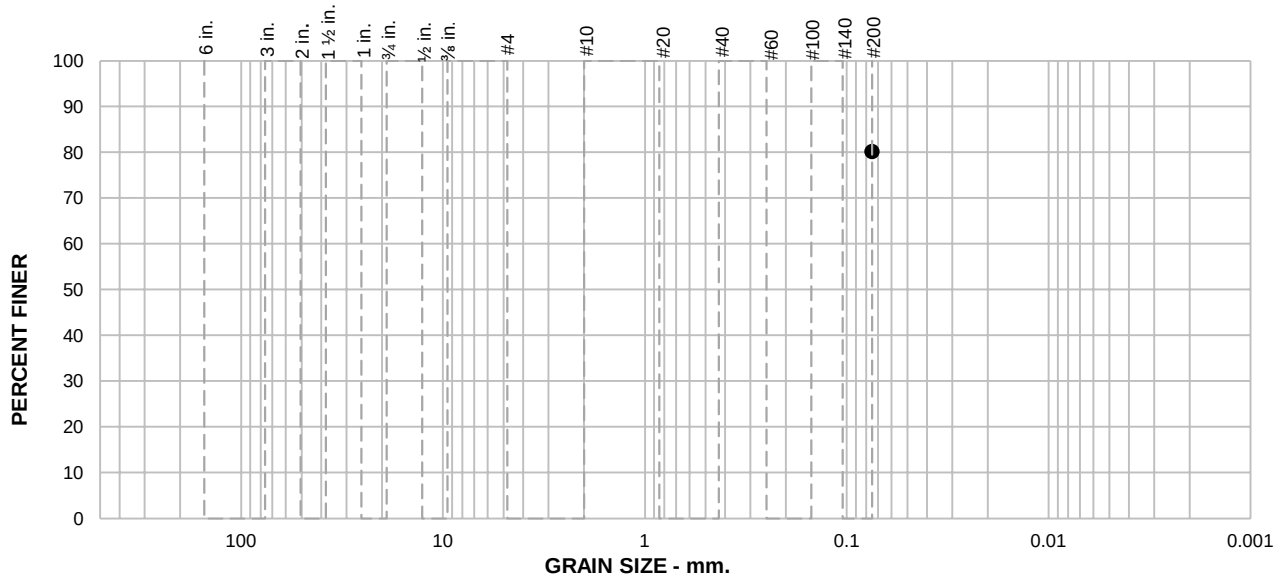

SAMPLE ID: 1-B06@1.5

DEPTH (ft): 1.5

% +75mm	% GRAVEL		% SAND			% FINES	
	COARSE	FINE	COARSE	MEDIUM	FINE	SILT	CLAY
						80.2	

SIEVE SIZE	PERCENT FINER	SPEC.* PERCENT	PASS? (X=NO)
#200	80.2		

SOIL DESCRIPTION

See exploration logs

ATTERBERG LIMITS

PL = 17 LL = 46 PI = 29

COEFFICIENTS

D_{90} = D_{85} = D_{60} =
D_{50} = D_{30} = D_{15} =
D_{10} = C_u = C_c =

CLASSIFICATION

USCS = CL

REMARKS

PI: ASTM D4318, Wet Method
USCS: ASTM D2487

Soak time = 180 min
Dry sample weight = 161.5 g
Largest particle size < No. 4 Sieve

* (no specification provided)

ENGEO
Expect Excellence

CLIENT: O'Dell Engineering
PROJECT NAME: Sierra Creek Park
PROJECT NO: 21219.000.001 PH001
PROJECT LOCATION: Antelope, CA
REPORT DATE: 11/29/2022
TESTED BY: R. Montalvo
REVIEWED BY: M. Gilbert

MOISTURE CONTENT REPORT
ASTM D2216

SAMPLE ID	1-B02@5	1-B02@10	1-B02@15	1-B05@5	1-B05@10	1-B05@15		
DEPTH (ft.)	5	10	15	5	10	15		
METHOD A OR B	B	B	B	B	B	B		
MOISTURE CONTENT (%)	11.6	21.0	34.2	11.0	15.1	40.2		

ENGEO
Expect Excellence

CLIENT: O'Dell Engineering
PROJECT NAME: Sierra Creek Park
PROJECT NO: 21219.000.001 PH001
PROJECT LOCATION: Antelope, CA
REPORT DATE: 11/22/2022
TESTED BY: R. Montalvo
REVIEWED BY: M. Gilbert

MOISTURE-DENSITY DETERMINATION REPORT
ASTM D7263

SAMPLE ID	1-B02@2	1-B02@20.5	1-B05@2					
DEPTH (ft.)	2	20.5	2					
METHOD A OR B	B	B	B					
MOISTURE CONTENT (%)	5.8	34.2	6.9					
DRY DENSITY (pcf)	98.6	84.2	105.9					

ENGEO
Expect Excellence

CLIENT: O'Dell Engineering
PROJECT NAME: Sierra Creek Park
PROJECT NO: 21219.000.001 PH001
PROJECT LOCATION: Antelope, CA
REPORT DATE: 11/22/2022
TESTED BY: R. Montalvo
REVIEWED BY: M. Gilbert

LIQUID AND PLASTIC LIMITS TEST REPORT
ASTM D4318

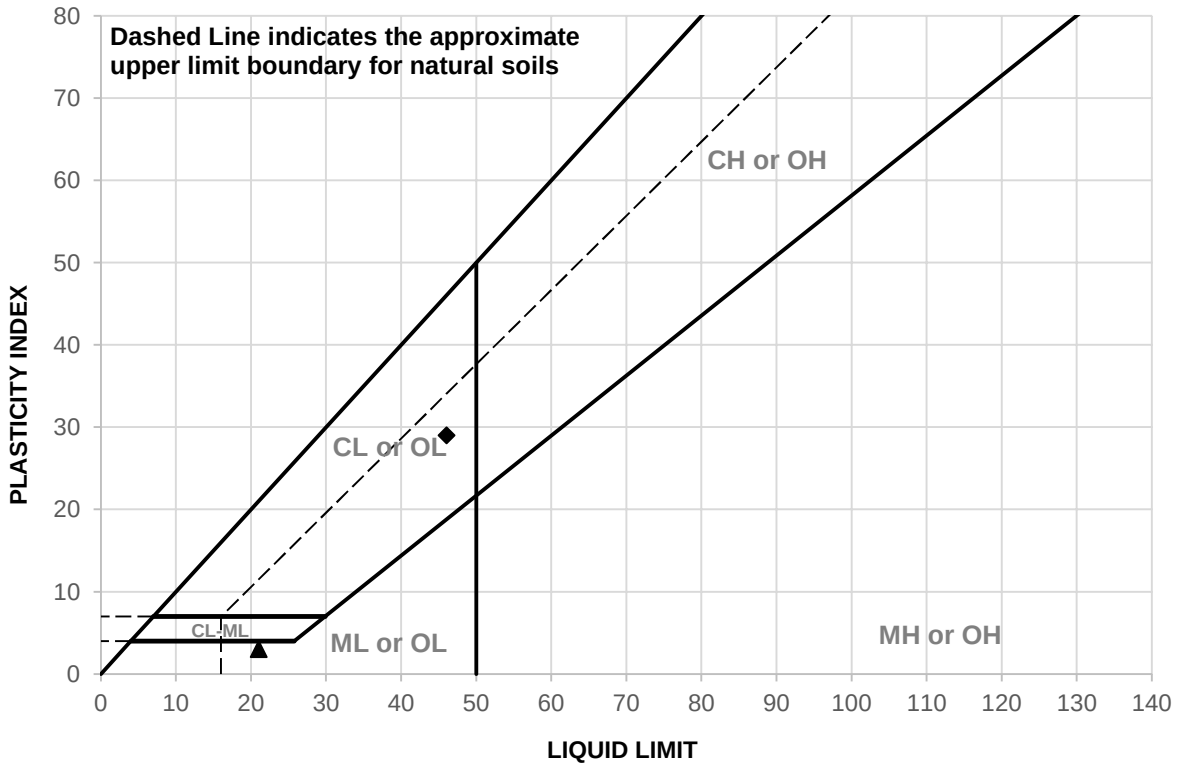

	SAMPLE ID	DEPTH (ft)	MATERIAL DESCRIPTION	LL	PL	PI
▲	1-B03@1.5	1.5	See exploration logs	21	18	3
◆	1-B06@1.5	1.5	See exploration logs	46	17	29

	SAMPLE ID	TEST METHOD	REMARKS
▲	1-B03@1.5	PI: ASTM D4318, Wet Method	
◆	1-B06@1.5	PI: ASTM D4318, Wet Method	

ENGEO
Expect Excellence

CLIENT: O'Dell Engineering
PROJECT NAME: Sierra Creek Park
PROJECT NO: 21219.000.001 PH001
PROJECT LOCATION: Antelope, CA
REPORT DATE: 11/29/2022
TESTED BY: R. Montalvo
REVIEWED BY: M. Gilbert

UNCONFINED COMPRESSION TEST REPORT
(ASTM D2166)

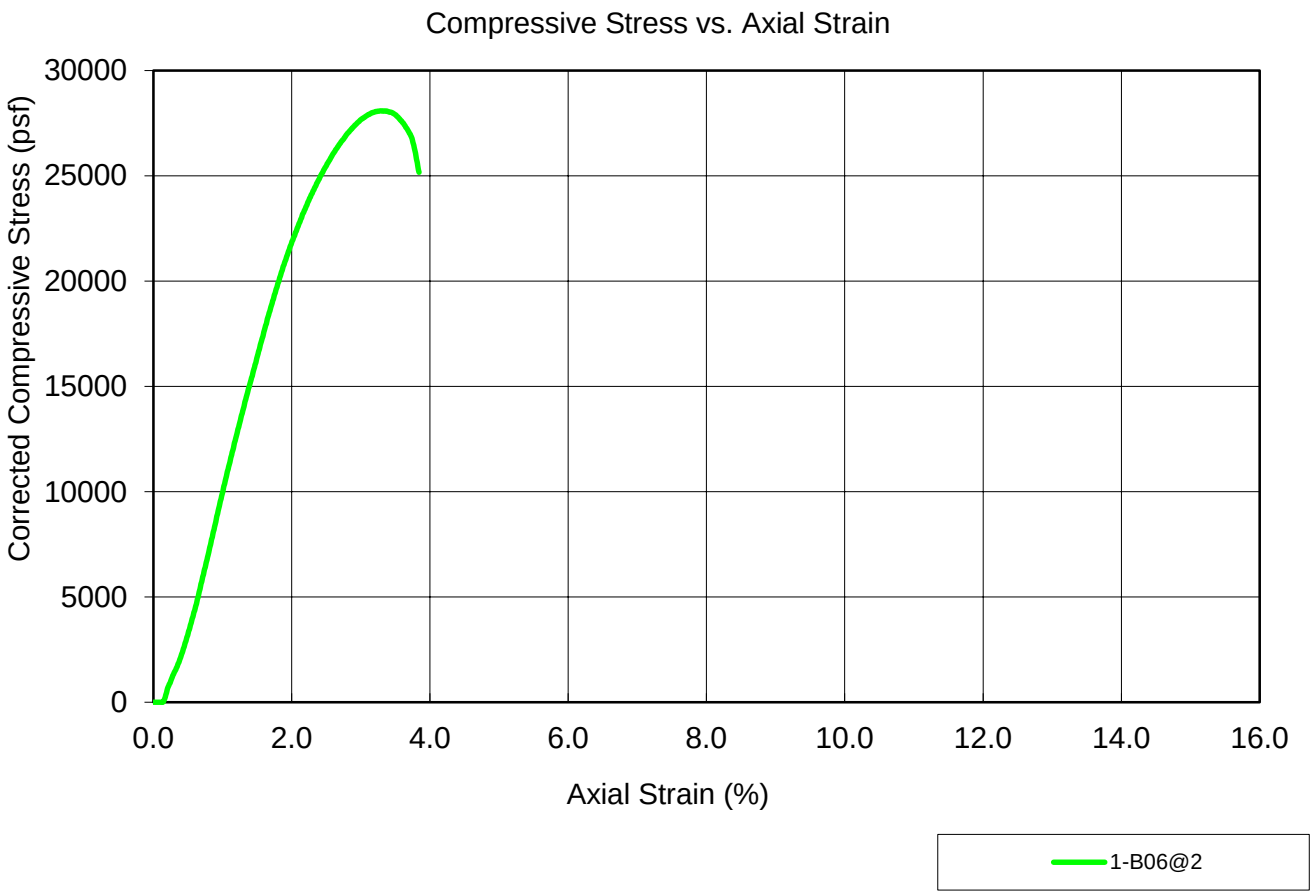

BEFORE TEST	SPECIMEN 1-B06@2
Test Moisture Content (%)	11.82
Dry Density (pcf)	120.8
Saturation (%)	79.2
Void Ratio	0.41
Diameter (in)	2.379
Height (in)	5.887
Height-To-Diameter Ratio	2.47
TEST DATA	
Unconfined Compressive Strength (psf)	28089
Undrained Shear Strength (psf)	14044.3
Strain Rate (in/min)	0.050
Specific Gravity (ASSUMED)	2.720
Strain at Failure(%)	3.28
Test Remarks	

SPECIMEN	DESCRIPTION
1-B06@2	See exploration logs

PROJECT NAME: Sierra Creek Park
PROJECT NO: 21219.000.001 PH001
CLIENT: O' Dell Engineering
LOCATION: Antelope, CA

Test Date: 12/2/22
Tested By: R. Montalvo
Reviewed By: M. Gilbert

ENGEO
Expect Excellence

ENGEO

Expect Excellence

Sunland Analytical

11419 Sunrise Gold Circle, #10
Rancho Cordova, CA 95742
(916) 852-8557

APPENDIX B

Date Reported 03/27/2024
Date Submitted 03/20/2024

To:
O'Dell Engineering-Pleasanton
6200 Stoneridge Mall Rd.#330
Pleasanton,CA 94588

From: Gene Oliphant, Ph.D. \ Randy Horney
General Manager \ Lab Manager

The reported analysis was requested for the following:
Location : SIERRA CREEK PARK Site ID : 41541-01.
Thank you for your business.

* For future reference to this analysis please use SUN # 91783-190141.

SOIL ANALYSIS

Saturation Percent (SP)	44		Soil Texture	Loam
pH	5.63			
E.C.	0.31	mmho/cm		
Tot.Dissolved Salts	198.4	ppm		
Infiltration Rate (0% Slope)	0.54	in/hr		
% Organic Matter	4.4			
C.E.C.	12.0	meq/100g		
Sodium Absorption Ratio (SAR)	1.5			
Exchangable Sodium Percent (ESP)	0.9			
Lime Req.	38.2	#/1000 sq.ft.		
est. Nitrogen Release	1.6	#/1000 sq.ft.		

Nitrate	24.25	ppm	**********
Phosphorus	14.57	ppm	**********
Potassium	80.42	ppm	**********
Sulfur	3.63	ppm	*****
Chloride	8.81	ppm	********
Carbonates	7.26	ppm	********
Sodium	25.40	ppm	
Calcium	1756.21	ppm	**********
Magnesium	357.64	ppm	**********
Boron	0.15	ppm	****
Copper	1.40	ppm	**********
Iron	66.85	ppm	**********
Manganese	51.86	ppm	**********
Zinc	2.70	ppm	**********

Very Low | Low | Adequate | Excessive

Sunland Analytical

11419 Sunrise Gold Circle, #10
Rancho Cordova, CA 95742
(916) 852-8557

DATE 03/27/2024
SUN NUMBER 190141

Information requested by:
Tim Honeck
O'Dell Engineering-Pleasanton

Information for:
SIERRA CREEK PARK
Sample ID: 41541-01

SOIL RECOMMENDATIONS FOR LANDSCAPE GARDENING

SOIL pH (Acidity and Alkalinity)

The pH of this sample indicates the soil is moderately acid and should be modified for non acid-tolerant plants. Apply 38 pounds of Lime per 1000 sq.ft. and work into ground before planting.

DISSOLVED SALTS (Indicated by E.C. & TDS)

These conditions are in the normal range for plant growth.

SOIL TEXTURE AND RATE OF WATER INFILTRATION

The infiltration rate for all soil textures decreases with increasing ground slope. At 0 to 4%, 5 to 8%, 9 to 12%, 13 to 16% and above 16% the infiltration rate of this sample decreases from 0.54 to 0.43, 0.32, 0.22, 0.14, respectively. Infiltration rate also decreases with percent of ground cover and by compaction.

WATER PENETRATION OF SOIL DUE TO CHEMICAL CHARACTERISTICS

When exchangable Sodium increases in the soil, water penetration decreases. Based on SAR and ESP values this sample has no penetration problem due to soil Sodium. No Gypsum required.

ORGANIC MATTER

Organic matter provides a slow nitrogen release and aids water retention. This sample has a moderate Organic Matter content.
To maintain moisture and provide sustained nitrogen release a level of 10% organic matter is recommended. This can be accomplished by adding 3 yards per 1000 sq.ft. of ground fir bark that is approximately 75% organic matter (i.e. typically found in ground fir bark which also has naturally low salt and boron concentrations). In California, the MWELO ordenance requires a fixed application of four yards of COMPOST if the soil organic matter is less than 6%. However, of significant concern when applying COMPOST is the potential for the compost to have high salt, high boron content, high C to N ratio and having a higly variable pH (very high to very low). All of these COMPOST characteristics can have very negative affect on plant growth. Take care by having the compost analyzed or by seeing a recent analysis of the compost to be used.

Sunland Analytical
11419 Sunrise Gold Circle, #10
Rancho Cordova, CA 95742
(916) 852-8557

DATE 03/27/2024
SUN NUMBER 190141

Information requested by:
Tim Honeck
O'Dell Engineering-Pleasanton

Information for:
SIERRA CREEK PARK
Sample ID: 41541-01

SOIL RECOMMENDATIONS FOR LANDSCAPE GARDENING

SOIL BORON

Boron concenrations are in a range allowing normal plant growth.

SOIL MICRONUTRIENTS

Micronutrients, Copper, Iron, Manganese and Zinc, in soil are present in small amounts. However, they play a necessary role in plant metabolism. Without appropriate amounts plants will not thrive. Soil has adequate amounts - no application needed.

SOIL MACRONUTRIENTS : NITROGEN-PHOSPHORUS-POTASSIUM (N-P-K)

GENERAL N-P-K RECOMMENDATION

Use ONE of these NPK preparations for the first fertilizer application.

Standard NPK Fertilizer Preparations	6-24-24	5-20-10	16-16-16	0-10-10	28-3-4	21-0-0	Customer Choice None
#/1000 sq.ft.	N/A	N/A	N/A	16	N/A	N/A	N/A

GRASS OR SOD PREPARATION

Till in organic matter, N,P,K and micro nutrients in addition to any lime gypsum or sulfur as directed above. Smooth soil surface and follow seed or sod producers direction for moisture and product application.

TREES AND SHRUBS

Excavate holes for planting shrubs and trees to at least twice the volume of the container. Prepare backfill for tree and shrub planting holes by mixing three parts of native soil (or imported top soil) with one part organic amendment (preferably nitrogen and iron fortified) and 2.5 pounds of 6-24-24 per yard of mix. For extended fertilization, place slow release fertilizer tablets in each hole per manufacturer's instructions. If 6-24-24 was not directly added to backfill mix, during backfill apply uniformly 1/2 oz of 6-24-24 per gallon containers, 2.5 oz per 5 gallons, 6 oz per 24 inch boxes.

Sunland Analytical
11419 Sunrise Gold Circle, #10
Rancho Cordova, CA 95742
(916) 852-8557

DATE 03/27/2024
SUN NUMBER 190141

Information requested by:
Tim Honeck
O'Dell Engineering-Pleasanton

Information for:
SIERRA CREEK PARK
Sample ID: 41541-01

SOIL RECOMMENDATIONS FOR LANDSCAPE GARDENING

Summary and Suggested Sequence of Soil Improvements (#/1000 Sq.Ft.)

Lime	38	#
Organic Amendment	3	Yd./1000 Sq.Ft. Bulk organic amendment (nitrified). or in Calif. if Org.Mat. less than 6% use 4 yd compost.
N-P-K Fertilizer	See above chart	
Sulfate-Sulfur	2	# Ammonium Sulfate

Maintenance Fertilization

Apply 5 pounds of Ammonium sulfate (21-0-0) per 1000 sq.ft.every month until plants become established. After established, apply 28-3-4 (or similar preparation) to provide desired growth rate and color.

SUNLAND ANALYTICAL LAB
11419 Sunrise Gold Cr., Ste.10
Rancho Cordova, CA 95742
(916)852-8557

INVOICE
=======

Inv.No. 111783

O'Dell Engineering-Pleasanton
6200 Stoneridge Mall Rd.#330
Pleasanton,CA 94588

Date 03/27/2024
Terms: NET 30, 30+ 15%
Customer P.O.#
Requestor: Honeck
* Please indicate Invo.# on remittance

ATTENTION ACCOUNTS PAYABLE

SUN NOS.	SAMPLE LOCATION		ANALYSIS	PRICE
190141	SIERRA CREEK PARK	41541-01	LTP.4	114.00
	********* Total *********			114.00

DEFERRED SUBMITTALS

1. BRIDGE - CONTRACTOR TO PROVIDE DETAILED ENGINEERED SHOP DRAWINGS FOR SACRAMENTO COUNTY APPROVAL BEFORE PROCUREMENT AND INSTALLATION.
2. RESTROOM BUILDING (PROVIDED BY OWNERS). CONTRACTOR TO SUBMIT BUILDING PLANS TO COUNTY FOR PERMITTING APPROVAL.
3. PLAYGROUND EQUIPMENT FOOTINGS - CONTRACTOR TO SUBMIT STRUCTURAL DETAILS AND CALCULATIONS, IF REQUIRED.
4. ELECTRICAL POWER AND LIGHTING PLANS - CONTRACTOR TO SUBMIT ELECTRICAL ENGINEERING PLANS TO BUILDING DEPARTMENT FOR APPROVAL.

PLANNING AND ENVIROMENTAL REVIEW SUBMITTAL
CONTROL NUMBER DRCP 2024-00055
SIERRA CREEK PARK
APN 203-0310-045
DESIGN REVIEW DETERMINATION LETTER DATED DECEMBER 11, 2024
SUBSTANTIAL COMPLIANCE ACHIEVED

SURVEY CONTROL

HORIZONTAL DATUM
NORTH AMERICAN DATUM OF 1983 (NAD83).

COORDINATE SYSTEM
COORDINATES SHOWN HEREON ARE BASED ON THE CALIFORNIA COORDINATE SYSTEM OF 1983 (CCS83), ZONE II.

VERTICAL DATUM
NORTH AMERICAN VERTICAL DATUM OF 1988 (NAVD88).

PROJECT BENCHMARK
FD 2" BRASS DISK STAMPED "SACRAMENTO COUNTY DEPT. OF PUBLIC WORKS 7-61" LOCATED ATOP NORTHEAST ABUTMENT ON THE NORTH SIDE OF WATT AVE., APPROX. 0.4 MI. NORTH OF ANTELOPE RD., APPROX. 0.2 MI NORTH OF BLACKFOOT WAY, APPROX. 0.5 MI. SOUTH OF ELVERTA RD. PER SACRAMENTO COUNTY BENCHMARK LIST.
ELEVATION = 86.43 FEET (NAVD88)

NAVD88 CONVERSION TO NGVD29: ELEVATION (NAVD88) - 2.56 FEET = NAVD29

CONTROL POINT TABLE

POINT	NORTHING	EASTING	DESCRIPTION
15000	2020719.44	6736981.66	FD BM 7-61 86.43
15001	2020230.28	6736885.32	SET IP
15002	2020652.09	6736844.75	SET IP
15003	2020685.46	6736937.35	SET MAG IN MEDIAN
15005	2020822.36	6736574.57	SET MAG MEDIAN
15006	2020454.34	6737280.88	SET MAG SHINER

WDID: 5S34C410556

CONSTRUCTION START DATE: TBD	
FINAL STABILIZATION DATE: TBD	
AREA OF DISTURBANCE (AC.): 3.5 AC	
VOL. OF CUT (CY): 4,680	VOL. OF FILL (CY): 3880
POST-CONST. STORMWATER BMP'S REQ? (Y/N): YES	

NOTE TO INSPECTOR:
PRIOR TO FINAL ACCEPTANCE, THE PUBLIC ROADWAY AND PUBLIC UTILITIES EASEMENT (PRPUE) AND PUBLIC UTILITIES AND PUBLIC FACILITIES EASEMENT (PUPFE) ON WATT AVE SHALL BE SUBMITTED, APPROVED, AND RECORDED TO THE SATISFACTION OF THE DEPARTMENT OF TRANSPORTATION.

NOTE TO INSPECTOR:
PRIOR TO FINAL ACCEPTANCE OF THE IMPROVEMENTS SHOWN ON THESE PLANS, THE IMPROVEMENTS SHOWN ON THE "7781 WATT AVE OFF-SITE" PLANS (ORDER NO. #90019087) SHALL BE COMPLETED AND ACCEPTED BY CMID.

CALIFORNIA AMERICAN WATER DISTRICT

APPROVED FOR CONSTRUCTION OF WATER SYSTEM:
FILE NO: 142.6312
WBS: D15.8001.P.0700

BY: DATE:

NOTE: THIS PLAN EXPIRES ONE YEAR FROM APPROVAL

SACRAMENTO METRO FIRE DISTRICT

APPROVED AS TO FIRE SERVICE LOCATIONS ONLY. MAIN SIZE DETERMINED BY SACRAMENTO SUBURBAN WATER DISTRICT.

BY: DATE:

APPROVED BY NORTH HIGHLANDS RECREATION AND PARKS DISTRICT:

BY: DATE:

CIVIL IMPROVEMENT PLANS FOR:

7781 WATT AVE

SIERRA CREEK COMMUNITY PARK

IMPROVEMENT PLANS

ANTELOPE, SACRAMENTO COUNTY, CALIFORNIA

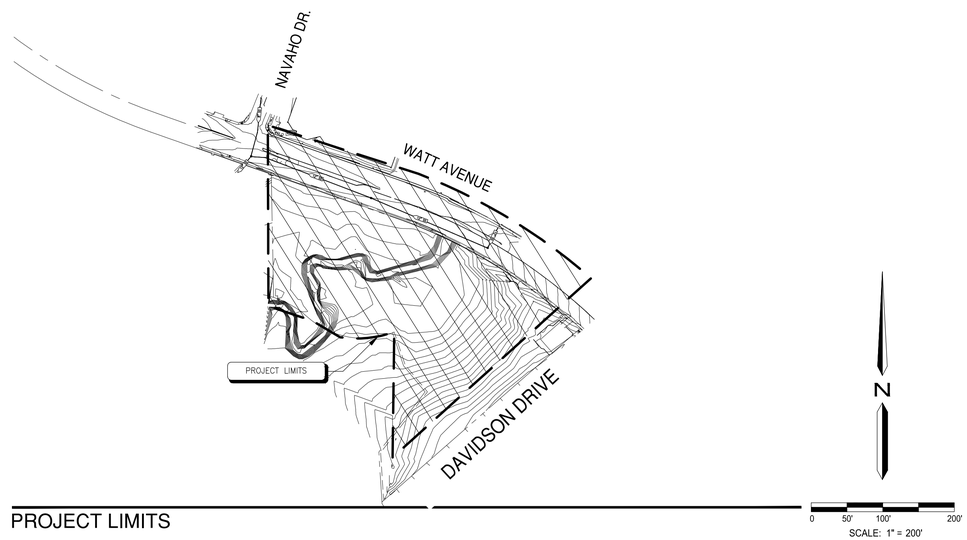

PROJECT LIMITS

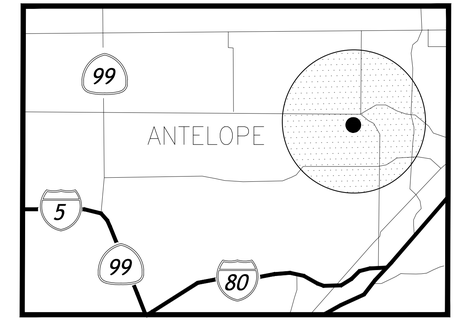

SHEET INDEX

GENERAL
G0.0 GENERAL NOTES/MITIGATION MEASURES
G0.1 FIRE ACCESS PLAN

CIVIL
C1.0 GENERAL NOTES
C1.1 GENERAL NOTES
C2.1 GRADING PLAN
C2.2 GRADING PLAN
C3.1 UTILITY PLAN
C3.2 UTILITY PLAN
C4.1 TRAFFIC SIGNING & STRIPING
C5.1 POST CONSTRUCTION STORMWATER QUALITY PLAN (PCSQP)
C5.2 POST CONSTRUCTION STORMWATER QUALITY PLAN (PCSQP)
C6.1 DETAILS
C6.2 DETAILS
C6.3 DETAILS
EC 1.1 EROSION CONTROL PLAN
EC 1.2 EROSION CONTROL PLAN

TOPOGRAPHIC SURVEY (FOR REFERENCE)
T1.0–T5.0 TOPOGRAPHIC SURVEY

PROJECT INFORMATION

PROJECT TITLE:	7781 WATT AVE SIERRA CREEK COMMUNITY PARK	PROJECT TYPE:	PARK RENOVATION
PARCEL NUMBER:	203–0310–045	ADJACENT PROPERTY USES:	NORTH – NEW RESIDENTIAL DEVELOPMENT SOUTH – SCHOOL EAST – RESIDENTIAL WEST – RESIDENTIAL
PROJECT ADDRESS:	7781 WATT AVE AND DAVIDSON DRIVE, ANTELOPE, CA, 95843	GEOTECHNICAL REPORT:	BY ENGEO DATED 12/12/2022, UPDATED 04/17/2025
APPLICANT/OWNER:	NORTH HIGHLANDS RECREATION AND PARK DISTRICT		
PLANS PREPARED BY:	WESTWOOD PROFESSIONAL SERVICES 6200 STONERIDGE MALL ROAD, SUITE 330 PLEASANTON, CA 94588 (925) 223–8340 OFFICE EMAIL: KAREN.FOLSOM@WESTWOODPS.COM	TOPOGRAPHIC SURVEY:	BY O'DELL ENGINEERING, A WESTWOOD COMPANY DATED 03/06/2023
LICENSE NUMBER:	CLA #4994	ARBORIST REPORT:	BY AECOM, DATED 09/23/2020
LANDSCAPE AREA	230,864 SQUARE FEET		

PROJECT TEAM

LANDSCAPE ARCHITECT:
KAREN FOLSOM
WESTWOOD PROFESSIONAL SERVICES
6200 STONERIDGE MALL ROAD, SUITE 330
PLEASANTON, CA 94588
(925) 223-8340 KAREN.FOLSOM@WESTWOODPS.COM

CIVIL:
ROBERT CHEN
WESTWOOD PROFESSIONAL SERVICES
6200 STONERIDGE MALL ROAD, SUITE 330
PLEASANTON, CA 94588
(925) 223-8340 ROBERT.CHEN@WESTWOODPS.COM

SURVEY:
SCOTT ROBERTS
WESTWOOD PROFESSIONAL SERVICES
7110 N FRESNO STREET, #160
FRESNO, CA 93720
(559) 451-0395
SCOTT.ROBERTS@WESTWOODPS.COM

ELECTRICAL
KEVIN PEZZONI
PEZZONI ENGINEERING
1150 9TH STREET, SUITE 1415
MODESTO, CA 95354
(209) 554-4602
KPEZZONI@PEZENGR.COM

STRUCTURAL
NICK FAHRNEY
PELTON WYLIE + FAHRNEY
2813 COFFEE ROAD, SUITE D1
MODESTO, CA 95355
(209) 575-9619
NICK@PWF-ENG.COM

NOTE TO INSPECTOR:
20 DAYS PRIOR TO BEGINNING THE IMPORT OR EXPORT OF MATERIAL, THE OWNER/CONTRACTOR SHALL PROVIDE THE PROPOSED HAUL ROUTE, SIZE OF TRUCKS BEING USED FOR TRANSPORT, DURATION OF HAUL OPERATION, TOTAL HAUL VOLUME IN CUBIC YARDS OR TONS, AND THE DATES/TIMES OF THE PROPOSED HAUL. THE OWNER/CONTRACTOR SHALL NOT COMMENCE THE IMPORT OR EXPORT OF MATERIAL UNTIL THE INFORMATION PROVIDED HAS BEEN REVIEWED AND APPROVED BY THE COUNTY.

SACRAMENTO COUNTY
PUBLIC WORKS AND INFRASTRUCTURE AGENCY

PROJECT TITLE: 7781 WATT AVENUE, ANTELOPE, CA	
ASSESSORS PARCEL NO: 203-0310-045	
APPROVED:	
ORDER NUMBER: 90017754	DRAINAGE FEE:
CHECKED BY:	DRAINAGE APPROVED:

Know what's **below.**
Call before you dig.

Westwood
Westwood Professional Services, Inc.
6200 STONERIDGE MALL ROAD, SUITE 330
PLEASANTON, CA 94588
T: 925.223.8340

NO.	DESCRIPTION	DATE	BY	APP. DATE	APP.

ANTELOPE, CALIFORNIA

NHRPD SIERRA CREEK PARK

7781 WATT AVE
COVER SHEET

DATE: 08/31/2026
DRAFTER: TH, AL, CY
DESIGNER: KF, TH
CHECKED: KF, JG
PROJECT NO. 41541

REGISTERED PROFESSIONAL ENGINEER ROBERT I. CHEN 59425 CIVIL STATE OF CALIFORNIA

CS

Last Saved by: MALourenco
Plot Date/Time: 8/31/2026 1:59:58 PM
Drawing: N:_DOE\Pleasanton\41541 NHRPD Sierra Creek Park\Landscape\Const\Plans\41541-CS - SIPS

GENERAL NOTES

1. SITE IMPROVEMENTS SHALL BE CONSTRUCTED IN COMPLIANCE WITH SACRAMENTO COUNTY, CALIFORNIA CURRENT STANDARDS AND SPECIFICATIONS. IN THE EVENT THERE IS A CONFLICT WITH THE PLANS AND REFERENCES STATED ABOVE, THE GOVERNING BODY STANDARDS AND SPECIFICATIONS SHALL PREVAIL. ALL WORK SHALL BE SUBJECT TO INSPECTION.
2. DESIGN: THE DRAWINGS HEREIN REPRESENT THE DESIGN TO BE IMPLEMENTED ON THE SITE DEPICTED. THE CONTRACTOR SHALL BE RESPONSIBLE FOR CONTACTING THE LANDSCAPE ARCHITECT TO CLARIFY PLAN DETAILS RELATED TO SITE OR CONSTRUCTION DETAILS NECESSARY FOR PROJECT COMPLETION.
3. COORDINATION: CONTRACTORS SHALL COORDINATE INSTALLATION AND SCHEDULING WITH THAT OF OWNER/OWNER REPRESENTATIVE AND OTHER CONTRACTORS EFFICIENTLY AND IN A TIMELY MANNER, ENSURING THE PROJECT COMPLETION IS UNIMPEDED AND INSTALLED CORRECTLY WITH MINIMAL MAINTENANCE. OWNER/OWNER REPRESENTATIVE SHALL BE CONTACTED DIRECTLY AT LEAST TWO WORKING DAYS (48 HOURS) PRIOR TO COVERING, COMPLETION, OR EXPOSING WORK THAT WILL BE INSTALLED.
4. SITE CONDITIONS: SEE GENERAL PROVISIONS, SPECIAL PROVISIONS, GENERAL REQUIREMENTS, AND TECHNICAL SPECIFICATIONS FOR CONTRACTOR RESPONSIBILITIES RELATED TO SITE CONDITIONS. CONTRACTOR SHALL EXAMINE EXISTING CONDITIONS OF SITE. IN THE EVENT THAT ON-SITE CONDITIONS DIFFER FROM CONDITIONS DEPICTED ON PLANS AND WILL IMPACT THE INSTALLATION PROCESS, THE CONTRACTOR SHALL SUBMIT THESE FINDINGS TO THE OWNER REP IN WRITING PRIOR TO BEGINNING WORK. COMMENCEMENT OF WORK IMPLIES ACCEPTANCE OF THE EXISTING SITE CONDITIONS.
5. BIDDING INFORMATION: SEE GENERAL PROVISIONS, SPECIAL PROVISIONS, GENERAL REQUIREMENTS, AND TECHNICAL SPECIFICATIONS FOR CONTRACTOR RESPONSIBILITIES RELATED TO BIDDING INFORMATION AND SITE VISITS PRIOR TO BID SUBMITTAL.
6. UTILITIES: THE CONTRACTOR AND ANY SUBCONTRACTORS SHALL CONTACT U.S.A. AT LEAST TWO WORKING DAYS (48 HOURS) PRIOR TO BEGINNING WORK.
7. POT HOLING: ONLY EXCAVATION WILL REVEAL ACTUAL TYPES, LOCATIONS, SIZES, AND DEPTHS OF UNDERGROUND UTILITIES. THE LANDSCAPE ARCHITECT ASSUMES NO RESPONSIBILITY FOR THE ACCURACY OF UNDERGROUND UTILITIES OR OF BURIED EXISTING OBJECTS AND UTILITIES NOT SHOWN ON THESE PLANS.
8. AS-BUILTS: FOR AS-BUILT PURPOSES, THE CONTRACTOR SHALL KEEP A CURRENT SET OF DRAWINGS ON SITE AT ALL TIMES WITH DEVIATIONS FROM ORIGINAL PLANS AND SPECIFICATIONS NOTED. UPON PROJECT COMPLETION THE CONTRACTOR SHALL PROVIDE THE DISTRICT WITH A DIGITAL FORMAT, COMPLETE SET OF AS-BUILT DRAWINGS.

MITIGATION MEASURE A: SMAQMD BASIC CONSTRUCTION EMISSION CONTROL PRACTICES

COMPLY WITH BASIC CONSTRUCTION EMISSION CONTROL PRACTICES IDENTIFIED BY THE SMAQMD AND LISTED BELOW OR AS THEY MAY BE UPDATED IN THE FUTURE:

1. WATER ALL EXPOSED SURFACES TWO TIMES DAILY. EXPOSED SURFACES INCLUDE, BUT ARE NOT LIMITED TO SOIL PILES, GRADED AREAS, UNPAVED PARKING AREAS, STAGING AREAS, AND ACCESS ROADS.
2. COVER OR MAINTAIN AT LEAST TWO FEET OF FREE BOARD SPACE ON HAUL TRUCKS TRANSPORTING SOIL, SAND, OR OTHER LOOSE MATERIAL ON THE SITE. ANY HAUL TRUCKS THAT WOULD BE TRAVELING ALONG FREEWAYS OR MAJOR ROADWAYS SHOULD BE COVERED.
3. USE WET POWER VACUUM STREET SWEEPERS TO REMOVE ANY VISIBLE TRACK OUT MUD OR DIRT ONTO ADJACENT PUBLIC ROADS AT LEAST ONCE A DAY. USE OF DRY POWERED SWEEPING IS PROHIBITED.
4. LIMIT VEHICLE SPEEDS ON UNPAVED ROADS TO 15 MILES PER HOUR (MPH).
5. ALL ROADWAYS, DRIVEWAYS, SIDEWALKS, PARKING LOTS TO BE PAVED SHOULD BE COMPLETED AS SOON AS POSSIBLE. IN ADDITION, BUILDING PADS SHOULD BE LAID AS SOON AS POSSIBLE AFTER GRADING UNLESS SEEDING OR SOIL BINDERS ARE USED.
6. MINIMIZE IDLING TIME EITHER BY SHUTTING EQUIPMENT OFF WHEN NOT IN USE OR REDUCING THE TIME OF IDLING TO 5 MINUTES [REQUIRED BY CALIFORNIA CODE OF REGULATIONS, TITLE 13, SECTIONS 2449(D) AND 2485]. PROVIDE CLEAR SIGNAGE THAT POSTS THIS REQUIREMENT FOR WORKERS AT THE ENTRANCES TO THE SITE.
7. PROVIDE CURRENT CERTIFICATE(S) OF COMPLIANCE FOR CARB'S IN-USE OFF-ROAD DIESEL-FUELED FLEETS REGULATION [CALIFORNIA CODE OF REGULATIONS, TITLE 13, SECTIONS 2449 AND 2449.1], FOR MORE INFORMATION CONTACT CARB AT 877-593-6677, DOORS@ARB.CA.GOV, OR WWW.ARB.CA.GOV/DOORS/COMPLIANCE CERT1HTML
8. MAINTAIN ALL CONSTRUCTION EQUIPMENT IN PROPER WORKING CONDITION ACCORDING TO MANUFACTURER'S SPECIFICATIONS. THE EQUIPMENT MUST BE CHECKED BY A CERTIFIED MECHANIC AND DETERMINED TO BE RUNNING IN PROPER CONDITION BEFORE IT IS OPERATED.

MITIGATION MEASURE B: IMPLEMENT MEASURES TO REDUCE SHORT-TERM, CONSTRUCTION-RELATED NOISE

1. PROVIDE WRITTEN NOTIFICATION TO THE RESIDENTS SOUTH OF THE PROJECT SITE AND WITHIN 500 FEET FROM THE SOUTHERN PROJECT BOUNDARY AT LEAST THREE WEEKS PRIOR TO CONSTRUCTION, IDENTIFYING THE TYPE, DURATION, AND FREQUENCY OF CONSTRUCTION ACTIVITIES. NOTIFICATION MATERIALS WILL ALSO IDENTIFY A MECHANISM FOR RESIDENTS TO CONTACT REGARDING CONSTRUCTION NOISE. POST CONTACT INFORMATION IN THE CONSPICUOUS LOCATIONS ADJACENT TO THE SITE WITH CONTACT INFORMATION REGARDING CONSTRUCTION NOISE AND ACTIVITIES. THE NOTIFICATION WILL INCLUDE ANTICIPATED DATES AND HOURS DURING WICH CONSTRUCTION ACTIVITIES ARE ANTICIPATED TO OCCUR AND CONTACT INFORMATION, INCLUDING A DAYTIME TELEPHONE NUMBER, FOR THE PROJECT REPRESENTATIVE TO BE CONTACTED IN THE EVENT THAT NOISE LEVELS ARE DEEMED EXCESSIVE. RECOMMENDATIONS TO ASSIST NOISE-SENSITIVE LAND USES IN REDUCING INTERIOR NOISE LEVELS (E.G., CLOSING WINDOWS AND DOORS) WILL BE INCLUDED IN THE NOTIFICATION. IF THERE IS COMMUNICATION-RELATED TO CONSTRUCTION NOISE, IMPLEMENT FEASIBLE METHODS TO REDUCE NOISE EXPOSURE EFFECTS, SUCH AS SHIELDING, CHANGING THE LOCATION OF STATIONARY SOURCES, AND CHANGING CONSTRUCTION HOURS.
2. PROHIBIT THE START-UP OF MACHINES OR EQUIPMENT BEFORE PLACE BETWEEN THE HOURS OF 8:00 P.M. AND 6:00 A.M. ON WEEKDAYS AND FRIDAY COMMENCING AT 8:00 P.M. THROUGH AND INCLUDING 7:00 A.M. ON SATURDAY. SATURDAY'S COMMENCING AT 8:00 P.M. THROUGH AND INCLUDING 7:00 A.M. ON THE NEXT FOLLOWING SUNDAY AND ON EACH SUNDAY AFTER THE HOUR OF 8:00 P.M.
3. PROHIBIT USE OF MATERIALS AND EQUIPMENT DELIVERIES BEFORE 7:00 A.M. AND AFTER 7:00 P.M., MONDAY THROUGH SATURDAY AND BEFORE 9:00 A.M. AND PAST 5:00 P.M. ON SUNDAY.
4. RESTRICT THE USE OF BELLS, WHISTLES, ALARMS, AND HORNS TO SAFETY-WARNING PURPOSES.
5. EQUIP ALL CONSTRUCTION EQUIPMENT WITH NOISE-REDUCTION DEVICES, SUCH AS MUFFLERS TO MINIMIZE CONSTRUCTION NOISE D OPERATE ALL INTERNAL COMBUSTION ENGINES WITH EXHAUST AND INTAKE SILENCERS.
6. LOCATE FIXED CONSTRUCTION EQUIPMENT (E.G., COMPRESSORS AND GENERATORS), CONSTRUCTION STAGING AND STOCKPILING AREAS, AND CONSTRUCTION VEHICLE ROUTES AS FAR AS FEASIBLE FROM NOISE-SENSITIVE RECEPTORS, THE NORTHERN PORTION OF THE SITE, AND/OR OFF-SITE STAGING AREAS NORTH OF THE SITE.

MITIGATION MEASURE C: CONDUCT BOTANICAL SURVEYS FOR SANFORD'S ARROWHEAD; AVOID PLACING PEDESTRIAN BRIDGES OVER SANFORD'S ARROWHEAD POPULATIONS

RETAIN A QUALIFIED BOTANIST TO CONDUCT A SURVEY TO MAP THE EXTENT OF SANFORD'S ARROWHEAD IN THE PROJECT AREA DURING ITS BLOOM PERIOD (I.E., MAY THROUGH OCTOBER) AT LEAST 1 YEAR PRIOR TO THE INITIATION OF CONSTRUCTION. FINAL DESIGN OF PEDESTRIAN BRIDGES OVER SIERRA CREEK WOULD BE LOCATED TO AVOID DISTURBANCE TO OR SHADING OF THESE POPULATIONS OF SANFORD'S ARROWHEAD.

MITIGATION MEASURE D: AVOID IMPACTS ON WESTERN POND TURTLE DURING CONSTRUCTION

IMPLEMENT THE MEASURES LISTED BELOW TO AVOID IMPACTS ON WESTERN POND TURTLE DURING PROJECT CONSTRUCTION:

1. WHERE FEASIBLE, CONSTRUCTION ACTIVITIES INVOLVING CONSTRUCTION WITH HEAVY EQUIPMENT (E.G., EXCAVATION, GRADING, CONTOURING) WITHIN SUITABLE WESTERN POND TURTLE UPLAND HABITAT (I.E., ANY UNDEVELOPED AREAS WITHIN 1,300 FEET OF SIERRA CREEK) WOULD AVOID THE WESTERN POND TURTLE NESTING PERIOD (GENERALLY MID-MAY TO EARLY JULY).
2. IF GROUND-DISTURBING ACTIVITIES OCCUR DURING THE NESTING SEASON, THE DISTRICT WOULD RETAIN A QUALIFIED BIOLOGIST PRIOR TO THE START OF CONSTRUCTION TO CONDUCT PRE-CONSTRUCTION SURVEYS AND MONITOR CONSTRUCTION. IF NEEDED, PRECONSTRUCTION SURVEYS WOULD BE CONDUCTED WITHIN SUITABLE WESTERN POND TURTLE AQUATIC AND UPLAND HABITAT 1 WEEK BEFORE AND WITHIN 24 HOURS OF BEGINNING WORK WITHIN SUITABLE WESTERN POND TURTLE UPLAND HABITAT (I.E., ANY UNDEVELOPED AREAS WITHIN 1,300 FEET OF SIERRA CREEK).

THE SURVEYS WOULD BE TIMED TO COINCIDE WITH THE TIME OF DAY WHEN TURTLES ARE MOST LIKELY TO BE ACTIVE (THE COOLER PART OF THE DAY BETWEEN 8:00 A.M. AND 12:00 P.M. DURING SPRING AND SUMMER). PRIOR TO CONDUCTING THE SURVEYS, THE BIOLOGIST WOULD LOCATE THE MICROHABITATS FOR TURTLE BASKING (FLOATING VEGETATION MATS) AND DETERMINE A LOCATION TO QUIETLY OBSERVE TURTLES. EACH SURVEY WOULD INCLUDE A 30-MINUTE WAIT TIME AFTER ARRIVING ON THE SITE TO ALLOW STARTLED TURTLES TO RETURN TO OPEN BASKING AREAS. THE SURVEY WOULD CONSIST OF A MINIMUM 15-MINUTE OBSERVATION TIME PER AREA WHERE TURTLES COULD BE OBSERVED. IF WESTERN POND TURTLES ARE OBSERVED DURING EITHER SURVEY, THE DISTRICT WOULD CONSULT WITH CDFW TO DETERMINE THE BEST COURSE OF ACTION TO AVOID HARM AND HARASSMENT OF INDIVIDUALS.

MITIGATION MEASURE E: CONDUCT A PRECONSTRUCTION SURVEY FOR NESTING BIRDS AND RAPTORS, AND IMPLEMENT AVOIDANCE MEASURES, AS NEEDED

IF PROJECT IMPLEMENTATION IS TO OCCUR DURING THE BIRD BREEDING SEASON (FEBRUARY 1 THROUGH AUGUST 31), THE DISTRICT WOULD RETAIN A QUALIFIED BIOLOGIST TO CONDUCT PRECONSTRUCTION SURVEYS NO MORE THAN 7 DAYS PRIOR TO THE START OF PROJECT CONSTRUCTION. THE SURVEY WOULD DETERMINE IF ACTIVE NEST SITES FOR ANY AVIAN SPECIES PROTECTED UNDER THE FEDERAL MBTA OCCUR WITHIN ALL PROJECT WORK AREAS AND A 300-FOOT BUFFER. IF WORK IS CONDUCTED OUTSIDE OF THIS TIMEFRAME, THEN NO PRECONSTRUCTION SURVEYS ARE NECESSARY. IF AN ACTIVE NEST (DEFIED AS A BIRD BUILDING A NEST, SITTING ON A NEST, CARRYING FOOD TO YOUNG, ETC.) IS FOUND, THEN A 100-FOOT BUFFER WOULD BE ESTABLISHED. AT THE DISCRETION OF THE QUALIFIED BIOLOGIST, THE BUFFER FOR CERTAIN SPECIES MAY BE REDUCED TO PERMIT PROJECT IMPLEMENTATION TO OCCUR (DEPENDING ON THE DURATION, INTENSITY, AND TYPE OF WORK THAT IS NECESSARY). THE BIOLOGIST WOULD MONITOR AS NEEDED TO ENSURE THAT NO HARASSMENT OR POTENTIAL TAKE OCCURS. THE BIOLOGIST WOULD HAVE THE AUTHORITY TO STOP WORK IF THEY DETERMINE THAT THE ACTIVITY MAY RESULT IN HARASSMENT, THROUGH THE BIRD FLUSHING OFF THE NEST OR PREVENTING ADULT BIRDS FROM CARRYING FOOD TO THE NEST, OR OTHERWISE JEOPARDIZE THE SURVIVAL OF THE NEST CONTENTS (EGGS, YOUNG, FLEDGLINGS, ETC.).

MITIGATION MEASURE F: COMPLY WITH THE SECTION 1600 STREAMBED ALTERATION AGREEMENT

BEFORE CONSTRUCTION, OBTAIN A SECTION 1600 STREAMBED ALTERATION AGREEMENT FROM CDFW FOR ANY ACTIVITIES PROPOSED IN OR NEAR THE SIERRA CREEK DRAINAGE THAT WOULD POTENTIALLY ALTER THE BANKS OF SIERRA CREEK AND IMPLEMENT ALL CONDITIONS IN THE PERMIT.

MITIGATION MEASURE G: SUBMIT A TREE PERMIT APPLICATION WITH THE COUNTY OF SACRAMENTO DEPARTMENT OF PUBLIC WORKS

BEFORE CONSTRUCTION, SUBMIT A TREE PERMIT APPLICATION TO THE COUNTY OF SACRAMENTO DEPARTMENT OF PUBLIC WORKS ACCOMPANIED BY THE APPLICATION FEE ESTABLISHED BY THE BOARD OF SUPERVISORS, IN ACCORDANCE WITH SECTION 19.12.180 OF COUNTY CODE. A COPY OF THIS REPORT AND THE FINAL PROJECT SITE PLAN SHOULD ACCOMPANY THE APPLICATION. ONCE REVIEWED BY THE COUNTY, FINAL DETERMINATION OF TREE REPLACEMENT REQUIREMENTS WILL BE PROVIDED.

MITIGATION MEASURE H: PALEONTOLOGICAL RESOURCES UNANTICIPATED DISCOVERY

PRIOR TO THE START OF EARTHMOVING ACTIVITIES AT THE PROJECT SITE, INFORM ALL CONSTRUCTION PERSONNEL INVOLVED WITH EARTHMOVING ACTIVITIES REGARDING THE POSSIBILITY OF ENCOUNTERING FOSSILS, THE APPEARANCE AND TYPES OF FOSSILS LIKELY TO BE SEEN DURING CONSTRUCTION, AND PROPER NOTIFICATION PROCEDURES SHOULD FOSSILS BE ENCOUNTERED. THIS WORKER TRAINING MAY EITHER BE PREPARED AND PRESENTED BY AN EXPERIENCED FIELD ARCHAEOLOGIST AT THE SAME TIME AS CONSTRUCTION WORKER EDUCATION ON CULTURAL RESOURCES OR PREPARED AND PRESENTED SEPARATELY BY A QUALIFIED PALEONTOLOGIST.
IF PALEONTOLOGICAL RESOURCES ARE DISCOVERED DURING EARTHMOVING ACTIVITIES, IMMEDIATELY CEASE WORK IN THE VICINITY OF THE FIND AND NOTIFY THE COUNTY. THE SACRAMENTO COUNTY OFFICE OF PLANNING AND ENVIRONMENTAL REVIEW WILL ALSO BE NOTIFIED. NHRPD WILL RETAIN A QUALIFIED PALEONTOLOGIST TO EVALUATE THE RESOURCE AND PREPARE A RECOVERY PLAN BASED ON SOCIETY OF VERTEBRATE PALEONTOLOGY (SVP) GUIDELINES (SVP 1996). THE RECOVERY PLAN MAY INCLUDE, BUT IS LIMITED TO, A FIELD SURVEY, CONSTRUCTION MONITORING, SAMPLING AND DATA RECOVERY PROCEDURES, MUSEUM CURATION AND FOR ANY SPECIMEN RECOVERED, AND A REPORT OF FINDINGS. RECOMMENDATIONS IN THE RECOVERY PLAN THAT ARE DETERMINED BY NHRPD, AS THE CEQA LEAD AGENCY, TO BE NECESSARY AND FEASIBLE WILL BE IMPLEMENTED BEFORE CONSTRUCTION ACTIVITIES CAN RESUME AT THE SITE WHERE THE PALEONTOLOGICAL RESOURCES WERE DISCOVERED.

MITIGATION MEASURE I: CULTURAL RESOURCES UNANTICIPATED DISCOVERY

IF HUMAN REMAINS ARE DISCOVERED DURING ANY GROUND DISTURBING/CONSTRUCTION ACTIVITIES DURING PROJECT IMPLEMENTATION, WORK WILL BE HALTED AND THE COUNTY CORONER CONTACTED. FOR ALL OTHER UNEXPECTED CULTURAL RESOURCES DISCOVERED DURING PROJECT CONSTRUCTION, WORK WILL BE HALTED UNTIL A QUALIFIED ARCHAEOLOGIST MAY EVALUATE THE RESOURCE ENCOUNTERED.

1. PURSUANT TO SECTIONS 5097.97 AND 5097.98 OF THE STATE HEALTH AND SAFETY CODE, IF A HUMAN BONE OR BONE OF UNKNOWN ORIGIN IS FOUND DURING CONSTRUCTION, ALL WORK IS TO STOP AND THE COUNTY CORONER AND THE OFFICE OF PLANNING AND ENVIRONMENTAL REVIEW WILL BE IMMEDIATELY NOTIFIED. ID THE REMAINS ARE DETERMINED TO BE NATIVE AMERICAN, THE CORONER WILL NOTIFY THE NATIVE AMERICAN HERITAGE COMMISSION (NAHC) WITHIN 24 HOURS, AND THE NAHC WILL IDENTIFY THE PERSON OR PERSONS IT BELIEVES TO BE THE MOST LIKELY DESCENDENT (MLD) FROM THE DECEASED NATIVE AMERICAN. THE MOST LIKELY DESCENDENT MAY MAKE RECOMMENDATIONS TO THE LANDOWNER OR THE PERSON RESPONSIBLE FOR THE EXCAVATION WORK, FOR MEANS OF TREATING OR DISPOSITION OF, WITH APPROPRIATE DIGNITY, THE HUMAN REMAINS AND ANY ASSOCIATED GRAVE GOODS.
2. IN THE EVENT OF AN INADVERTENT DISCOVERY OF CULTURAL RESOURCES (EXCLUDING HUMAN REMAINS) DURING CONSTRUCTION, ALL WORK MUST HALT WITHIN A 150-FOOT RADIUS OF THE DISCOVERY. A QUALIFIED PROFESSIONAL ARCHAEOLOGIST, MEETING THE SECRETARY OF THE INTERIOR'S PROFESSIONAL QUALIFICATION STANDARDS FOR PREHISTORIC AND HISTORIC ARCHAEOLOGY, WILL BE RETAINED AT THE APPLICANT'S EXPENSE TO EVALUATE THE SIGNIFICANCE OF THE FIND. IF IT IS DETERMINED DUE TO THE TYPES OF DEPOSITS DISCOVERED THAT A NATIVE AMERICAN MONITOR IS REQUIRED, THE GUIDELINES FOR MONITORS/CONSULTANTS OF NATIVE AMERICAN CULTURAL, RELIGIOUS, AND BURIAL SITES AS ESTABLISHED BY THE NATIVE AMERICAN HERITAGE COMMISSION WILL BE FOLLOWED, AND THE MONITOR WILL BE RETAINED AT THE APPLICANT'S EXPENSE.

A. WORK CANNOT CONTINUE WITHIN THE 150-FOOT RADIUS OF THE DISCOVERY SITE UNTIL THE ARCHAEOLOGIST AND/OR TRIBAL MONITOR CONDUCTS SUFFICIENT RESEARCH AND DTA COLLECTION TO MAKE A DETERMINATION THAT THE RESOURCE IS EITHER 1) NOT CULTURAL IN ORIGIN; OR 2) NOT POTENTIALLY ELIGIBLE FOR LISTING ON THE NATIONAL REGISTER OF HISTORIC PLACES OR CALIFORNIA REGISTER OF HISTORICAL RESOURCES.

B. IF A POTENTIALLY-ELIGIBLE RESOURCE IS ENCOUNTERED, THEN THE ARCHAEOLOGIST AND/OR TRIBAL MONITOR, THE PLANNING AND ENVIRONMENTAL REVIEW DIVISION STAFF, AND THE PROJECT PROPONENT WILL ARRANGE FOR EITHER 1)TOT AVOIDANCE OF THE RESOURCE, IF POSSIBLE, OR 2) TEST EXCAVATIONS OR TOTAL DATA RECOVERY AS MITIGATION. THE DETERMINATION WILL BE FORMALLY DOCUMENTED IN WRITING AND SUBMITTED TO THE COUNTY ENVIRONMENTAL COORDINATOR AS VERIFICATION THAT THE PROVISIONS OF CEQA FOR MANAGING UNANTICIPATED DISCOVERIES HAVE BEEN MET.

ABBREVIATIONS

BC	BOTTOM OF CURB	INV	INVERT ELEVATION
BW	BOTTOM OF WALL	MAX	MAXIMUM
BOW	BACK OF WALL	ME	MECHANICAL ENGINEER
CJ	TOOLED CONTROL JOINT	MIN	MINIMUM
CL	CENTERLINE	(N)	NEW
CLR	CLEAR	OC	ON CENTER
CIP	CAST IN PLACE	PA	PLANTING AREA
CMU	CONCRETE MASONRY UNIT	PIP	POURED IN PLACE CONCRETE
C	CONCRETE	POB	POINT OF BEGINNING
DG	DECOMPOSED GRANITE	R	RADIUS
DWGS	DRAWINGS	RIM	RIM ELEVATION
(E) OR EX	EXISTING	RP	RADIUS POINT
EJ	EXPANSION JOINT	SAD	SEE ARCHITECTURAL DRAWINGS
EQ	EQUAL	SCD	SEE CIVIL DRAWINGS
FC	FACE OF CURB	SED	SEE ELECTRICAL DRAWINGS
FDE	FINISH DECK ELEVATIONS	SIM	SIMILAR
FF/FFE	FINISH FLOOR ELEVATION	SLD	SEE LANDSCAPE DRAWINGS
FG	FINISH GRADE	SP	SPACE
FL	FLOW LINE	TBD	TO BE DETERMINED
FOB	FACE OF BUILDING	TC	TOP OF CURB
FOW	FACE OF WALL	TP	TOP OF PAVEMENT
FS	FINISH SURFACE	TW	TOP OF WALL
FV	FIELD VERIFY	TYP	TYPICAL
HP	HIGH POINT		

GENERAL NOTES: CALIFORNIA AMERICAN WATER

1. ALL WATER IMPROVEMENTS SHALL BE CONSTRUCTED IN ACCORDANCE WITH THE MOST CURRENT CALIFORNIA AMERICAN WATER COMPANY (CAL-AM) STANDARD SPECIFICATIONS AND DETAILS, AND AMERICAN WATER WORKS ASSOCIATION (AWWA) STANDARDS. THE CONTRACTOR HAVE A CURRENT COPY OF CAL-AM STANDARD SPECIFICATIONS AND DETAILS AT THE JOB SITE AT ALL TIMES.
2. CAL-AM APPROVAL OF THE DRAWINGS DOES NOT CONSTITUTE A COMMITMENT FOR SERVICE OR AN AUTHORIZATION TO START CONSTRUCTION THE APPLICANT/CONTRACTOR SHALL OBTAIN ALL NECESSARY PERMITS FROM ANY FEDERAL, STATE, AND/OR LOCAL PERMIT AUTHORITY H JURISDICTION OVER ANY PHASE OF CONSTRUCTION ASSOCIATED WITH THE INSTALLATION OF THE WATER SYSTEM.
3. CAL-AM IS ONLY RESPONSIBLE FOR MARKING EXISTING WATER FACILITIES OWNED BY CAL-AM AND SHALL NOT BE RESPONSIBLE FOR MAR OTHER FACILITIES INCLUDING THOSE NEWLY INSTALLED BUT NOT YET ACCEPTED BY, AND CONVEYED TO, CAL-AM. THE APPLICANT/CONTRACTOR IS RESPONSIBLE FOR MARKING NEW FACILITIES UNTIL CAL-AM ACCEPTS OWNERSHIP. ANY AND ALL DAMAGE TO WATER FACILITIES TO BE BY CAL-AM MUST BE REPORTED TO CAL-AM IMMEDIATELY AND CAL-AM MUST BE ALLOWED TO INSPECT AND APPROVE REPAIRS OR REPLACEMENTS. ANY UNMARKED OR INACCURATE MARKINGS OF OTHER UTILITIES ARE NOT THE RESPONSIBILITY OF CAL-AM.
4. THE APPLICANT/CONTRACTOR SHALL TAKE VIDEO AND PHOTOS TO DOCUMENT EXISTING FIELD CONDITIONS AND SUBMIT TO CAL-AM PRIOR START OF CONSTRUCTION.
5. THE APPLICANT/CONTRACTOR SHALL HAVE CURB AND GUTTER INSTALLED OR STAKED PRIOR TO START OF CONSTRUCTION OF WATER MA HYDRANTS, SERVICES, ETC.
6. THE APPLICANT/CONTRACTOR SHALL MAKE SUBGRADE PRIOR TO START OF CONSTRUCTION OF WATER MAIN, FIRE HYDRANTS, SERVICES.
7. THE APPLICANT/CONTRACTOR IS REQUIRED TO SUBMIT MATERIALS TO CAL-AM FOR APPROVAL PRIOR TO CONSTRUCTION. THE APPLICANT/CONTRACTOR SHALL SCHEDULE AND ATTEND AN ON-SITE PRE-CONSTRUCTION MEETING A MINIMUM OF FIVE (5) BUSINESS DAY PRIOR TO CONSTRUCTION.
8. THE APPLICANT/CONTRACTOR SHALL NOTIFY CAL-AM FIVE (5) BUSINESS DAYS PRIOR TO ANY CONSTRUCTION. THE CONTRACTOR SHALL 1 UNDERGROUND SERVICE ALERT (USA) A MINIMUM OF 48 HOURS PRIOR TO ANY CONSTRUCTION.
9. THE APPLICANT/CONTRACTOR SHALL HAVE ALL PERMITS PRIOR TO START OF CONSTRUCTION, INCLUDING BUT NOT LIMITED TO LOCAL, CIT COUNTY, AND DIVISION OF DRINKING WATER (DDW).
10. SEPARATION REQUIREMENTS FOR WATER MAINS SHALL BE IN COMPLIANCE WITH TITLE 22, OTHERWISE A VARIANCE FROM CALIFORNIA DIV OF DRINKING WATER (DDW) MUST COORDINATED THROUGH CAL-AM. DDW APPROVAL SHALL BE OBTAINED PRIOR TO START OF CONSTRUCTION.
11. THE APPLICANT/CONTRACTOR SHALL CONDUCT THEIR OPERATIONS SO THAT ALL EMPLOYEES ARE PROVIDED A SAFE PLACE TO WORK AN THE PUBLIC IS PROTECTED. THE CONTRACTOR SHALL COMPLY WITH THE OCCUPATIONAL SAFETY AND HEALTH REGULATIONS OF THE U.S. DEPARTMENT OF LABOR AND THE STATE OF CALIFORNIA DEPARTMENT OF INDUSTRIAL RELATIONS.
12. CAL-AM CANNOT GUARANTEE A COMPLETE SHUT-DOWN OF EXISTING WATER MAINS BECAUSE OF THE AGE AND CONDITION OF EXISTING CAL-AM WILL ATTEMPT TO SHUT DOWN MAINS AS COMPLETELY AS POSSIBLE; HOWEVER, THE APPLICANT/CONTRACTOR SHALL BE RESPOND FOR DE-WATERING AND ISOLATION OF CONSTRUCTION FOR TESTING PURPOSES AT THE APPLICANT/CONTRACTOR'S EXPENSE.
13. THE APPLICANT/CONTRACTOR SHALL REQUEST TO SCHEDULE A SHUTDOWN THROUGH CAL-AM'S INSPECTOR A MINIMUM OF FIVE (5) BUSINESS DAYS PRIOR TO THAT SCHEDULED SHUT-DOWN. SHUT DOWN TIME SHALL NOT EXCEED FOUR (4) HOURS WITHOUT SPECIAL CAL-AM APPROVAL.
14. ACTUAL FIELD CONDITIONS MAY VARY FROM THOSE SHOWN ON THE DRAWINGS AND CAL-AM ASSUMES NO RESPONSIBILITY FOR THE COMPLETENESS OR ACCURACY OF THE DRAWINGS. THE APPLICANT/CONTRACTOR SHALL POTHOLE ALL UTILITY CROSSINGS PRIOR TO CONSTRUCTION AT THE CONTRACTORS EXPENSE. THE CONTRACTOR SHALL FIELD VERIFY THE EXACT LOCATION, SIZE, DEPTH, MATERIAL, TYPE OF ALL EXISTING UTILITIES AND INTERFERENCES WITHIN THE PROPOSED CONSTRUCTION AREA PRIOR TO EXCAVATION, FABRICATIO INSTALLATION. THE CONTRACTOR SHALL PROTECT ALL IMPROVEMENTS AND UNDERGROUND UTILITIES. THE CONTRACTOR SHALL NOTIFY OF ANY CONFLICTS AND RECEIVE AUTHORIZATION PRIOR TO CONTINUING WORK.
15. THE APPLICANT/CONTRACTOR SHALL PROTECT ALL EXISTING UTILITIES (I.E. ELECTRICAL, TELEPHONE, WATER, SEWER, STORM, GAS, OIL, OPTIC, IRRIGATION, AND MANHOLES, ETC.) IN PLACE.
16. ALL TRAFFIC CONTROL SHALL BE IN ACCORDANCE WITH THE LATEST PUBLICATION "STATE OF CALIFORNIA MANUAL OF TRAFFIC CONTROL CONSTRUCTION AND MAINTENANCE WORK ZONES". FLAGGERS SHALL BE STATE CERTIFIED, WHEN REQUIRED.
17. THE APPLICANT/CONTRACTOR SHALL RESTORE OR REPLACE IN KIND ALL EXISTING IMPROVEMENTS DISTURBED DURING CONSTRUCTION.
18. AT THE END OF EACH WORKING DAY AND AT THE TIMES WHEN CONSTRUCTION OPERATION IS SUSPENDED FOR ANY REASONS, THE CONTRACTOR SHALL REMOVE ALL EQUIPMENT, VEHICLES, MATERIALS, TRAFFIC CONTROL DEVICES, STOCKPILE OR ANY OTHER FORM OF OBSTRUCTION THE STREET RIGHT-OF-WAY. THE CONTRACTOR SHALL EITHER BACKFILL AND PLACE BASE PAVEMENT OR THE TRENCH SHALL HAVE HYDR SHORING AND PLYWOOD BACKING WITH RECESSED NON-SKID STEEL PLATES. WHEN MORE THAN ONE STEEL PLACE IS USED, EACH PLATE HAVE THREE 3-INCH TACK WELDS AND CORNERS PINNED.
19. THE APPLICANT/CONTRACTOR SHALL MAINTAIN ACCESS TO DRIVEWAYS AT ALL TIMES.
20. THE APPLICANT/CONTRACTOR IS RESPONSIBLE FOR ALL REQUIRED SURVEYING AND STAKING, SHOWING THE LOCATION AND GRADES FOR INSTALLING THE WATER SYSTEM. THE APPLICANT/CONTRACTOR IS RESPONSIBLE FOR PROTECTING AND MAINTAINING ALL SURVEY MONUMENTS AND STAKING WHETHER EXISTING OR DISCOVERED DURING CONSTRUCTION.
21. THE APPLICANT/CONTRACTOR IS RESPONSIBLE TO HIRE A THIRD PARTY STATE CERTIFIED INDEPENDENT SOILS TESTING SERVICE TO PRO BACKFILL MATERIAL INSPECTION AND COMPACTION TESTING. COMPACTION TESTS DOCUMENTING COMPLIANCE WITH MINIMUM COMPACT REQUIREMENTS WILL BE TAKEN AT 50-FT INTERVALS OR PER THE MINIMUM LOCAL AGENCY REQUIREMENTS, WHICHEVER IS MORE FREQUENT ALL TESTING REPORTS SHALL BE SUBMITTED TO CAL-AM FOR REVIEW AND APPROVAL WITHIN 24 HOURS. TESTING RESULTS FROM A CERT COUNTY OR CITY REPRESENTATIVE IS PERMITTED WHERE JURISDICTIONAL REQUIREMENTS PROVIDE SUCH COMPACTION TESTING.
22. REDUCED PRESSURE BACKFLOW PREVENTION DEVICES ARE REQUIRED ON ALL COMMERCIAL, NON-SINGLE FAMILY HOMES, SINGLE FAMILY HOMES WITH GROUNDWATER WELL, WHERE A OR A PUMPING / PRESSURIZED SYSTEM EXISTS., OR WHERE A PASSIVE PURGE FIRE SUPPRESSION SYSTEM IS NOT IN USE. THE APPLICANT/CONTRACTOR SHALL BE RESPONSIBLE FOR OWNERSHIP AND MAINTENANCE OF BACKFLOW PREVENTION DEVICES.
23. ALL PUBLIC FIRE HYDRANTS SHALL BE PAINTED WHITE. PRIVATE FIRE HYDRANTS SHALL BE PAINTED RED UNLESS DIRECTED OTHERWISE LOCAL FIRE DISTRICT. ALL FIRE HYDRANTS SHALL BE COATED WITH AN APPROVED EPOXY PAINT IN ACCORDANCE WITH THE COATING MANUFACTURER'S SPECIFICATIONS. FIRE HYDRANT BASE FLANGE TO BE A MINIMUM OF 2-INCHES AND A MAXIMUM OF 4-INCHES ABOVE FIN GRADE. BREAKAWAY CHECK VALVES SHALL BE REQUIRED ON ALL HYDRANTS.
24. FIRE HYDRANTS SHALL BE LOCATED 2-FOOT MINIMUM OUTSIDE OF CURB RADIUS AND 2-FOOT MINIMUM OUTSIDE OF ACCESSIBLE RAMPS AN WITH THE LOCAL FIRE DEPAR

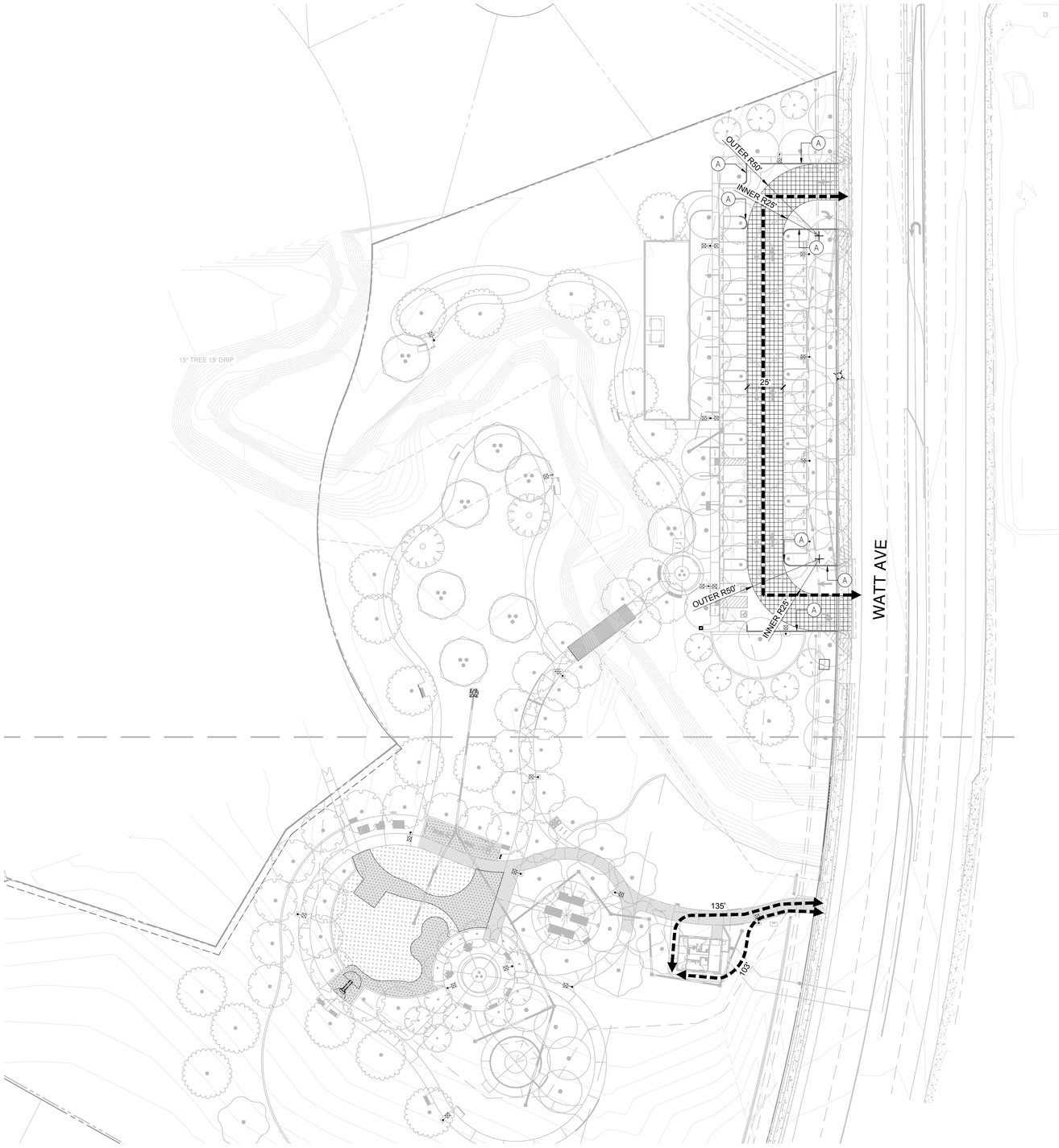

LEGEND

FIRE ACCESS LANE

PATH OF TRAVEL

(A) RED CURB PAINT "FIRE LANE NO PARKING" IN 4" TALL WHITE LETTERS TO BE PAINTED ON THE SIDE OF ALL ON-SITE RED CURB

NOTES:

A. FIRE LANES SHALL BE A MINIMUM OF 20 FEET CLEAR WIDTH AND 13 1/2 FEET CLEAR HEIGHT. (CFC 503.2.1)

B. ALL TREES WITHIN THE FIRE LANE TO HAVE CANOPIES TRIMMED TO 14' ABOVE FINISHED GRADE.

SACRAMENTO METRO FIRE DISTRICT	
APPROVED AS TO FIRE SERVICE LOCATIONS ONLY. MAIN SIZE DETERMINED BY SACRAMENTO SUBURBAN WATER DISTRICT.	
BY:	DATE:

N

0 20 40 80

SCALE: 1" = 40'

Know what's **below.** **Call** before you dig.

Westwood

Westwood Professional Services, Inc.
6200 STONERIDGE MALL ROAD, SUITE 330
PLEASANTON, CA 94588
T: 925.223.8340
www.wsp-pa.com

NO.	DESCRIPTION	DATE	BY	APP. DATE	APP.

ANTELOPE, CALIFORNIA

NHRPD SIERRA CREEK PARK

7781 WATT AVE
FIRE ACCESS PLAN

DATE: 08/31/26

DRAFTER: TH, AL, CY

DESIGNER: KF, TH

CHECKED: KF, JG

PROJECT NO.
41541

REGISTERED PROFESSIONAL ENGINEER
ROBERT T CHEW
59425
CIVIL
STATE OF CALIFORNIA

G0.1

Last Saved by: ALlico
Plot Date/Time: 8/31/2026 1:57 PM
Drawing: N:_CIDE\Pleasanton\41541 NRHPD Sierra Creek Park\Landscape\ConsPlans\41541-FIRE ACCESS PLAN

GENERAL NOTES

1. THESE PLANS SHOW EXISTING FEATURES INCLUDING BUT NOT LIMITED TO TREES, UTILITIES, AND STRUCTURES THAT MAY BE AFFECTED BY THE CONSTRUCTION OR PLACEMENT OF THE PROPOSED ENGINEERED IMPROVEMENTS SHOWN ON THESE PLANS. THE CONTRACTOR SHALL BE RESPONSIBLE TO IMMEDIATELY NOTIFY THE ENGINEER IF THERE ARE ANY EXISTING FEATURES, WHETHER SHOWN OR NOT SHOWN ON THESE PLANS, THAT COULD IN ANY WAY BE IN POTENTIAL CONFLICT WITH THE DESIGN ON THESE PLANS. ALL WORK WITHIN THE VICINITY OF A POTENTIAL CONFLICT SHALL CEASE UNTIL AN ADEQUATE AND APPROPRIATE SOLUTION IS DETERMINED BY THE ENGINEER AND APPROVED BY THE PUBLIC WORKS DEPARTMENT.
2. THE ENGINEER ASSUMES NO RESPONSIBILITY BEYOND THE ADEQUACY OF HIS DESIGN CONTAINED HEREIN.
3. CONSTRUCTION CONTRACTOR AGREES THAT IN ACCORDANCE WITH GENERALLY ACCEPTED CONSTRUCTION PRACTICES, CONSTRUCTION CONTRACTOR WILL BE REQUIRED TO ASSUME SOLE AND COMPLETE RESPONSIBILITY FOR JOB SITE CONDITIONS DURING THE COURSE OF CONSTRUCTION OF THE PROJECT, INCLUDING SAFETY OF ALL PERSONS AND PROPERTY; THAT THIS REQUIREMENT SHALL BE MADE TO APPLY CONTINUOUSLY AND NOT BE LIMITED TO NORMAL WORKING HOURS, AND CONSTRUCTION CONTRACTOR FURTHER AGREES TO DEFEND, INDEMNIFY AND HOLD DESIGN PROFESSIONAL HARMLESS FROM ANY AND ALL LIABILITY, REAL OR ALLEGED, IN CONNECTION WITH THE PERFORMANCE OF WORK ON THIS PROJECT, EXCEPTING LIABILITY ARISING FROM THE SOLE NEGLIGENCE OF DESIGN PROFESSIONAL.
4. EXCAVATIONS SHALL BE ADEQUATELY SHORED, BRACED AND SHEETED SO THAT THE EARTH WILL NOT SLIDE OR SETTLE AND SO THAT ALL EXISTING IMPROVEMENTS OF ANY KIND WILL BE FULLY PROTECTED FROM DAMAGE. ANY DAMAGE RESULTING FROM LACK OF ADEQUATE SHORING, BRACING AND SHEETING, SHALL BE THE RESPONSIBILITY OF THE CONTRACTOR AND HE SHALL EFFECT NECESSARY REPAIRS OR RECONSTRUCTION AT HIS OWN EXPENSE. WHERE THE EXCAVATION FOR A CONDUIT TRENCH, STRUCTURE AND/OR BORING OR JACKING PIT IS REQUIRED THE CONTRACTOR SHALL CONFORM TO THE APPLICABLE CONSTRUCTION SAFETY ORDERS OF THE DIVISION OF INDUSTRIAL SAFETY OF THE STATE OF CALIFORNIA. THE CONTRACTOR SHALL ALWAYS COMPLY WITH OSHA REQUIREMENTS.
5. THE CONTRACTOR SHALL COMPLY WITH THE RULES AND REGULATIONS OF THE STATE CONSTRUCTION SAFETY ORDER.
6. THE CONTRACTOR'S ATTENTION IS DIRECTED TO THE REQUIREMENTS OF THE DIVISION OF INDUSTRIAL SAFETY PERTAINING TO "CONFINED SPACES." ANY MANHOLE, CULVERT, DROP INLET OR TRENCH (WHICH COULD CONTAIN AIR), THAT IS NOT READILY VENTILATED, MAY BE CONSIDERED A "CONFINED SPACE."
7. CONTRACTOR SHALL POST EMERGENCY TELEPHONE NUMBERS FOR AMBULANCE, POLICE AND FIRE DEPARTMENTS.
8. THE CONTRACTOR SHALL PROVIDE ALL LIGHTS, SIGNS, BARRICADES, FLAGMEN, OR OTHER DEVICES NECESSARY TO PROVIDE FOR PUBLIC SAFETY AND TO MAINTAIN TRAFFIC CONTROL AT ALL TIMES.
9. THE CONTRACTOR SHALL PROVIDE FOR INGRESS AND EGRESS FOR ANY PRIVATE PROPERTY ADJACENT TO THE WORK AREA THROUGHOUT THE PERIOD OF CONSTRUCTION.
10. FOR ALL WORK WITHIN PUBLIC RIGHT-OF-WAYS, THE CONTRACTOR SHALL OBTAIN A NO FEE ENCROACHMENT PERMIT AND SHALL PRESERVE THE INTEGRITY AND LOCATION OF ANY AND ALL PUBLIC UTILITIES, STREET IMPROVEMENTS AND PROVIDE NECESSARY CONSTRUCTION TRAFFIC CONTROL. THE CONTRACTOR SHALL, THROUGH THE ENCROACHMENT PERMIT PROCESS, VERIFY WITH THE #### THE NEED FOR ANY DETOUR PLAN. IF A PLAN IS REQUIRED, CONTRACTOR SHALL PROVIDE PLAN AND RECEIVE APPROVAL PRIOR TO CONSTRUCTION.
11. THE OWNER'S ENGINEER WILL PROVIDE THE CONSTRUCTION STAKES. THE NUMBER AND LOCATION OF STAKES REQUIRED SHALL BE DETERMINED BEFORE THE CONSTRUCTION BEGINS. ALL STAKING REQUESTS SHALL BE DIRECTED TO THE ENGINEER A MINIMUM OF 48 HOURS PRIOR TO ACTUAL NEED. ANY ADDITIONAL STAKING OR RESTAKING WILL ONLY BE DONE AS DIRECTED AND AUTHORIZED BY THE OWNER OR HIS AUTHORIZED AGENT. THE CITY ENGINEER HAS THE AUTHORITY TO REQUIRE THE OWNER OR HIS AUTHORIZED AGENT TO PLACE ADDITIONAL STAKES OR RESTAKES AS HE DEEMS NECESSARY FOR PROPER CONSTRUCTION OR TO AVOID CONFLICTS. ALL CONSTRUCTION STAKING SHALL BE DONE BY A REGISTERED CIVIL ENGINEER OR LICENSED LAND SURVEYOR. CONTRACTOR SHALL SCHEDULE HIS EFFORTS TO ALLOW TIME AFTER THE FIELD CREW ARRIVES AT THE SITE FOR THE STAKING NEEDS TO BE ADEQUATELY FULFILLED PRIOR TO THE START OF CONSTRUCTION.
12. ALL EXISTING ELEVATIONS SHOWN ARE AS MEASURED IN THE FIELD UNLESS OTHERWISE NOTED.
13. ENGINEER ASSUMES NO RESPONSIBILITY FOR FINAL GRADE OF CONCRETE UNLESS FORMS ARE CHECKED BY ENGINEER PRIOR TO POURING.
14. OBSTRUCTIONS INDICATED ARE FOR INFORMATION ONLY. IT IS THE CONTRACTOR'S RESPONSIBILITY TO VERIFY THE LOCATION AND DEPTH WITH THE APPROPRIATE AGENCIES. THE CONTRACTOR SHALL NOTIFY USA (UNDERGROUND SERVICE ALERT) FOR THE UTILITY LOCATIONS PRIOR TO ANY CONSTRUCTION OR POTHOLING (1-800-227-2600). NEITHER THE OWNER NOR THE ENGINEER ASSUMES RESPONSIBILITY THAT THE OBSTRUCTIONS INDICATED WILL BE THE OBSTRUCTIONS ENCOUNTERED.
15. IT SHALL BE THE CONTRACTOR'S RESPONSIBILITY TO NOTIFY THE ENGINEER OF ANY DIFFERENCES IN LOCATIONS OF EXISTING UTILITIES SHOWN, OR ANY CONFLICTS WITH THE DESIGN, BEFORE CONTINUING WITH WORK IN THAT AREA.
16. THE CONTRACTOR SHALL COORDINATE SANITARY SEWER, STORM DRAIN AND WATER CONSTRUCTION IN A MANNER TO PREVENT ANY CONFLICTS WHERE UTILITY LINES CROSS EACH OTHER.
17. MANHOLE, VALVE AND METER BOX, RIM ELEVATIONS IF SHOWN ARE APPROXIMATE ONLY. THE CONTRACTOR SHALL BE RESPONSIBLE FOR ADJUSTING THE RIMS AND COVERS TO THE FINISHED PAVEMENT GRADE.

SACRAMENTO COUNTY NOTES

1. ALL CONSTRUCTION AND MATERIALS SHALL BE IN ACCORDANCE WITH THE COUNTY OF SACRAMENTO STANDARD CONSTRUCTION SPECIFICATIONS AND IMPROVEMENT STANDARDS. WHERE INCONSISTENCIES EXIST, THE LATEST EDITION SHALL TAKE PRECEDENCE.
2. PUBLIC CONVENIENCE, PUBLIC SAFETY AND TRAFFIC CONTROL SHALL BE PROVIDED IN ACCORDANCE WITH SECTIONS 12-2 AND 12-3 OF THE STANDARD CONSTRUCTION SPECIFICATIONS AND AS DIRECTED BY THE COUNTY INSPECTOR. SAFE VEHICULAR AND PEDESTRIAN ACCESS SHALL BE PROVIDED AT ALL TIMES DURING CONSTRUCTION.
3. THE CONSULTANT ENGINEER SHALL NOTIFY THE COUNTY OF SACRAMENTO CONSTRUCTION OFFICE [PHONE: (916) 875-2700] UPON COMPLETION OF STAKING.
4. THE CONTRACTOR SHALL NOTIFY THE COUNTY OF SACRAMENTO CONSTRUCTION INSPECTION OFFICE TWO (2) WORKING DAYS PRIOR TO THE INTENTION TO COMMENCE WORK. THE CONTRACTOR SHALL NOT START ANY GRADING UNTIL THE COUNTY COMPLETES A PRE-CONSTRUCTION MEETING [(916) 875-2700].
5. THE COUNTY OF SACRAMENTO IS A MEMBER OF THE UNDERGROUND SERVICE ALERT (USA) ONE CALL PROGRAM. THE CONTRACTOR OR ANY SUBCONTRACTOR FOR THIS CONTRACT SHALL NOTIFY MEMBERS OF USA TWO (2) WORKING DAYS IN ADVANCE OF PERFORMING ANY EXCAVATION WORK BY CALLING THE TOLL-FREE NUMBER: 1(800) 227-2600.
THOMAS BROTHERS MAP PAGE __ INDEX __.
6. THE CONTRACTOR SHALL BE RESPONSIBLE FOR THE PROTECTION OF ALL EXISTING SURVEY MONUMENTS OR MARKERS. MONUMENTS OR MARKERS DESTROYED DURING CONSTRUCTION SHALL BE REPLACED AT THE CONTRACTOR'S EXPENSE.
7. ALL SERVICE SEWERS SHALL HAVE FOUR (4) TO FIVE (5) FEET OF COVER AT THE PROPERTY LINE OR RIGHT-OF-WAY, UNLESS OTHERWISE NOTED ON PLANS.
8. EROSION CONTROL MEASURES SHALL BE IN ACCORDANCE WITH SECTION 11 OF THE COUNTY OF SACRAMENTO IMPROVEMENT STANDARDS.
9. THE CONTRACTOR SHALL NOTIFY THE COUNTY INSPECTOR IF EXCESS SOIL IS DISPOSED OFF-SITE. THE DISPOSAL OF EXCESS SOIL SHALL NOT COMMENCE UNTIL THE COUNTY INSPECTOR HAS VERIFIED THAT THE EXPORT SITE IS NOT SUBJECT TO THE COUNTY GRADING ORDINANCE NOR THE FLOODPLAIN ORDINANCE.
10. ALL TRENCH RESTORATION SHALL COMPLY WITH SECTION 14 "RESTORATION OF SURFACES" OF THE SACRAMENTO COUNTY STANDARD CONSTRUCTION SPECIFICATIONS.
11. CMID INSPECTOR SHALL FIELD MARK ANY DEFECTIVE PUBLIC CURBS, GUTTERS, SIDEWALKS, OR DRIVEWAYS (UNEVEN, BROKEN, PROJECTING, OR DETERIORATING), NOT SPECIFICALLY IDENTIFIED ON THE IMPROVEMENT PLANS, FOR REPAIR AND/OR REPLACEMENT DURING THE TIME OF CONSTRUCTION AS NECESSARY FOR PUBLIC HEALTH AND SAFETY. REMOVAL AND REPLACEMENT ARE REQUIRED IF THE VERTICAL CHANGE EXCEEDS ONE-HALF INCH OR IF ANY CRACKS EXCEED ONE-QUARTER INCH IN WIDTH. MODIFICATION (I.E., GRINDING & PATCHING) OF SIDEWALKS IS REQUIRED IF THE VERTICAL CHANGE IN SIDEWALK AREA EXCEEDS ONE-QUARTER INCH BUT LESS THAN ONE-HALF INCH. IN SOME CASES, TREE ROOTS MAY BE ENCOUNTERED WHICH MAY REQUIRE CUTTING TREE ROOTS OR TREE REMOVAL TO DO THE NECESSARY REPAIRS

(PLEASE REFER TO SECTIONS 10-13 AND 15-1 OF THE COUNTY STANDARD CONSTRUCTION SPECIFICATIONS FOR SPECIFIC REQUIREMENTS). A COUNTY TREE PERMIT IS REQUIRED FOR ANY NATIVE OAK TREE ROOT CUTTING WITHIN THE DRIPLINE OF THE TREE. IMPROVEMENTS WILL ONLY BE REQUIRED WITHIN THE PROPERTY LIMITS/BOUNDARY OF THE PROJECT SITE.

12. THE PAY REDUCTION FACTORS NOTED IN SECTION 23-9.02 DO NOT APPLY TO PRIVATELY CONSTRUCTED PROJECT(S). IF THE PERCENT OF THEORETICAL MAXIMUM DENSITY DOES NOT COMPLY WITH THE REQUIREMENTS OF THE STANDARD CONSTRUCTION SPECIFICATIONS, THE CONTRACTOR SHALL REMOVE AND REPLACE THE LIMITS AS FIELD MARKED BY THE CMID INSPECTOR.

ASPHALT CONCRETE NOTES

ANY PAVEMENT WORK WITHIN COUNTY R/W SHALL BE SUBJECT TO SECTION 23 OF THE STANDARD CONSTRUCTION SPECIFICATIONS AS MODIFIED BELOW:

1. TEST METHODS: THE FOLLOWING IS ADDED AFTER THE SECOND PARAGRAPH OF SECTION 23-2.04, "TEST METHODS" OF THE STANDARD CONSTRUCTION SPECIFICATIONS:

   ALL REFERENCES TO AASHTO T 308 IN SECTION 23 MUST BE REPLACED WITH AASHTO T 308 (MODIFIED).

   AASHTO T 308 (MODIFIED) IS AASHTO T 308 WITH THE FOLLOWING PARAMETERS:

   1) BATCH SAMPLES DOWN TO NO.8 SIEVE.
   2) REPLACE NO. 40 SIEVE WITH NO.100 SIEVE.
   3) REPLACE SECTION A2.9.2 WITH: DETERMINE THE AVERAGE DIFFERENCE FOR THE TWO VALUES. THE AGGREGATE CORRECTION FACTORS (EQUAL TO THE RESULTANT AVERAGE DIFFERENCES) FOR ALL SIEVES MUST BE APPLIED TO ALL ACCEPTANCE GRADATION TEST RESULTS DETERMINED BY T 30, PRIOR TO FINAL ROUNDING AND REPORTING.

   ALL REFERENCES TO AASHTO T 27 IN SECTION 23 MUST BE REPLACED WITH AASHTO T 30 AND CALIFORNIA TEST 384 MUST NOT BE USED TO TEST THE COMBINED AGGREGATE GRADATION.

2. GRADATIONS: THE FOLLOWING IS ADDED BEFORE THE FIRST PARAGRAPH OF SECTION 23-3.01.C, "GRADATIONS" OF THE STANDARD CONSTRUCTION SPECIFICATIONS:

   TEST FOR AGGREGATE GRADATION UNDER AASHTO T30.
   CHOOSE A TV WITHIN THE TV LIMITS SHOWN IN THE TABLES TITLED "AGGREGATE GRADATIONS FOR HMA-LG."

   GRADATIONS ARE BASED ON NOMINAL MAXIMUM SIZE AGGREGATE.

3. GRADATIONS: THE FIRST PARAGRAPH OF SECTION 23-5.04.B.2 "GRADATIONS" OF THE STANDARD CONSTRUCTION SPECIFICATIONS IS DELETED.
4. AGGREGATE GRADATIONS: THE FOLLOWING IS ADDED BEFORE THE FIRST PARAGRAPH OF SECTION 23-10.06.C.2, "AGGREGATE GRADATIONS" OF THE STANDARD CONSTRUCTION SPECIFICATIONS:

   TEST FOR AGGREGATE GRADATION UNDER AASHTO T30.

   CHOOSE A TV WITHIN THE TV LIMITS SHOWN IN THE TABLES TITLED "AGGREGATE GRADATIONS FOR RHMA-G." GRADATIONS ARE BASED ON NOMINAL MAXIMUM SIZE AGGREGATE.

SUPPLEMENTAL NOTES

- WHENEVER THE WORK AREA IS ADJACENT TO A TRAFFIC LANE AND THERE IS A CUT, DITCH OR TRENCH MORE THAN TWO (2) INCHES DEEP, THE CONTRACTOR SHALL MAINTAIN CONTINUOUS BARRICADES SPACED AT APPROXIMATELY 20?FOOT INTERVALS FOR THE FIRST 100 FEET FROM THE BEGINNING OF THE CUT, DITCH OR TRENCH, AND APPROXIMATELY 50? FOOT INTERVALS THEREAFTER. IF THE CUT, DITCH OR TRENCH IS MORE THAN TEN (10) FEET FROM A TRAFFIC LANE, THE BARRICADE SPACING SHALL BE GREATER BUT SHALL NOT EXCEED 200 FEET. UNLESS SPECIFICALLY SET FORTH AS SPECIAL PROVISIONS, ALL MARKED LANES OF TRAFFIC SHALL BE UNOBSTRUCTED IN EACH DIRECTION DURING PEAK TRAFFIC HOURS OF 7:00 TO 8:00 AM AND 3:30 TO 6:00 PM. A TRAFFIC LANE SHALL BE CONSIDERED UNOBSTRUCTED IF IT IS SURFACED WITH ASPHALT AND IS AT LEAST TEN (10) FEET WIDE.

(FOR PROJECTS WITH TRENCHING WITHIN THE COUNTY RIGHT-OF-WAY)

- A TRAFFIC CONTROL PLAN SHALL BE PREPARED BY THE CONTRACTOR AND SUBMITTED TO SACRAMENTO COUNTY CONSTRUCTION MANAGEMENT AND INSPECTION DIVISION FOR REVIEW AT LEAST TWENTY (20) DAYS PRIOR TO COMMENCEMENT OF ANY WORK. PLAN APPROVAL MUST FIRST BE OBTAINED PRIOR TO COMMENCEMENT OF ANY WORK WITHIN THE COUNTY RIGHT-OF-WAY.
- EROSION AND SEDIMENT CONTROL MEASURES FOR THIS PROJECT SHALL BE IN SUBSTANTIAL COMPLIANCE WITH THE STORM WATER POLLUTION PREVENTION PLAN (SWPPP) PREPARED FOR THE PROJECT IN ACCORDANCE WITH THE STATE'S GENERAL PERMIT FOR CONSTRUCTION ACTIVITIES. ACCORDING TO STATE LAW, IT IS THE RESPONSIBILITY OF THE PROPERTY OWNER TO MAINTAIN SWPPP UP-TO-DATE TO REFLECT CHANGING CONDITIONS AND ENSURE MOST CURRENT SWPPP IS AVAILABLE ON THE PROJECT SITE AT ALL TIMES FOR REVIEW BY COUNTY AND STATE INSPECTORS.

STREET NOTES

1. SACRAMENTO COUNTY STD DWG 4-31 AND 4-32 IS MODIFIED AS FOLLOWS: REMOVE "REQUIRED ONLY FOR PAVEMENT BETWEEN THREE AND FIVE YEARS OLD". GRINDING SHALL ALWAYS BE REQUIRED REGARDLESS OF THE AGE OF THE PAVEMENT.
2. STREET NAME SIGNS SHALL BE DOUBLE-SIDED WHITE LETTERING ON GREEN BACKGROUND IN ACCORDANCE WITH DETAIL 4-33A AND GENERALLY PLACED IN ACCORDANCE WITH DETAIL 4-37A. TWO REPLACEMENT SETS OF STREET NAME SIGNS ARE REQUIRED. DEVELOPER/CONTRACTOR SHALL SUBMIT PROPOSED STREET NAME SIGNAGE INCLUDING ABBREVIATIONS FOR REVIEW PRIOR TO ORDERING. THE POSTS FOR ALL TRAFFIC AND STREET NAME SIGNS SHALL BE METAL CONFORMING TO CALTRANS SPECIFICATIONS 56-2.02A. TELSPAR BREAKAWAY POSTS WILL BE USED ON MEDIAN SIGNS. STREET NAME SIGNS SHALL BE ATTACHED WITH AN ALUMINUM CROSSPIECE AND U-CHANNEL CAP ON A STEEL POST OR USING AN ALUMINUM CANTILEVERED BRACKET ON STREET LIGHT POLES PER DETAIL 4-33A. DIRECTIONAL AND STREET NAME SIGNS WILL NOT BE PLACED ON THE SAME POSTS AS REGULATORY SIGNS.
3. EXISTING A/C SURFACE SHALL BE CUT TO A NEAT STRAIGHT LINE PARALLEL WITH THE CENTERLINE AND THE EXPOSED EDGE SHALL BE TACKED WITH EMULSION PRIOR TO PAVING THE EXPOSED BASE MATERIAL SHALL BE GRADED, RECOMPACTED AND RESEALED PRIOR TO PAVING. CONTRACTOR SHALL MAINTAIN A CONTINUOUS POUR THROUGH GRADE BREAKS ON CURB, GUTTER AND SIDEWALK SECTIONS AND SHALL LAY ASPHALT CONTINUOUSLY THROUGH GRADE BREAKS. A SLURRY SEAL MAY BE REQUIRED ON FINISHED AND ADJOINING ASPHALT PAVING THE ENTIRE WIDTH OF THE ROADWAY AT THE CITY ENGINEER'S DISCRETION. ALL CURB, GUTTER, DRIVEWAY, AND CURB RAMP REPLACEMENTS SHALL REQUIRE REPLACEMENT OF ADJACENT ASPHALT TO A MINIMUM 2 FEET WIDTH. IF THE IMPROVEMENT PLANS INDICATE ASPHALT OVERLAY OF EXISTING PAVEMENT, THEN OWEN CORNING TRUMBULL TRUPAVE ENGINEERED PAVEMENT MAT OR APPROVED EQUAL SHALL BE PLACED AND INSTALLED CONSISTENT WITH MANUFACTURER'S SPECIFICATIONS.
4. ALL UTILITY CROSSINGS SHALL BE CONSTRUCTED BEFORE PREPARATION OF SUBGRADE AND PLACEMENT OF PAVEMENT. PAVEMENT CUTS WILL NOT BE ALLOWED ONCE THE STREET PAVEMENT HAS BEEN LAID. PRIOR TO CONSTRUCTION OF PAVEMENT SUBGRADE AND SIDEWALKS, SUBMIT IMPROVEMENT PLANS FOR UTILITIES INCLUDING: ELECTRIC, TELEPHONE, CABLE TV, AND GAS FOR REVIEW BY THE CITY ENGINEER.
5. SIDEWALK RAMPS SHALL BE IN COMPLIANCE WITH ALL APPLICABLE ADA STANDARDS, BOTH FEDERAL AND CALIFORNIA CODE TITLE 24. ADJACENT OFF-SITE RAMPS WILL BE UPGRADED TO CURRENT STANDS. NO CONSTRUCTION TOLERANCES WILL BE ALLOWED ON MAXIMUM SLOPES. MAXIMUM CROSS SLOPE ON SIDEWALKS AND SLOPE IN EVERY DIRECTION ON RAMP LANDINGS IS 2%. LANDINGS SHALL DRAIN TO THE GUTTER FLOWLINE. ADJACENT TO THE LANDING, ALONG THE EXTENSION OF THE BACK OF CURB LINE CONSTRUCT A WEAKENED PLANE JOINT IN THE CONCRETE. SEE DETAIL 4-23A.
6. MINIMUM RAMP WIDTH IS 4 FEET. RETAINING CURBS PLACED BEHIND THE LANDINGS SHALL BE A MINIMUM HEIGHT OF 6-INCHES.
7. SACRAMENTO CO STD DWG 4-23-B SIDEWALK RAMP DETAIL SHALL BE USED AT INTERSECTIONS OF ARTERIAL STREETS AND LARGER.
8. DRIVEWAYS IN BARRIER CURBS WILL HAVE A LIP AT THE FLOW LINE OF THE GUTTER OF 1-INCH. THE CROSS-SLOPE IN THE DEPRESSED PORTION OF THE DRIVEWAY SHALL NOT EXCEED 2%.
9. WATER AND SEWER SERVICE LOCATIONS SHALL BE MARKED WITH AN "W" OR "S", AS APPROPRIATE, ON FACE OF CURB, USING ARIAL OR OTHER SIMILAR BLOCK LETTER FONT LETTERS A MINIMUM OF 2.5 INCHES HIGH AND 1/4" DEEP INTO THE CONCRETE. PLACE A BLUE REFLECTOR, ONE (1) FOOT OFF CENTERLINE OF STREETS TOWARDS EACH FIRE HYDRANT, INDICATING FIRE HYDRANT LOCATIONS.
10. RELOCATED POLES FOR VERY HIGH VOLTAGE {69KVA OR GREATER} LINE POWER POLES, WHICH CANNOT FEASIBLY BE PLACED UNDERGROUND, SHALL BE PLACED BEHIND THE BACK OF THE SIDEWALK. STORM DRAIN MANHOLE COVERS WILL BE MARKED "STORM" OR "STORM SEWER". SANITARY SEWER MANHOLE COVERS WILL BE MARKED "SANITARY" OR "SANITARY SEWER". WATER VALVE COVERS SHALL BE MARKED "WATER". SURVEY MONUMENT COVERS SHALL BE MARKED "SURVEY" OR "MONUMENT". ALL DRY UTILITY BOX COVERS SHALL BE LABELED WITH "TELEPHONE", "CABLE", "ELECTRIC", "GAS", ETC.
11. THE STRUCTURAL SECTION FOR ALL SIDEWALKS SHALL BE AT MINIMUM 6-INCHES OF CONCRETE AND 6-INCHES OF AGGREGATE BASE. ALL SUBGRADE UNDER STREETS AND SIDEWALKS SHALL BE SCARIFIED AND RE-COMPACTED TO 90%. ALL AGGREGATE BASE UNDER STREETS AND SIDEWALKS SHALL BE COMPACTED TO 95%.

SACRAMENTO AREA SEWER DISTRICT NOTES (AS OF 8/1/2024)

1. ALL CONSTRUCTION AND MATERIALS USED WITHIN THE PIPE ZONE MUST BE IN ACCORDANCE WITH THE MOST RECENT EDITION OF THE SACRAMENTO AREA SEWER DISTRICT (SACSEWER) STANDARDS AND SPECIFICATIONS (STANDARDS). THE LATEST STANDARDS EDITION AT THE TIME OF PLAN APPROVAL WILL TAKE PRECEDENCE. THE CONTRACTOR MUST USE ALL APPLICABLE ADDENDUMS. INTERMEDIATE BACKFILL, FINAL BACKFILL, AND ALL ROAD SECTIONS MUST BE CONSTRUCTED IN ACCORDANCE WITH THE GOVERNING JURISDICTION'S STANDARD CONSTRUCTION SPECIFICATIONS.
2. THE CONTRACTOR MUST NOTIFY THE SACRAMENTO COUNTY CONSTRUCTION MANAGEMENT AND INSPECTION DIVISION OFFICE AT (916) 875-2700 AT LEAST FIVE WORKING DAYS IN ADVANCE OF BEGINNING WORK.
3. PLANS MUST BE RESUBMITTED FOR APPROVAL IF CONSTRUCTION OF SEWER FACILITIES HAS NOT STARTED WITHIN ONE YEAR FROM THE PLAN APPROVAL DATE.
4. ALL WORK MUST BE INSPECTED BY THE SACSEWER INSPECTOR BEFORE BACKFILLING THE PIPEZONE.
5. DIMENSIONS SHOWN ON PLANS ARE TO THE CENTERLINE OF PIPES AND OR MANHOLES UNLESS OTHERWISE NOTED.
6. FOR THE CURRENT LIST OF SACSEWER APPROVED MANHOLE MANUFACTURES GO TO https://d3mu86i2sz7eca.cloudfront.net/wp-content/uploads/May-2024_approved_mh_manufactures_05232024.pdf OR CALL 916-876-PLAN (7526)
7. TYPE II OR TYPE III BEDDING AND BACKFILL IS REQUIRED UNLESS OTHERWISE NOTED.
8. MAXIMUM STANDARD LENGTH PIPE SECTIONS MUST BE USED EXCEPT WHERE OTHERWISE SPECIFICED ON THE PLANS OR STANDARD DRAWINGS.
9. GRAVITY LOWER LATERALS MUST BE CONSTRUCTED OF ABS SCHEDULE 40, HDPE DR 17, PVC C900 OR SDR 26, OR EXTRA STRENGTH VCP AND BEDDED AND CONSTRUCTED PER STANDARD DRAWINGS P-01 AND LL-01A, RESPECTIVELY. PLANS MUST SPECIFY THE PIPE MATERIAL.
10. CONSTRUCTION OF A CLEANOUT TO GRADE FOR ALL LOWER LATERALS IS REQUIRED PER STANDARD DRAWING LL-02.
11. ANY WATER ENTERING THE SEWER SYSTEM CONSTRUCTED UNDER THESE PLANS MUST NOT BE DISCHARGED TO THE EXISTING SEWER SYSTEM. APPROPRIATE WATERTIGHT PLUGS MUST BE INSTALLED AS NECESSARY. ALL WATER AND DEBRIS IN NEW SYSTEMS MUST BE REMOVED BEFORE FIELD ACCEPTANCE. CARE MUST BE EXERCISED IN PLACING PLUGS TO AVOID INTERRUPTING SERVICE CONNECTIONS. MECHANICAL PLUGS WITH BRICK AND MORTAR MUST BE USED. INFLATABLE PLUGS ARE NOT ALLOWED.
12. SACSEWER REQUIRES TELEVISION INSPECTION OF ALL CONSTRUCTED MAIN LINES IN ACCORDANCE WITH SECTION 331 OF THE STANDARDS. THE SACSEWER INSPECTOR MUST SIGN THE PLANS ON PROVIDED SIGNATURE BLOCK "OK TO SUBMIT FOR GRID NUMBERING" AFTER INSTALLATION OF ALL SEWER FACILITIES BEFORE OBTAINING GRID NUMBERS FOR TELEVISION INSPECTION.
13. FOR THE CURRENT LIST OF SACSEWER APPROVED TV CONTRACTORS GO TO https://d3mu86i2sz7eca.cloudfront.net/wp content/uploads/Approved-TV-Contractors-New-Assets.pdf OR CALL 916-876-PLAN (7526)
14. DEWATERING MUST BE PERFORMED AS NECESSARY TO PROVIDE A STABLE TRENCH BOTTOM FOR PLACEMENT OF SEWER FACILITIES. BEFORE THE CONTRACTOR PLACES MATERIALS IN THE TRENCH, THE BOTTOM OF THE TRENCH MUST BE CERTIFIED BY A GEOTECHNICAL ENGINEER VERIFYING THAT THE TRENCH MEETS THE REQUIREMENTS SPECIFIED IN THE GEOTECHNICAL REPORT. ADDITIONAL REQUIREMENTS FOR UNSTABLE CONDITIONS MUST BE AT THE WRITTEN DIRECTION OF THE PROJECT GEOTECHNICAL ENGINEER OF RECORD AND APPROVED BY SACSEWER. GEOTEXTILE FABRIC IS REQUIRED AS SHOWN AND DETAILED IN STANDARD DRAWING P-01.
15. AT LEAST 72 HOURS BEFORE STARTING CONSTRUCTION, THE CONTRACTOR MUST POTHOLE EXISTING CONNECTION POINTS AND CITIRCAL UTILITY CROSSINGS IF THESE CONNECTION POINTS AND CRITICAL UTILITY CROSSINGS WERE NOT POTHOLED DURING DESIGN. NOTIFY SACSEWER INSPECTOR OF ANY CHANGES FROM THE APPROVED PLANS. CHANGES FROM THE APPROVED PLAN MUST BE SUBMITTED TO AND APPROVED BY SACSEWER AS A PLAN REVISION BEFORE CONSTRUCTION MAY START

WATER SUPPLY NOTES

1. FIRE HYDRANTS SHALL BE CLOW 960 (WET BARREL) OR APPROVED EQUAL WITH WATER CHECK VALVES. FIRE HYDRANT VALVES SHALL BE SPRAYED WITH A RUBBERIZED BASE COATING AND VALVE BONNET BOLTS WILL BE TOP GRADE STEEL. THE FLANGE AT THE BOTTOM OF THE BREAK AWAY SPOOL WILL BE AT GRADE AND THE BOLTS WILL BE PROTECTED FROM THE CONCRETE COLLAR BY LIBERALLY GREASING BOLT SHAFTS IN CONTACT WITH THE CONCRETE. ALL PORTIONS OF THE FIRE HYDRANT, EXCEPT THE BREAK AWAY SPOOL, WILL BE PAINTED "RUSTOLEUM, EQUIPMENT YELLOW #2148", OR "#3445", OR APPROVED EQUAL. HYDRANTS MUST BE INSTALLED AND OPERATIONAL PRIOR TO THE START OF ANY COMBUSTIBLE CONSTRUCTION.
2. DEPTH OF WATER MAINS SHALL BE 3 TO 5 FEET MEASURED FROM THE GUTTER FLOW LINE. INITIAL BEDDING AND BACK-FILL SHALL BE SAND TO 6 INCHES ABOVE TOP OF PIPE. PIPE SECTIONS AND PIPE JOINT DEFLECTION SHALL NT EXCEED MANUFACTURER'S RECOMMENDATIONS. CITY INSPECTOR SHALL BE PRESENT FOR WATER TAPS. ONLY CITY PERSONNEL SHALL OPERATE VALVES ON OPERATIONAL WATER LINES. CONTRACTOR SHALL MAKE SERVICE TAPS UNDER THE DIRECT OBSERVATION OF THE CITY INSPECTOR.
3. ALL VALVES UP TO 12 INCHES IN DIAMETER SHALL BE RESILIENT SEATED GATE VALVES. GATE VALVES SHALL HAVE "TWO WAY" OPERATION FEATURE. ALL VALVES GREATER THAN 12 INCHES AND ABOVE SHALL BE BUTTERFLY VALVES, UNLESS OTHERWISE NOTED. ALL VALVES SHALL BE STANDARD LEFT-HAND OPEN, RIGHT-HAND TURN TO CLOSE. WHERE VALVE NUT IS IN EXCESS OF 10-FEET DEEP, INSTALL A VALVE OPERATING NUT EXTENSION PER COUNTY STD DWG 8-5. EVERY BRANCH OR "LEG" AT CROSS AND TEE CONNECTIONS WILL HAVE A VALVE. ALL VALVE BOXES INSTALLED ON TRANSMISSION AND DISTRIBUTION SYSTEM VALVES SHALL BE TRAFFIC RATED, REGARDLESS OF LOCATION. THOSE VALVE BOXES LOCATED IN NON-PAVEMENT AREAS SHALL HAVE A ONE FOOT WIDE CONCRETE COLLAR CONSTRUCTED AROUND THE BOX, ONE-INCH BELOW GRADE.
4. WATER METER BOXES AND METERS ARE REQUIRED ON ALL SERVICES EXCEPT AS EXEMPTED BY THE CITY ENGINEER. WATER METERS FOR RESIDENTIAL FACILITIES SHALL BE RADIO FREQUENCY READ. METERS FOR NON-RESIDENTIAL FACILITIES SHALL BE RADIO FREQUENCY READ. NEPTUNE BRAND METERS WITH BRASS BASE AS APPROVED BY THE CITY ENGINEER WILL BE INSTALLED. METERS WILL BE CALIBRATED TO READ IN 100 CUBIC FOOT INCREMENTS.
5. SAMPLING STATIONS, ECLIPSE NO. 88, OR APPROVED EQUAL ARE REQUIRED AT LOCATION(S) APPROVED BY THE CITY ENGINEER.
6. METERS 3" AND ABOVE SHALL BE APPROVED COMPOUND TYPE METERS, EXCEPT THAT DEDICATED IRRIGATION ONLY METERS MAY BE APPROVED TURBO TYPE METERS.
7. ALL NON-METALLIC PIPE WATER MAINS AND SERVICE LATERALS SHALL HAVE A LOCATING WIRE. LOCATING WIRE SHALL BE 10-GAUGE SOLID COPPER INSULATED WIRE RUNNING ALONG THE PIPE-S ENTIRETY AND ANCHORED WITH A BOLT/NUT AT THE HYDRANT OR SERVICE BOX.
8. FOR FIRE DEPARTMENT CONNECTIONS, USE REVISED STD DWG 8-7.
9. ALL WATER LINES SHALL BE AWWA C900 PVC UNLESS OTHERWISE SPECIFIED ON THE PLANS.
10. IN CURVED SEGMENTS, JOINT DEFLECTION SHALL NOT EXCEED MANUFACTURE'S RECOMMENDATION FOR MAXIMUM DEFLECTION.

STORM DRAINAGE NOTES

1. ALL CONSTRUCTION AND MATERIALS FOR DRAINAGE SHALL BE IN ACCORDANCE WITH THE LATEST EDITION OF THE COUNTY OF SACRAMENTO IMPROVEMENT STANDARDS ND STANDARD CONSTRUCTION SPECIFICATIONS. WHERE DISCREPANCIES EXIST, APPROPRIATE NOTES SHALL BE ADDED TO THE PLANS, TAKING PRECEDENCE OVER STANDARD CONSTRUCTION SPECIFICATIONS.
2. THE MINIMUM CO

SACRAMENTO METROPOLITAN FIRE DISTRICT NOTES

1. THE REQUIRED FIRE FLOW FOR PROTECTION OF THE PROPOSED PROJECT IS N/A GALLONS PER MINUTE (GPM), AT 20 POUNDS PER SQUARE INCH (PSI), FOR A DURATION OF N/A HOURS. THIS FLOW IS BASED ON A STRUCTURE OF TYPE N/A CONSTRUCTION OF NOT MORE THAN N/A TOTAL SQUARE FEET WITH A 50% REDUCTION FOR THE INSTALLATION OF A FULL COVERAGE AUTOMATIC FIRE SPRINKLER SYSTEM. THIS REQUIRED FIRE FLOW IS IN ADDITION TO ANY DOMESTIC WATER DEMANDS. A CHANGE IN ANY OF THESE CONDITIONS MAY INCREASE OR DECREASE THE REQUIRED FIRE FLOW. (2025 CFC APPENDIX B)

2. REQUIRED FIRE HYDRANTS CAPABLE OF PROVIDING THE REQUIRED FIRE FLOW SHALL BE INSTALLED,TESTED, FLUSHED AND APPROVED PRIOR TO ANY CONSTRUCTION (INCLUDING FOUNDATIONS) OR STORAGE OF ANY COMBUSTIBLE MATERIALS. (2025 CFC § 3312.1)

3. REQUIRED FIRE HYDRANTS SHALL BE NATIONAL STANDARD THREAD WITH ONE 4.5 INCH AND TWO 2.5 INCH OUTLETS. (NFPA 24 § 7.1.2)

4. REQUIRED PRIVATE STREETS AND FIRE APPARATUS ACCESS ROADS SHALL BE INSTALLED TO THE "FIRT LIFT"(UP TO THE LAST ONE INCH OF PAVEMENT), IDENTIFIED AND APPROVED PRIOR TO CONSTRUCTION (INCLUDING FOUNDATIONS OR STORAGE OF COMBUSTIBLE MATERIALS). PRIVATE STREETS AND FIRE APPARATUS ACCESS ROADS SHALL BE DESIGNED AND MAINTAINED TO SUPPORT THE IMPOSED LIVE LOAD OF 80,000 POUNDS, WITH A MAXIMUM AXLE LOAD OF 31,000 POUNDS, AND MEET PUBLIC WORKS STANDARDS FOR ROADWAYS. (2025 CFC § 503.2.3)

5. FIRE APPARATUS ACCESS ROADS SHALL BE MARKED OR IDENTIFIED BY ONE OF THE THREE METHODS LISTED BELOW AND SHALL BE PRESENT FOR ALL AREAS DESIGNATED AS SUCH. (CALIFORNIA VEHICLE CODE § 22500.1 AND 2025 CFC § 503.3):
   A) POSTING OF A SIGN EVERY 50-FT. ALONG AND IMMEDIATELY ADJACENT TO, AND VISIBLE FROM, THE DESIGNATED FIRE ACCESS LANE CLEARLY STATING IN LETTERS NOT LESS THAN ONE INCH IN HEIGHT THAT THE PLACE IS A FIRE LANE AND NO PARKING IS PERMITTED.
   B) BY OUTLINING OR PAINTING THE PAVEMENT RED WITH APPROVED PAVEMENT PAINT AND, IN CONTRASTING COLOR, MARKING THE PAVEMENT EVERY 25-FT. WITH WORDS "NO PARKING FIRE LANE" WHICH ARE CLEARLY VISIBLE FROM A VEHICLE.
   C) BY A RED CURB OR RED PAINT ON THE EDGE OF THE ROADWAY UPON WHICH IS CLEARLY MARKED EVERY 25-FT. WITH THE WORDS "NO PARKING FIRE LANE".

6. THE INSTALLATION OF PERIMETER FENCING, GATES, OR BARRIERS, THAT OBSTRUCTS VEHICULAR OR PEDESTRIAN INGRESS OR EGRESS TO A PROJECT SITE, BUILDING, ETC., SHALL REQUIRE A SEPARATE PLAN SUBMITTAL, REVIEW, AND APPROVAL BY THE FIRE DISTRICT PRIOR TO INSTALLATION. (2025 CFC § 503.6)

7. BLUE REFLECTIVE HYDRANT MARKERS SHALL BE INSTALLED IN ACCORDANCE WITH THE FOLLOWING: (2025 CFC § 509.1)
   A) ON UNSTRIPED ROADWAYS, BLUE MARKERS SHALL BE SET IN THE CENTER OF THE ROADWAY.
   B) ON UNDIVIDED STRIPED ROADWAYS, BLUE MARKERS SHALL BE SET 6-IN. TO THE HYDRANT SIDE OF THE CENTER STRIPE.
   C) ON DIVIDED ROADWAYS, THE BLUE MARKER SHALL BE SET 6-IN. TO THE SIDE OF THE MEDIAN OR LANE STRIPING, WHICH IS CLOSEST TO THE HYDRANT.
   D) IN LOCATIONS WHERE HYDRANTS ARE SITUATED ON CORNERS, BLUE MARKERS SHALL BE INSTALLED ON BOTH APPROACHES FRONTING THE HYDRANT.

8. UNDERGROUND PIPING SHALL BE INSTALLED IN ACCORDANCE WITH NFPA 24, STANDARD FOR THE INSTALLATION OF PRIVATE FIRE SERVICE MAINS AND THEIR APPURTENANCES AND THE APPROVED PLANS PREPARED BY A CIVIL ENGINEER OR PIPING INSTALLATION CONTRACTOR. THE UNDERGROUND FIRE SERVICE INSTALLATION CONTRACTOR SHALL SUBMIT FOR REVIEW AND APPROVAL A SCHEMATIC DRAWING SHOWING THE PART FOR PART INSTALLATION ARRANGEMENT OF THE UNDERGROUND PIPING AND APPURTENANCES AND A PARTS LIST WITH LISTING INFORMATION FOR ALL PARTS PRIOR TO INSTALLATION. A TRENCH CROSS SECTIONAL DETAIL SHALL BE INCLUDED ON THE PLANS. A COPY OF THE STAMPED APPROVED UNDERGROUND FIRE SERVICE PLANS SHALL BE ON SITE FOR ALL SACRAMENTO METROPOLITAN FIRE DISTRICT (FIRE DISTRICT) INSPECTIONS AND ACCEPTANCE TESTING. (NFPA 24 § 4.1)

9. PLASTIC PIPING APPROVED FOR UNDERGROUND INSTALLATIONS SHALL BE PVC, C900, CLASS 150 OR GREATER, AND BE LISTED FOR SUCH USE. (NFPA 24 § 10.1)

10. ALL RUNS OF NON-METALLIC WATER PIPE SHALL HAVE A NO. 10 GAUGE SOLID SOFT DRAWN COPPER LOCATOR WIRE TAPED ON TOP OF THE PIPE TO FACILITATE LOCATING THE PIPE AT A LATER DATE. THE wire shall be stubbed UP INSIDE EACH VALVE BOX. CONTINUITY TEST SHALL BE CONDUCTED ON EACH SPLICE AT ALL LOCATIONS. (NFPA 24 § 10.4.2.2)

11. GALVANIZED PIPE IS NOT APPROVED FOR UNDERGROUND SUPPLY PIPING. (NFPA 24 § 10.1)

12. NON-METALLIC PIPE SHALL NOT BE USED WITHIN 5-FT. OF A BUILDING. (NFPA 24 § 10.4.3)

13. THE FIRE SPRINKLER RISER SHALL BE LOCATED ON THE OUTSIDE WALL, 12-24 INCHES FROM THAT OUTSIDE WALL AND AT LEAST 12 INCHES FROM ANY OTHER WALL. (NFPA 13 6.3.1.1.1)

14. ABOVE GRADE VALVES FOR CONTROLLING THE WATER SUPPLY FOR ON-SITE FIRE HYDRANTS AND AUTOMATIC FIRE SPRINKLER SYSTEMS SHALL BE INDICATING VALVES AND ELECTRICALLY SUPERVISED. (NFPA 24 § 6.7.2) AND (CFC § 903.6.1)

15. ALL PIPING SHALL BE LAID IN A 6-IN. BED OF SAND OR NATURAL GRAVEL NOT OVER 1-IN. IN DIAMETER AND HAVE A 12-IN. FILL OF SAND OR NATURAL GRAVEL NOT OVER 1-IN. IN DIAMETER. (NFPA 24 § 10.9.3)

16. A STRAND OF MINIMUM 3-IN. WIDE NON-DETECTABLE BLUE TAPE MARKED "CAUTION: BURRIED WATERLINE BELOW" SHALL BE PLACED 12-INCHES ABOVE ALL PIPING. 2016 (NFPA 24 § 10.9.6)

17. ALL SECTIONS OF DUCTILE IRON PIPE OR DUCTILE IRON FITTINGS SHALL BE ENCASED IN EITHER 8-MIL LINEAR LOW DENSITY (LLD) OR 4-MIL HIGH-DENSITY, CROSS-LAMINATED (HDCL) POLYETHYLENE SHEETS OR TUBES IN ACCORDANCE WITH AMERICAN WATER WORKS ASSOCIATION STANDARD C105/A21.5-05, POLYETHYLENE ENCASEMENT FOR DUCTILE-IRON PIPE SYSTEMS. ANY FASTENERS SHALL BE MADE OF LOW-ALLOY STEEL. (NFPA 24 § 10.4.1.1)

18. CONCRETE THRUST BLOCKS OR OTHER APPROVED RETAINING, SHALL BE INSTALLED AT ALL LOCATIONS WHERE PIPING CHANGES DIRECTION. (NFPA 24 § 10.6.1)

19. A 200-PSI HYDROSTATIC PRESSURE TEST SHALL BE PERFORMED, AND WITNESSED BY THE DISTRICT, FOR ALL INSTALLED PIPING AND APPURTENANCES FOR A PERIOD OF 2 HOURS. THE PIPING SHALL BE CENTER-LOADED DURING PRESSURE TESTING WITH ALL JOINTS, FITTINGS AND APPURTENANCES UNCOVERED. FAILURE TO COMPLY WITH THIS SECTION WILL RESULT IN A TEST FAILURE AND THE UNCOVERING OF THE PIPING FOR A VISUAL INSPECTION AND RETESTING.(NFPA 24 § 10.10.2.2)

    A FIRE SPRINKLER UNDERGROUND SUPPLY PIPING FLUSH, USING A FULL PIPE DIAMETER DISCHARGE, SHALL BE CONDUCTED AND WITNESSED BY THE FIRE DISTRICT PRIOR TO CONNECTION TO THE ABOVE GROUND FIRE SPRINKLER SYSTEM. FLUSHING SHALL BE PERFORMED UTILIZING BURLAP SACKS OR EQUIVALENT, TO STRAIN THE HOSE OUTLET(S). PIPING SHALL BE FLUSHED UNTIL NO FOREIGN OBJECTS ARE LOCATED IN THE BURLAP SACK(S) AND THE WATER IS CLEAR. CONTRACTORS SHALL HAVE THE APPROPRIATE TOOLS AND EQUIPMENT ON-SITE TO COMPLETE THE FLUSH IN A TIMELY MANNER INCLUDING SUFFICIENT FIRE HOSE TO DIRECT THE WATER TO A SAFE AND APPROVED LOCATION. ADEQUATE DRAINAGE SHALL BE AVAILABLE TO ACCEPT A MINIMUM OF FIVE MINUTES FLOW PER 100 FEET OF PIPE AT THE REQUIRED FLUSH FLOW RATE OUTLINED IN NFPA 24, IT IS THE RESPONSIBILITY OF THE APPLICANT TO OBTAIN ALL NECESSARY APPROVALS PRIOR TO RELEASE OF WATER TO THE ENVIRONMENT. (NFPA 24 § 10.10.2.1)

20. THE FIRE DEPARTMENT CONNECTION PIPING SHALL ALSO BE FLUSHED IF CONNECTED TO THE FIRE SPRINKLER SUPPLY PIPING BELOW GRADE. PIPING SHALL BE FLUSHED UNTIL ALL FOREIGN OBJECTS HAVE BEEN DISCHARGED AND THE WATER IS CLEAR. (NFPA 24 § 10.10.2.1)

21. A FIRE HYDRANT FLUSH, USING THE 4- ½ INCH "STEAMER"OUTLET, SHALL BE CONDUCTED AT ALL HYDRANTS AND WITNESSED BY THE FIRE DISTRICT. PIPING SHALL BE FLUSHED UNTIL ALL FOREIGN OBJECTS HAVE BEEN DISCHARGED AND THE WATER IS CLEAR. (NFPA 24 § 10.10.2.1)

22. A CONTRACTOR'S MATERIAL AND TEST CERTIFICATE FOR UNDERGROUND PIPING FORM SHALL BE SIGNED BY THE INSTALLING CONTRACTOR AND OWNERS' REPRESENTATIVE. A COPY OF THIS FORM SHALL BE PROVIDED TO THE FIRE DISTRICT PRIOR TO FINAL ACCEPTANCE OF THE UNDERGROUND WORK. (NFPA 24 §10.10.1)

23. FIRE SPRINKLER PLANS WILL NOT BE ACCEPTED UNTIL CIVIL IMPROVEMENT PLANS, NEW BUILDING PLANS, AND UNDERGROUND FIRE SERVICE PLANS ARE SUBMITTED AND APPROVED.

24. UNDERGROUND FIRE SERVICE PLANS WILL NOT BE ACCEPTED UNTIL CIVIL IMPROVEMENT PLANS ARE SUBMITTED AND APPROVED.

LEGEND (PLANS)

EXISTING	PROPOSED	DESCRIPTION
123	123	LOT NUMBER
TC 16.25	TC 16.25	TOP OF CURB ELEVATION
TRC 16.25	TRC 16.25	TOP OF ROLLED CURB ELEVATION
		BOUNDARY
		RIGHT OF WAY
		LOT LINE
		EASEMENT
		PROPERTY LINE
		EDGE OF PAVEMENT
		FLOWLINE
		6' MASONRY WALL
		CURB, GUTTER AND SIDEWALK
		CENTERLINE
EX SS	SS	SANITARY SEWER PIPE
		SANITARY SEWER MANHOLE
EX SD	SD	STORM DRAIN PIPE
		STORM DRAIN MANHOLE
	W	WATER PIPE
		CATCH BASIN
		VALVE
		FIELD INLET
		CLEANOUT
		BLOW OFF VALVE
		AIR RELEASE VALVE
		FIRE HYDRANT
		DOUBLE CHECK VALVE
		WATER METER
		SURVEY MONUMENT

ABBREVIATION LIST

AB	AGGREGATE BASE	MH	MANHOLE
AC	ASPHALT	MIN	MINIMUM
AER	AERATION LINE	MTC	MEDIAN TOP OF CURB
ARV	AIR RELEASE VALVE	NIC	NOT INCLUDED
BC	BEGIN CURVE	NPW	NON-POTABLE WATER
BOV	BLOWOFF VALVE	NTS	NOT TO SCALE
BV	BUTTERFLY VALVE	PCC	POINT OF COMPOUND CURVE
BW	BOTTOM OF WALL	POC	POINT OF CONNECTION
C&G	CURB AND GUTTER	PKWY	PARKWAY
CB	CATCH BASIN	PL	PROPERTY LINE
CL	CENTER LINE	PRC	POINT OF REVERSE CURVE
DW	DRIVEWAY	PT	POINT
EA	EACH	PVMT	PAVEMENT
EC	END CURVE	PUE	PUBLIC UTILITY EASEMENT
ELEV	ELEVATION	R	RESIDENTIAL
EP	EDGE OF PAVEMENT	RCP	REINFORCED CONCRETE PIPE
EVA	EMERGENCY VEHICLE ACCESS	RET	RETURN
EX	EXISTING	R/W	RIGHT OF WAY
FG	FINISHED GRADE	RT	RIGHT
FH	FIRE HYDRANT	RV	RESILIENT GATE VALVE
FI	FIELD INLET	RW	RECYCLED WATER
FH (#)	FIRE HYDRANT NUMBER	S	SLOPE
FL	FLOW LINE	S/W	SIDEWALK
FS	FLOW SERVICE	SD	STORM DRAIN
GB	GRADE BREAK	SDE	STORM DRAIN EASEMENT
GR	GRATE	SF	SQUARE FEET
GV	GATE VALVE	SS	SANITARY SEWER
HP	HIGH POINT	SSE	SANITARY SEWER EASEMENT
INV	INVERT	STA	STATION
JT	JOINT TRENCH	STD	STANDARD
LC	LAKE CIRCULATION	(T)	TOTAL
LF	LINEAR FEET	TC	TOP OF VERTICAL CURB
LFL	LAKE FILL LINE	TRC	TOP OF ROLLED CURB
LG	LIP OF GUTTER	TW	TOP OF WALL
LP	LOW POINT	TYP	TYPICAL
LS	LANDSCAPE	VC	VERTICAL CURB
LT	LEFT	W	WATER
MAX	MAXIMUM	WS	WATER SERVICE

811 Know what's below. Call before you dig.

Westwood
Westwood Professional Services, Inc.
8200 STONERIDGE MALL ROAD, SUITE 330
PLEASANTON, CA 94588
T: 925.223.8340
westwoodps.com

NO.	DESCRIPTION	DATE	BY	APP. DATE	APP.

ANTELOPE, CALIFORNIA

SIERRA CREEK COMMUNITY PARK
GENERAL NOTES

DATE: 08/31/2026
DRAFTER: JJ
DESIGNER: ZW
CHECKED: RC
PROJECT NO. 41541

REGISTERED PROFESSIONAL ENGINEER ROBERT T CHEN 59425 CIVIL STATE OF CALIFORNIA

C1.1

####

Last Saved by: Czarnecki
Plot Date: Wednesday, 09/03/2025 11:52 AM
Drawing: N:_ODE\Pleasanton\41541 NRHPD Sierra Creek Park\Civil\ConstPlans\Onsite\41541-GR.(CIVIL)

MATCHLINE "A" - SEE SHEET C2.2

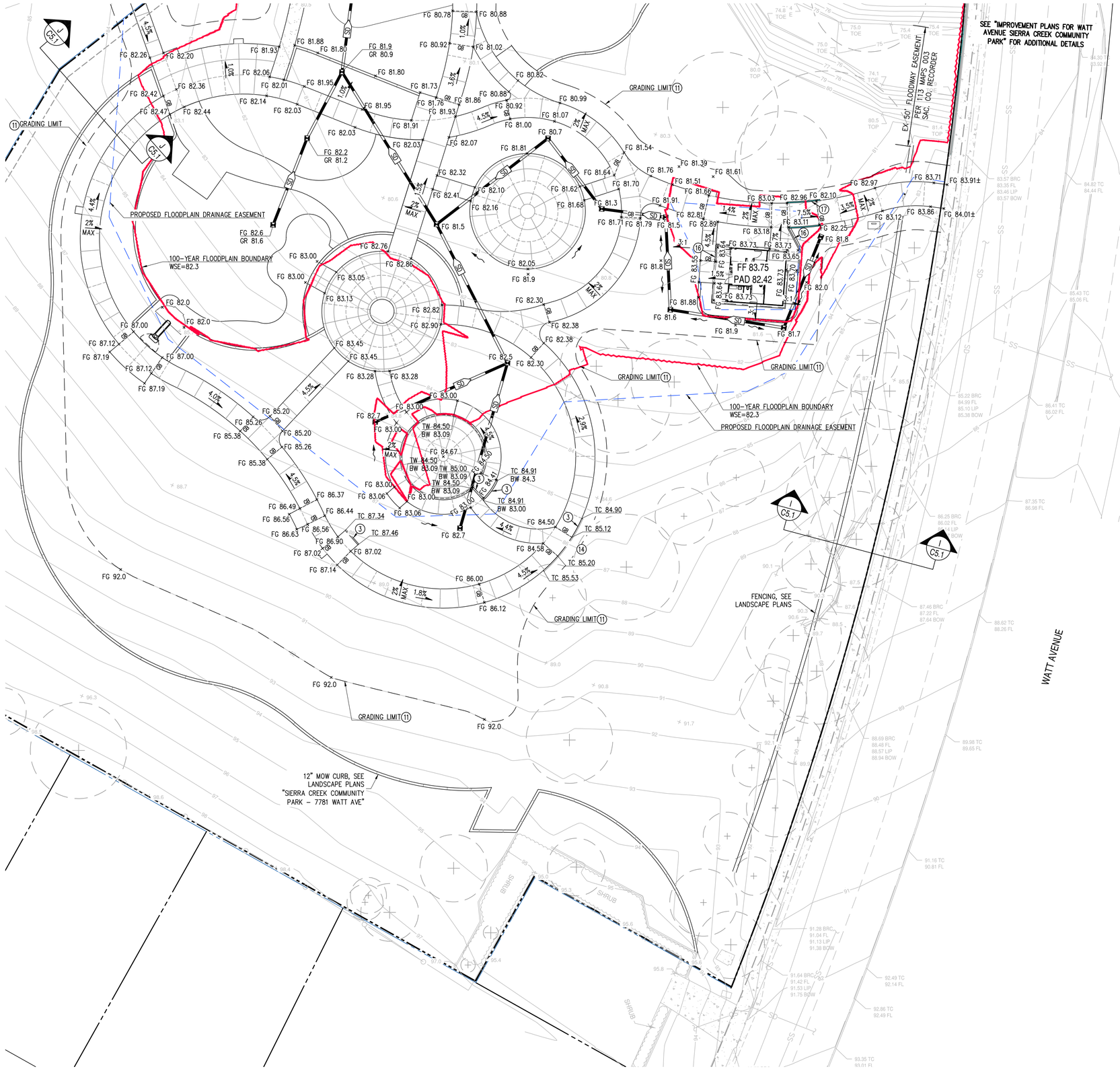

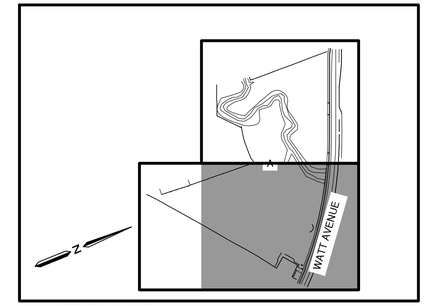

LOCATION MAP

1"=300'

LEGEND:

- PROPOSED PAVEMENT (2.5" AC/8" AB, TI = 4)
- VEGETATED SWALE AND STORMWATER PLANTER, SEE DETAIL A SHEET C5.2
- APPROXIMATE 100 BOUNDAARY PER "SIERRA CREEK PARK HYDRAULIC ANALYSIS" PREPARED BY TODD REMINGTON, DATED 5/28/2024
- PROPOSED FLOODPLAIN DRAINAGE EASEMENT
- (1) CASE C RAMP, PER DETAIL A88A SHEET C6.2
- (2) MODIFIED VERTICAL CURB & GUTTER PER DETAIL B SHEET C6.1
- (3) TYPE 3 CURB PER COUNTY OF SACRAMENTO STD 4–30 SHEET C6.2
- (4) MAX 2% SLOPE IN ALL DIRECTIONS WITHIN ADA PARKING STALLS AND ACCESS AISLES
- (5) FLOW THRU CURB PER DETAIL C SHEET C6.1
- (6) CURB TRANSITION PER DETAIL D SHEET C6.1
- (7) UNDER SIDEWALK DRAIN PER DETAIL A SHEET C6.1
- (8) WALKWAY AT CULVERT PER LANDSCAPE PLANS "SIERRA CREEK COMMUNITY PARK – 7781 WATT AVE"DETAIL 5 SHEET L6.1
- (9) BRIDGE BY OTHERS
- (10) MAINTAIN 30" MAXIMUM FROM WALKWAY SURFACE TO ADJACENT FG NEXT TO WALKWAY
- (11) CONTRACTOR TO GRADE 5:1 MAX SLOPE UNTIL REACHING EX GRADE
- (12) TYPE 1A CURB & GUTTER WITH ATTACHED SIDEWALK PER COUNTY OF SACRAMENTO STD 4–30 SHEET C6.2
- (13) 5' CURB TRANSITION (TC TO TRC)
- (14) CONTRACTOR TO GRADE 3:1 MAX SLOPE UNTIL REACHING EX GRADE AT DRIPLINE OF EXISTING TREE
- (15) BIORETENTION SEE DETAIL A SHEET C5.2
- (16) VARYING CURB WALL 1.5' MAX
- (17) HANDRAIL & CURB RAMP PER LANDSCAPE PLANS "SIERRA CREEK COMMUNITY PARK – 7781 WATT AVE" SHEET L6.1

NOTES:

1. CONTRACTOR TO MAINTAIN 2% MAX CROSS SLOPE ON WALKWAYS
2. SEE GEOTECHNICAL REPORT FOR ADDITIONAL GRADING DETAIL
3. ROOT BARRIERS SHALL BE PROVIDED ONLY AS REQUIRED PER SECTION 4, SUBSECTION 4–32 OF THE COUNTY IMPROVEMENT STANDARDS.

SIERRA CREEK – EARTHWORK SUMMARY

SITE	CUT (CY)	FILL (CY)	NET (CY)
ON-SITE	4,680	3,880	800 (C)
SHRINKAGE (5%)	(240)		
CONSOLIDATION (0.10')	(560)		
TOTAL	3,880	3,880	0

0 10 20 40

SCALE: 1" = 20'

Know what's **below.** **Call** before you dig.

Westwood
Westwood Professional Services, Inc.
8200 STONERIDGE MALL ROAD, SUITE 300
PLEASANTON, CA 94588
T: 925.223.8340
wwdesign.com

NO.	DESCRIPTION	DATE	BY	APP. DATE	APP.

ANTELOPE, CALIFORNIA

SIERRA CREEK COMMUNITY PARK GRADING PLAN

DATE: 08/31/2026
DRAFTER: JJ
DESIGNER: ZW
CHECKED: RC

PROJECT NO. 41541

REGISTERED PROFESSIONAL ENGINEER ROBERT T. CHEN 59425 CIVIL STATE OF CALIFORNIA

C2.1

####

Last Saved by: Cravenjon
Plot Date: Tue 8/26/2025 11:52 AM
Drawing: N:_ODE\Pleasanton\41541 NRHPD Sierra Creek Park\Civil\ConstPlans\Onsite\41541-GR (CIVIL)

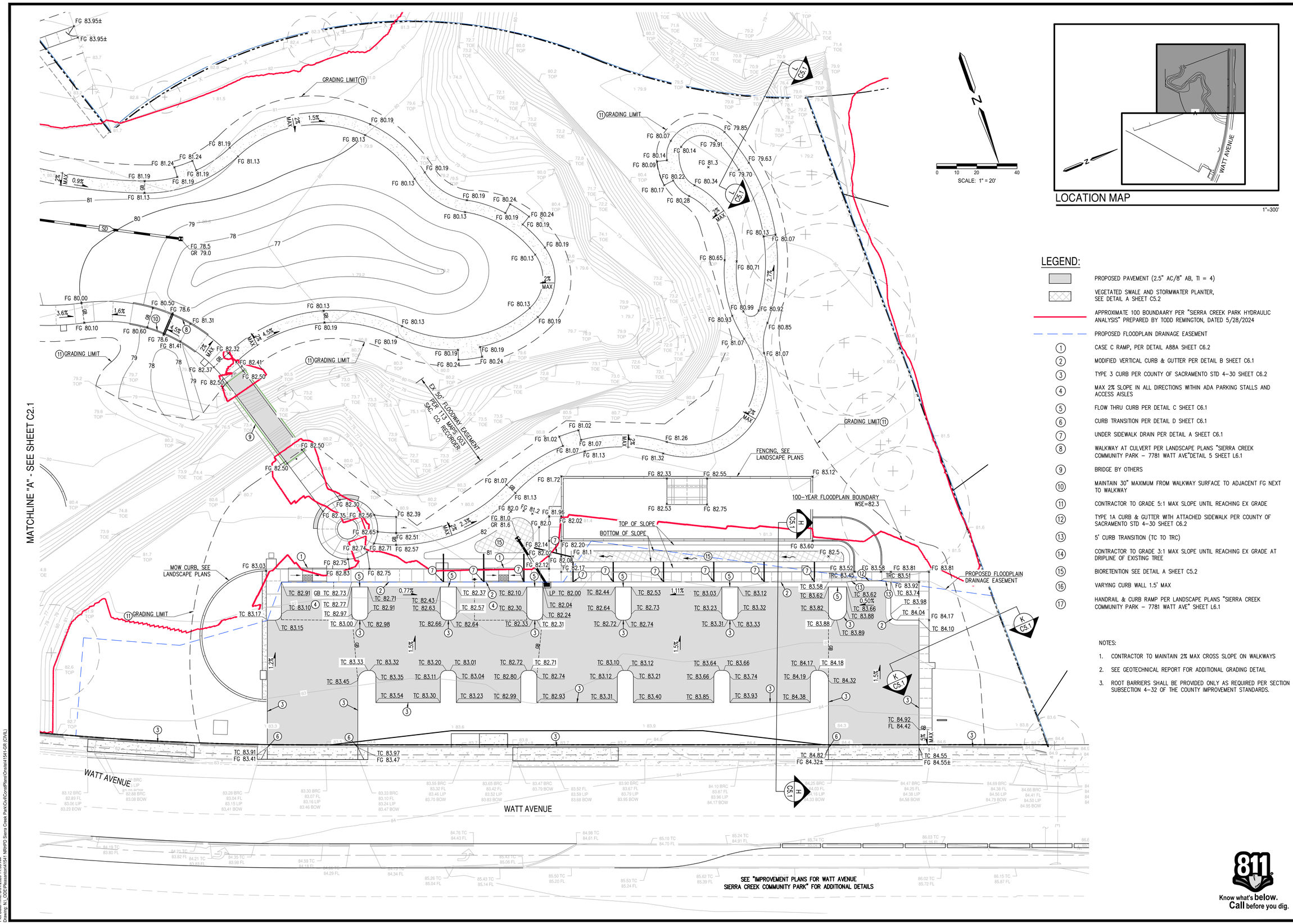

Westwood
Westwood Professional Services, Inc.
8200 STONERIDGE MALL ROAD, SUITE 330
PLEASANTON, CA 94588
T: 925.223.8340
westwoodps.com

NO.	DESCRIPTION	DATE	BY	APP. DATE	APP.

ANTELOPE, CALIFORNIA

SIERRA CREEK COMMUNITY PARK
GRADING PLAN

DATE: 08/31/2026
DRAFTER: JJ
DESIGNER: ZW
CHECKED: RC
PROJECT NO. 41541

REGISTERED PROFESSIONAL ENGINEER ROBERT T. CHEN 59425 CIVIL STATE OF CALIFORNIA

C2.2

####

811 Know what's below. Call before you dig.

Last Saved by: Cravenzion
Plot Date: Tuesday, October 01, 2024 11:53 AM
Drawing: N:_ODE\Pleasanton\41541 NRHPD Sierra Creek Park\Civil\Const\Plans\Onsite\41541-GR (CIVIL)

MATCHLINE "A" - SEE SHEET C3.2

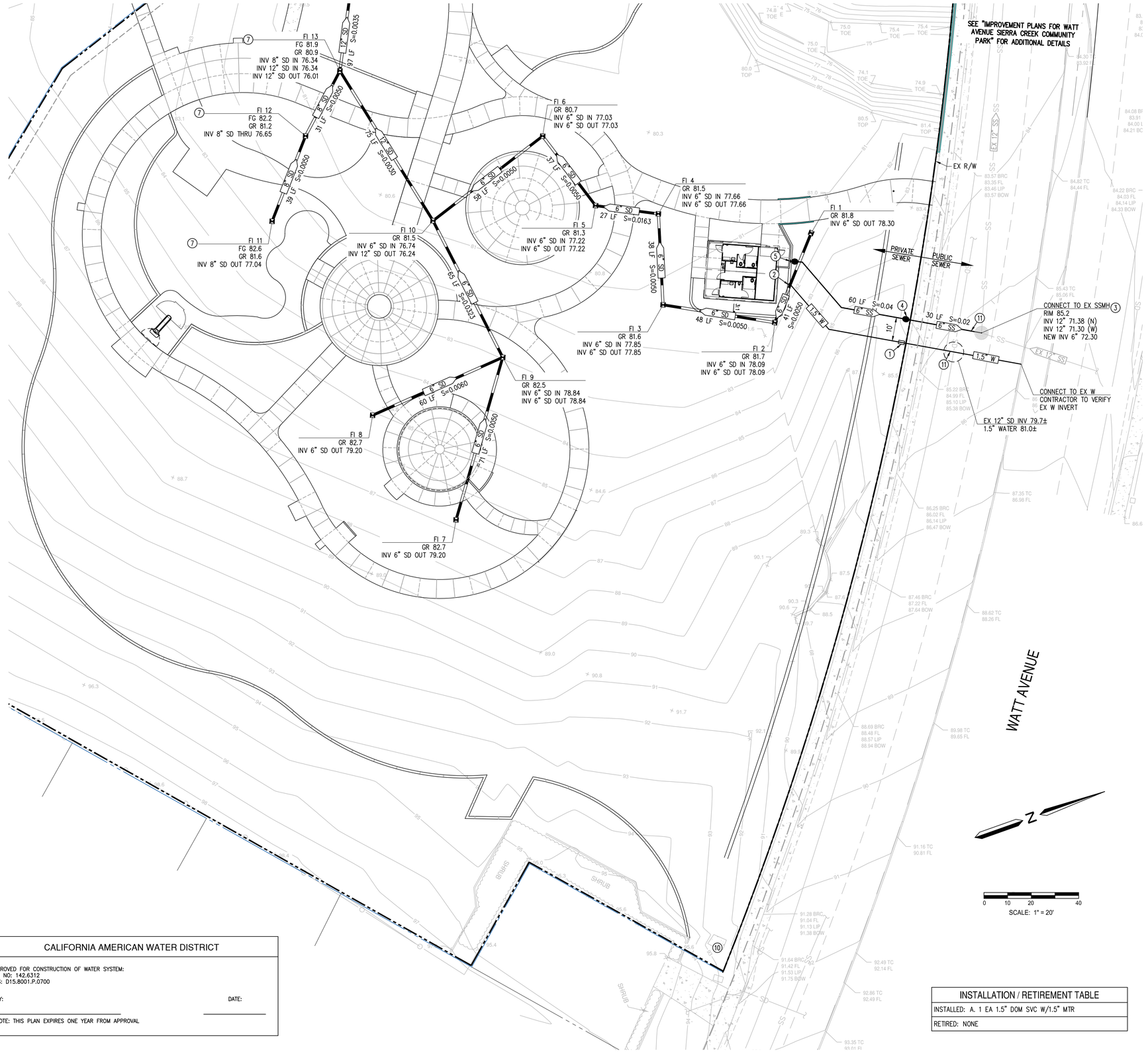

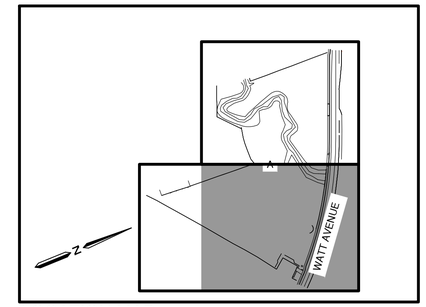

LOCATION MAP

STORM DRAIN STRUCTURE SCHEDULE		
STRUCTURE	TYPE	DESCRIPTION
CB 1	SACRAMENTO COUNTY 9-13B	DROP INLET TYPE B
FI 10-15	CHRISTY V24	V24 DRAIN BOX 20-3/4" X 19-1/4"
FI 1-8	NDS 9" CATCH BASIN	NDS 9"X9" CATCH BASIN (PART NO. 932) W/ NDS GRATE (PART NO. 980) OR APPROVED EQUAL
FI 9	NDS 9" CATCH BASIN	NDS 9"X9" CATCH BASIN (PART NO. 932) W/ NDS ATRIUM GRATE (PART NO. 981) OR APPROVED EQUAL

LEGEND:

1. 1.5" WATER METER & 1.5" WATER SERVICE PER CAW STANDARD DETAILS CAW-ND-W202 & CAW-ND-W204. SEE SHEET C6.3. INSTALL REDUCED PRESSURE BACKFLOW PER UBC LIST OF APPROVED DEVICES.
2. 1.5" WATER SERVICE, INV 3' BELOW FF, SEE PLANS BY OTHERS FOR CONTINUATION
3. ADJUST EX SSMH TO GRADE AS NEEDED PER SACRAMENTO AREA SEWER DISTRICT DETAIL MH-03, SEE NOTE #6 FOR MORE DETAIL
4. CONSTRUCT 30 LF 6" PVC SEWER LOWER LATERAL PER SACRAMENTO AREA SEWER DISTRICT DETAIL LL-01A @2% SLOPE WITH WYE CONNECTION & W/ CLEANOUT PER DETAIL LL-02 AT RIGHT-OF-WAY.
5. PRIVATE SEWER, INV 5' BELOW FF, SEE PLANS BY OTHERS FOR CONTINUATION
6. UNDER SIDEWALK DRAIN PER DETAIL A SHEET C6.1
7. CONNECT TO RUBBER SURFACING DRAINAGE SYSTEM. DRAIN INLET GRATE ELEVATION TO BE SET UNDER RUBBER SURFACING
8. BUBBLE UP FIELD INLET, SEE DETAIL E SHEET C6.1
9. STORM DRAIN CULVERT PER LANDSCAPE PLANS "SIERRA CREEK COMMUNITY PARK – 7781 WATT AVE" DETAIL 5 SHEET L6.1
10. IRRIGATION POC, CONNECT TO EXISTING 2-2" WATER METER AND 3" BACKFLOW PREVENTION DEVICE. SEE LANDSCAPE PLANS "SIERRA CREEK COMMUNITY PARK – 7781 WATT AVE" SHEET L4.1 FOR IRRIGATION DETAILS
11. TRENCHING AND PAVEMENT RESTORATION PER COUNTY OF SACRAMENTO STD 4-64 SEE SHEET C6.2, WATER TRENCH WIDTH PER SACRAMENTO COUNTY CONSTRUCTION SPECIFICATIONS SECTION 19 AND SEWER TRENCH WIDTH PER SASD SECTION 311

NOTES:

1. POTABLE WATER MAIN SHALL MAINTAIN A MINIMUM OF 4' COVER.
2. CONTRACTOR SHALL FIELD VERIFY EXISTING UTILITIES INVERT AND LOCATION PRIOR TO ESTABLISHING CONNECTIONS.
3. CONTRACTOR SHALL MAINTAIN MIN VERTICAL CLEARANCE BETWEEN WATER SERVICE LATERALS AND OTHER UTILITIES.
4. TREE COORDINATION NOTE: WATER LINES, DRAIN LINES, SEWER LINES AND OTHER UTILITIES SHOWN ON THESE PLANS HAVE BEEN COORDINATED WITH REQUIRED TREE LOCATIONS. ELECTRICAL CONDUITS OR OTHER UTILTIES NOT SHOWN ON THESE PLANS SHALL BE LOCATED SO AS TO NOT CONFLICT WITH REQUIRED TREE LOCATIONS. SEE APPROVED LANDSCAPE PLANS FOR LOCATIONS.
5. ALL ONSITE DRAINAGE IMPROVEMENTS SHALL BE CONSIDERED AS PRIVATE FACILITIES AND MAINTAINED BY THE PROPERTY OWNER.
6. SEWER TAP NOTE:
   SACRAMENTO AREA SEWER DISTRICT WILL PERFORM THE SEWER TAP AFTER PAYMENT OF FEES. EMAIL PERMITSERVICES@SACSEWER.COM WITH THE FOLLOWING INFORMATION TO PAY SEWER TAP FEES.
   - APPROVED IMPROVEMENT PLANS (WITH PRE-CONSTRUCTION APPROVAL SIGNATURE FOR LOWER LATERAL ONLY PLANS)
   - ORDER NUMBER
   - CONTRACTOR'S NAME AND PHONE NUMBER

   CONTRACTOR WILL PROVIDE ALL TRAFFIC CONTROL, PAVEMENT CUTTING, EXCAVATION, SHORING, PIPE LAYING, PIPE BEDDING, BACKFILL, AND RESTORATION IN ACCORDANCE WITH THESE PLANS AND THE LOCAL JURISDICTION. AN ACCESS PERMIT IS REQUIRED BEFORE CONNECTING TO THE SACRAMENTO AREA SEWER DISTRICT'S SYSTEM. PLEASE ALLOW 10 BUSINESS DAYS FOR PROCESSING OF THE ACCESS PERMIT.
7. NOT APPROVED FOR PRIVATE UNDERGROUND FIRE SERVICE INSTALLATION. A SEPARATE PLAN SUBMITTAL IS REQUIRED FROM THE INSTALLING CONTRACTOR. SEE SACRAMENTO METROPOLITAN FIRE DISTRICT NOTES.

CALIFORNIA AMERICAN WATER DISTRICT
APPROVED FOR CONSTRUCTION OF WATER SYSTEM: FILE NO: 142.6312 WBS: D15.8001.F.0700
BY: DATE:
NOTE: THIS PLAN EXPIRES ONE YEAR FROM APPROVAL

INSTALLATION / RETIREMENT TABLE
INSTALLED: A. 1 EA 1.5" DOM SVC W/1.5" MTR
RETIRED: NONE

Know what's below. Call before you dig.

Westwood
Westwood Professional Services, Inc.
6200 STONERIDGE MALL ROAD, SUITE 330
PLEASANTON, CA 94588
T: 925.223.8340
westwoodps.com

NO.	DESCRIPTION	DATE	BY	APP. DATE	APP.

ANTELOPE, CALIFORNIA

SIERRA CREEK COMMUNITY PARK
UTILITY PLAN

DATE: 08/31/2026
DRAFTER: JJ
DESIGNER: ZW
CHECKED: RC
PROJECT NO. 41541

REGISTERED PROFESSIONAL ENGINEER ROBERT I. CREE 59425 CIVIL STATE OF CALIFORNIA

C3.1

####

Last Saved by: Czwernich
Plot Date/Time: 8/31/2026 11:54 AM
Drawing: N:_ODE\Pleasanton\41541 NRHPD Sierra Creek Park\Civil\Const\Plans\Onsite\41541-UT (CIVIL)

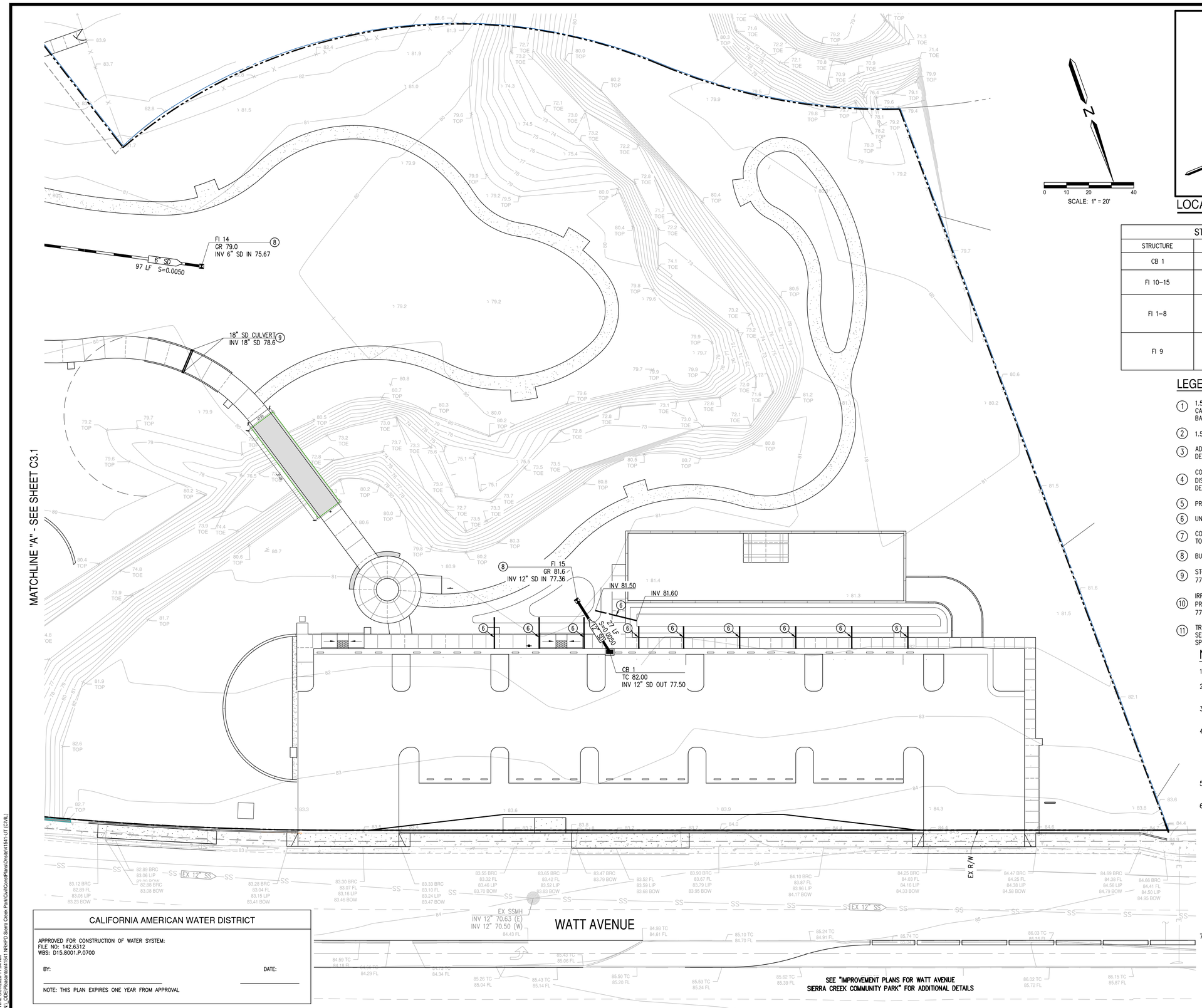

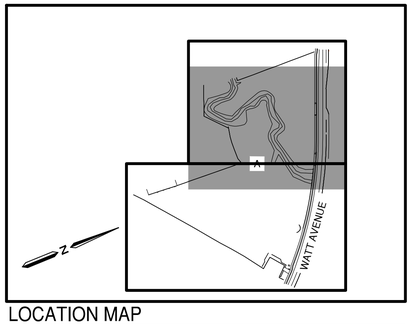

LOCATION MAP

1"=300'

STORM DRAIN STRUCTURE SCHEDULE		
STRUCTURE	TYPE	DESCRIPTION
CB 1	SACRAMENTO COUNTY 9-13B	DROP INLET TYPE B
FI 10-15	CHRISTY V24	V24 DRAIN BOX 20-3/4" X 19-1/4"
FI 1-8	NDS 9" CATCH BASIN	NDS 9"X9" CATCH BASIN (PART NO. 932) W/ NDS GRATE (PART NO. 980) OR APPROVED EQUAL
FI 9	NDS 9" CATCH BASIN	NDS 9"X9" CATCH BASIN (PART NO. 932) W/ NDS ATRIUM GRATE (PART NO. 981) OR APPROVED EQUAL

LEGEND:

1. 1.5" WATER METER & 1.5" WATER SERVICE PER CAW STANDARD DETAILS CAW-ND-W202 & CAW-ND-W204. SEE SHEET C6.3. INSTALL REDUCED PRESSURE BACKFLOW PER UBC LIST OF APPROVED DEVICES.
2. 1.5" WATER SERVICE, INV 3' BELOW FF, SEE PLANS BY OTHERS FOR CONTINUATION
3. ADJUST EX SSMH TO GRADE AS NEEDED PER SACRAMENTO AREA SEWER DISTRICT DETAIL MH-03, SEE NOTE #6 FOR MORE DETAIL
4. CONSTRUCT 30 LF 6" PVC SEWER LOWER LATERAL PER SACRAMENTO AREA SEWER DISTRICT DETAIL LL-01A @2% SLOPE WITH WYE CONNECTION & W/ CLEANOUT PER DETAIL LL-02 AT RIGHT-OF-WAY.
5. PRIVATE SEWER, INV 5' BELOW FF, SEE PLANS BY OTHERS FOR CONTINUATION
6. UNDER SIDEWALK DRAIN PER DETAIL A SHEET C6.1
7. CONNECT TO RUBBER SURFACING DRAINAGE SYSTEM. DRAIN INLET GRATE ELEVATION TO BE SET UNDER RUBBER SURFACING
8. BUBBLE UP FIELD INLET, SEE DETAIL E SHEET C6.1
9. STORM DRAIN CULVERT PER LANDSCAPE PLANS "SIERRA CREEK COMMUNITY PARK – 7781 WATT AVE" DETAIL 5 SHEET L6.1
10. IRRIGATION POC, CONNECT TO EXISTING 2-2" WATER METER AND 3" BACKFLOW PREVENTION DEVICE. SEE LANDSCAPE PLANS "SIERRA CREEK COMMUNITY PARK – 7781 WATT AVE" SHEET L4.1 FOR IRRIGATION DETAILS
11. TRENCHING AND PAVEMENT RESTORATION PER COUNTY OF SACRAMENTO STD 4-64 SEE SHEET C6.2, WATER TRENCH WIDTH PER SACRAMENTO COUNTY CONSTRUCTION SPECIFICATIONS SECTION 19 AND SEWER TRENCH WIDTH PER SASD SECTION 311

NOTES:

1. POTABLE WATER MAIN SHALL MAINTAIN A MINIMUM OF 4' COVER.
2. CONTRACTOR SHALL FIELD VERIFY EXISTING UTILITIES INVERT AND LOCATION PRIOR TO ESTABLISHING CONNECTIONS.
3. CONTRACTOR SHALL MAINTAIN MIN VERTICAL CLEARANCE BETWEEN WATER SERVICE LATERALS AND OTHER UTILITIES.
4. TREE COORDINATION NOTE: WATER LINES, DRAIN LINES, SEWER LINES AND OTHER UTILITIES SHOWN ON THESE PLANS HAVE BEEN COORDINATED WITH REQUIRED TREE LOCATIONS. ELECTRICAL CONDUITS OR OTHER UTILTIES NOT SHOWN ON THESE PLANS SHALL BE LOCATED SO AS TO NOT CONFLICT WITH REQUIRED TREE LOCATIONS. SEE APPROVED LANDSCAPE PLANS FOR LOCATIONS.
5. ALL ONSITE DRAINAGE IMPROVEMENTS SHALL BE CONSIDERED AS PRIVATE FACILITIES AND MAINTAINED BY THE PROPERTY OWNER.
6. SEWER TAP NOTE:
   SACRAMENTO AREA SEWER DISTRICT WILL PERFORM THE SEWER TAP AFTER PAYMENT OF FEES. EMAIL PERMITSERVICES@SACSEWER.COM WITH THE FOLLOWING INFORMATION TO PAY SEWER TAP FEES.
   - APPROVED IMPROVEMENT PLANS (WITH PRE-CONSTRUCTION APPROVAL SIGNATURE FOR LOWER LATERAL ONLY PLANS)
   - ORDER NUMBER
   - CONTRACTOR'S NAME AND PHONE NUMBER

   CONTRACTOR WILL PROVIDE ALL TRAFFIC CONTROL, PAVEMENT CUTTING, EXCAVATION, SHORING, PIPE LAYING, PIPE BEDDING, BACKFILL, AND RESTORATION IN ACCORDANCE WITH THESE PLANS AND THE LOCAL JURISDICTION. AN ACCESS PERMIT IS REQUIRED BEFORE CONNECTING TO THE SACRAMENTO AREA SEWER DISTRICT'S SYSTEM. PLEASE ALLOW 10 BUSINESS DAYS FOR PROCESSING OF THE ACCESS PERMIT.
7. NOT APPROVED FOR PRIVATE UNDERGROUND FIRE SERVICE INSTALLATION. A SEPARATE PLAN SUBMITTAL IS REQUIRED FROM THE INSTALLING CONTRACTOR. SEE SACRAMENTO METROPOLITAN FIRE DISTRICT NOTES.

CALIFORNIA AMERICAN WATER DISTRICT

APPROVED FOR CONSTRUCTION OF WATER SYSTEM:
FILE NO: 142.6312
WBS: D15.8001.P.0700

BY: _____ DATE: _____

NOTE: THIS PLAN EXPIRES ONE YEAR FROM APPROVAL

Know what's **below.**
Call before you dig.

Westwood
Westwood Professional Services, Inc.
6200 STONERIDGE MALL ROAD, SUITE 330
PLEASANTON, CA 94588
T: 925.223.8340
westwoodps.com

NO.	DESCRIPTION	DATE	BY	APP. DATE	APP.

ANTELOPE, CALIFORNIA

SIERRA CREEK COMMUNITY PARK
UTILITY PLAN

DATE: 08/31/2026
DRAFTER: JJ
DESIGNER: ZW
CHECKED: RC
PROJECT NO. #####

REGISTERED PROFESSIONAL ENGINEER ROBERT I. CREEK 59425 CIVIL STATE OF CALIFORNIA

C3.2

####

Last Saved by: Czwernich
Plot Date/Time: 8/31/2026 11:54 AM
Drawing: N:_CDE\Pleasanton\41541 NRHPD Sierra Creek Park\Civil\Const\Plans\Onsite\41541-UT (CIVIL)

PARKING SUMMARY		
DESCRIPTION	REQUIRED	PROVIDED
STANDARD		20
ADA PARKING	2	2
STANDARD ADA		1
VAN ACCESSIBLE	1	1
EVCS (TOTAL)	2	2
EVCS – STANDARD		1
EVCS – ADA	1	1
STANDARD ADA		0
VAN ACCESSIBLE	1	1
EVCS – FUTURE (CAPABLE)	6	6
COMPACT	24 (MAX)	22
MOTORCYCLE	2	2
TOTAL		48

LEGEND

- SIGN
- EV CHARGER LOCATION (FOR REFERENCE ONLY)
- REFLECTIVE "BLUE DOT" FIRE HYDRANT MARKER INSTALLED ADJACENT TO THE HYDRANT 6" OFF CENTERLINE OR MEDIAN WHICH EVER IS CLOSER AS SHOWN
- FIRE HYDRANT
- ACCESSIBLE CURB RAMP
- "STOP" LEGEND PER CITY OF LATHROP DETAIL R-34
- (1) RED CURB PAINT "FIRE LANE NO PARKING" IN 4" TALL WHITE LETTERS TO BE PAINTED ON THE SIDE OF ALL ON-SITE RED CURB
- (2) FIGURE 3B-22(CA), DISABLED PERSONS PARKING SYMBOL, LEGEND, AND RELATED MARKINGS PER CA-MUTCD LATEST EDITION
- (3) EVCS ADA STALLS AND ACCESS AISLE PER CBC 11B-812 AND CBC FIG 11B-812.9
- (4) EVCS MARKING PER FIG 3B-108(CA) PER CA-MUTCD LATEST EDITION
- (5) FUTURE EVCS STALL, CONTRACTOR SHALL MAKE REQUIRED IMPROVEMENTS TO MEET CURRENT ADA STANDARDS AT TIME OF INSTALLATION
- (6) COMPACT STALL MARKING
- (7) MOTORCYCLE PARKING MARKING
- (8) EV CHARGER CLEAR SPACE (30"X48"), SEE CBC 11B-812.10.4 AND CBC FIG 11B-812.9

PAVEMENT MARKING DETAILS

- (7C.02) SECTION 7C.02 (12" YELLOW LINES SPACED 12" TO 60" APART) & FIG.3B-19 PER CA-MUTCD LATEST EDITION.
- (9) DETAIL 4 (4" WHITE LINE W/ PAVEMENT MARKERS) – LANE LINE MARKING PER CA-MUTCD LATEST EDITION.
- TYPE I (10 FT) ARROW PER CA-MUTCD LATEST EDITION
- TYPE IV (R) ARROW PER CA-MUTCD LATEST EDITION
- 3B-22(CA) FIGURE 3B-22 ACCESSIBLE PARKING SYMBOL, LEGEND AND RELATED MARKINGS

ABBREVIATIONS

R1-1	STOP SIGN
R3-5	LEFT (RIGHT) TURN ONLY SIGN
R7-8B	VAN ACCESSIBLE SIGN
R99C(CA)	ACCESSIBLE PARKING SIGN
R100B(CA)	TOW AWAY SIGN, SEE NOTE 2

NOTES:

1. ALL STRIPING, PAVEMENT MARKING, AND SIGNING SHALL CONFIRM TO THE LATEST EDITION OF THE CALIFORNIA MANUAL OF UNIFORM TRAFFIC CONTROL DEVICES.

N

0 10 20 40

SCALE: 1" = 20'

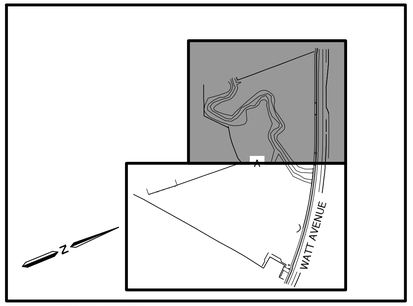

LOCATION MAP

1"=300'

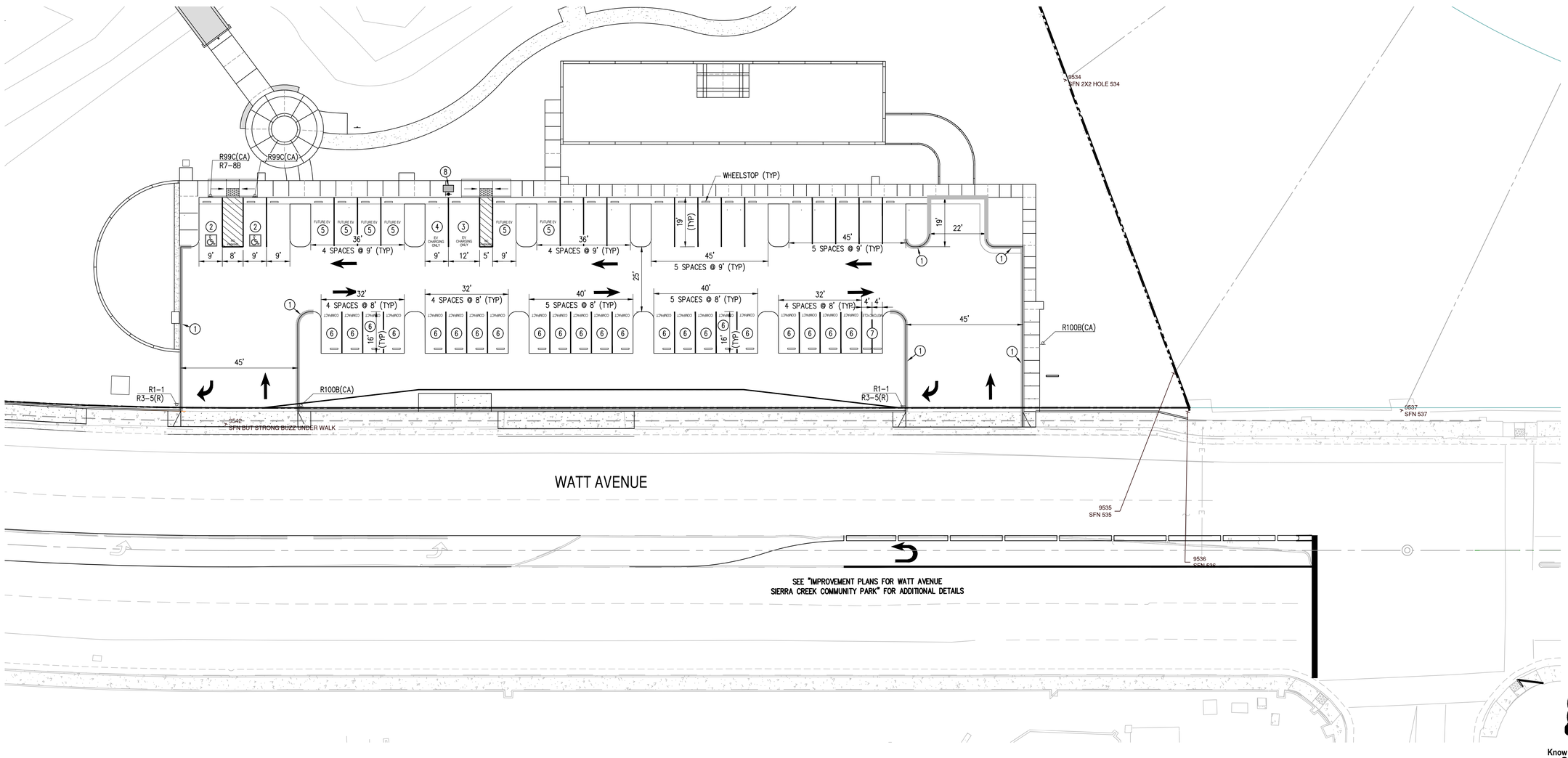

Know what's **below.**
Call before you dig.

Westwood
Westwood Professional Services, Inc.
8200 STONERIDGE MALL ROAD, SUITE 330
PLEASANTON, CA 94588
T: 925.223.8340
wwdesign.com

NO.	DESCRIPTION	DATE	BY	APP. DATE	APP.

ANTELOPE, CALIFORNIA

SIERRA CREEK COMMUNITY PARK
TRAFFIC SIGNING & STRIPING

DATE: 08/31/2026
DRAFTER: JJ
DESIGNER: ZW
CHECKED: RC
PROJECT NO. 41541

REGISTERED PROFESSIONAL ENGINEER ROBERT I. CRAIG 59425 CIVIL STATE OF CALIFORNIA

C4.1

####

Last Saved by: Czwernicki
Plot Date: Tue, 8/31/2026 11:46 AM
Drawing: N:_ODE\Pleasanton\41541 NRHPD Sierra Creek Park\Civil\ConstPlans\Onsite\41541-SS (CIVIL)

MATCHLINE "A" - SEE SHEET C5.2

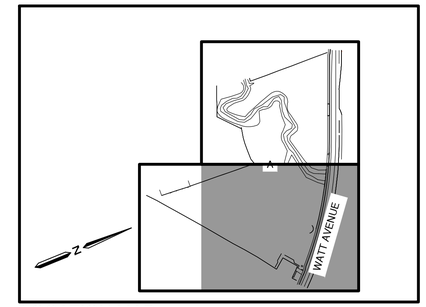

LOCATION MAP

1"=300'

LEGEND:

- PERVIOUS AREA
- LID MEASURE
- PAVEMENT AREA
- INTERCEPTOR TREES
- DMA BOUNDARY
- (1) VEGETATED SWALE SEE DETAIL A SHEET C5.2
- (2) STORMWATER PLANTER SEE DETAIL A SHEET C5.2
- (3) BUBBLE UP FIELD INLET, SEE DETAIL E SHEET C6.1
- (4) UNDER SIDEWALK DRAIN, SEE DETAIL A SHEET C6.1

DESCRIPTION	DMA 1	DMA 2	DMA 3	DMA 4
PAVEMENT AREA	18,853 SF	1,812 SF	11,008 SF	10,547 SF
PERVIOUS AREA	197,739 SF	44,853 SF	6,438 SF	4,542 SF
INTERCEPTOR TREES	125 TOTAL	44 TOTAL	20 TOTAL	15 TOTAL
LID MEASURE	DISCONNECTED PAVEMENT (2:1 MAX RATIO)	DISCONNECTED PAVEMENT (2:1 MAX RATIO)	727 SF (SWALE)	349 SF (PLANTER)

SCALE: 1" = 20'

Know what's below. Call before you dig.

Westwood
Westwood Professional Services, Inc.
8200 STONERIDGE MALL ROAD, SUITE 330
PLEASANTON, CA 94588
T: 925.223.8340
westwoodpro.com

NO.	DESCRIPTION	DATE	BY	APP. DATE	APP.

ANTELOPE, CALIFORNIA

SIERRA CREEK COMMUNITY PARK
POST-CONSTRUCTION STORMWATER QUALITY PLAN (PCSQP)

DATE: 08/31/2026
DRAFTER: JJ
DESIGNER: ZW
CHECKED: RC
PROJECT NO. 41541

REGISTERED PROFESSIONAL ENGINEER ROBERT T CHEN 59425 CIVIL STATE OF CALIFORNIA

C5.1

####

Last Saved by: Cravenrich
Plot Date: 8/31/2026 11:51 AM
Drawing: N:_ODE\Pleasanton\41541 NRHPD Sierra Creek Park\Civil\ConstPlans\Onsite\41541-PCSQP (CIVIL)

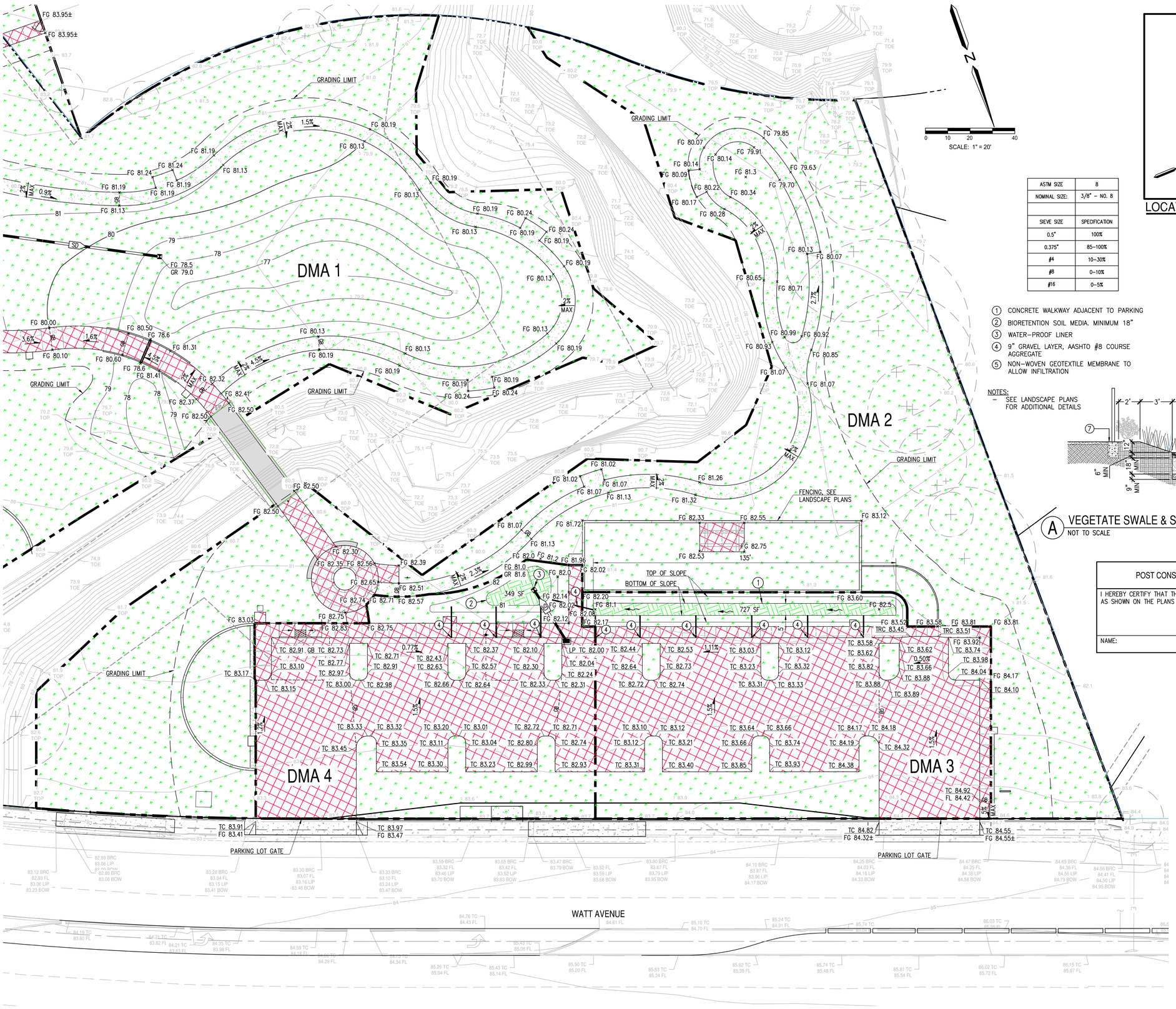

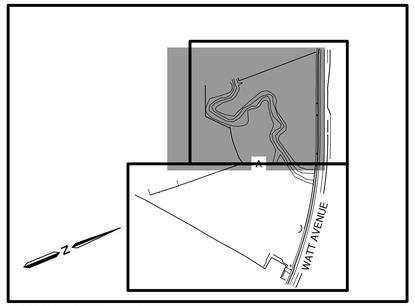

LOCATION MAP

1"=300'

ASTM SIZE	8
NOMINAL SIZE:	3/8" – NO. 8
SIEVE SIZE	SPECIFICATION
0.5"	100%
0.375"	85–100%
#4	10–30%
#8	0–10%
#16	0–5%

1. CONCRETE WALKWAY ADJACENT TO PARKING
2. BIORETENTION SOIL MEDIA. MINIMUM 18"
3. WATER–PROOF LINER
4. 9" GRAVEL LAYER, AASHTO #8 COURSE AGGREGATE
5. NON–WOVEN GEOTEXTILE MEMBRANE TO ALLOW INFILTRATION
6. UNCOMPACTED NATIVE SOIL
7. COMMUNITY GARDEN FENCE AND MOWCURB
8. FILTER FABRIC
9. SANDY LOAM TOP LAYER MINIMUM 6" DEEP

NOTES:
– SEE LANDSCAPE PLANS FOR ADDITIONAL DETAILS

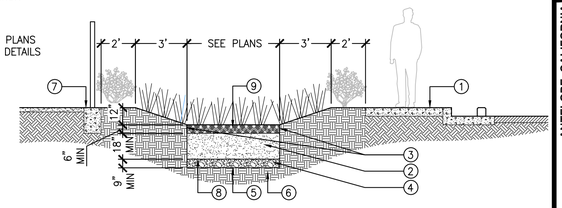

A VEGETATE SWALE & STORMWATER PLANTER SECTION
NOT TO SCALE

POST CONSTRUCTION CONTROL MEASURE COMPLIANCE

I HEREBY CERTIFY THAT THE POST CONSTRUCTION CONTROL MEASURES WERE CONSTRUCTED AS SHOWN ON THE PLANS APPROVED BY THE COUNTY OF SACRAMENTO.

NAME: TITLE: DATE:

LEGEND:

- PERVIOUS AREA
- LID MEASURE
- PAVEMENT AREA
- INTERCEPTOR TREES
- DMA BOUNDARY
- (1) VEGETATED SWALE SEE DETAIL A SHEET C5.2
- (2) STORMWATER PLANTER SEE DETAIL A SHEET C5.2
- (3) BUBBLE UP FIELD INLET, SEE DETAIL E SHEET C6.1
- (4) UNDER SIDEWALK DRAIN, SEE DETAIL A SHEET C6.1

811 Know what's below. Call before you dig.

Westwood
Westwood Professional Services, Inc.
8200 STONERIDGE MALL ROAD, SUITE 330
PLEASANTON, CA 94588
T: 925.223.8340
westwoodps.com

NO.	DESCRIPTION	DATE	BY	APP. DATE	APP.

ANTELOPE, CALIFORNIA

SIERRA CREEK COMMUNITY PARK
POST-CONSTRUCTION STORMWATER QUALITY PLAN (PCSQP)

DATE: 08/31/2026
DRAFTER: JJ
DESIGNER: ZW
CHECKED: RC
PROJECT NO. 41541

REGISTERED PROFESSIONAL ENGINEER ROBERT T CHEN 59425 CIVIL STATE OF CALIFORNIA

C5.2

####

Last Saved by: Czarnecki
Plot Date: 8/31/2026 11:51 AM
Drawing: N:_ODE\Pleasanton\41541 NRHPD Sierra Creek Park\Civil\ConstPlans\Onsite\41541-PCSQP (CIVIL)

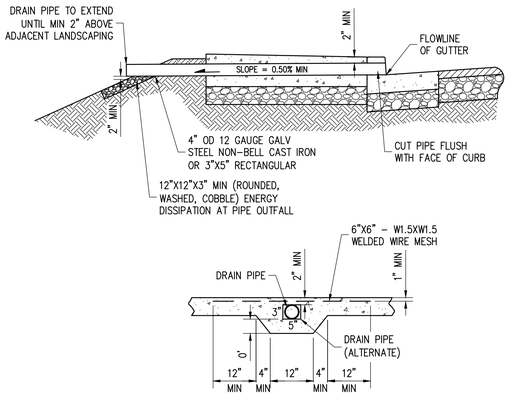

NOTES:
1. PROPERTY OWNER SHALL BE RESPONSIBLE FOR CLEANING AND MAINTAINING PIPE.

A UNDER SIDEWALK DRAIN
NOT TO SCALE

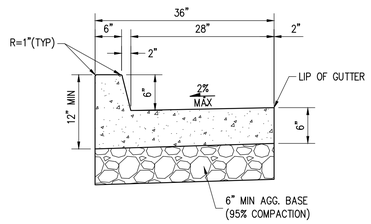

NOTES:
1. SEE COUNTY OF SACRAMENTO SECTION 27-3.01 OF STANDARD CONSTRUCTION SPECIFICATIONS FOR REQUIREMENT FOR EXPANSION JOINTS, WEAKENED PLANE JOINTS AND SCORE MARKS. $\frac{1}{4}$" RADIUS ON EXPOSED EDGES UNLESS NOTED OTHERWISE.

B MODIFIED VERTICAL CURB & GUTTER
NOT TO SCALE

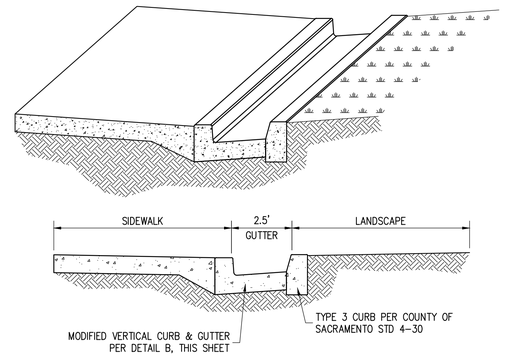

C FLOW THRU CURB
NOT TO SCALE

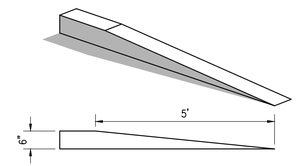

D CURB TRANSITION DETAIL
NOT TO SCALE

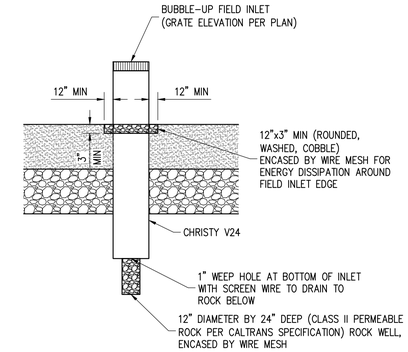

E BUBBLE-UP INLET
NOT TO SCALE

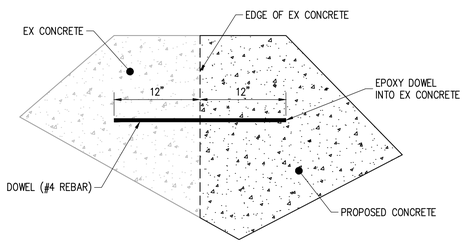

F DOWEL/CONCRETE CONFORMATION
NOT TO SCALE

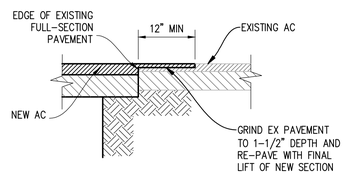

G LAP JOINT DETAIL
NOT TO SCALE

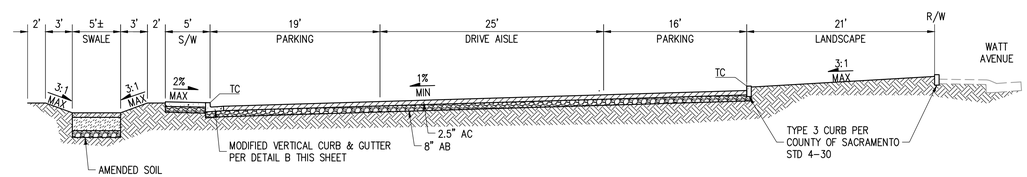

H TYPICAL PARKING LOT CROSS SECTION
NOT TO SCALE

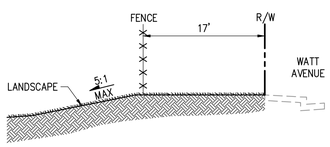

I SECTION I-I
NOT TO SCALE

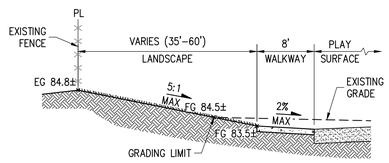

J SECTION J-J
NOT TO SCALE

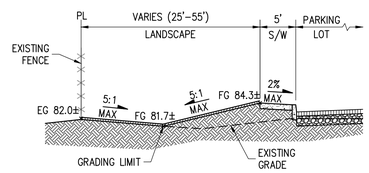

K SECTION K-K
NOT TO SCALE

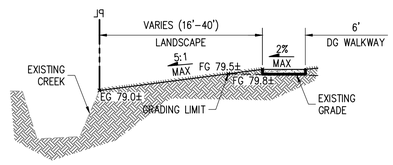

L SECTION L-L
NOT TO SCALE

Know what's **below.**
Call before you dig.

Westwood
Westwood Professional Services, Inc.
8200 STONERIDGE MALL ROAD, SUITE 330
PLEASANTON, CA 94588
T: 925.223.8340
westwoodps.com

NO.	DESCRIPTION	DATE	BY	APP. DATE	APP.

ANTELOPE, CALIFORNIA

SIERRA CREEK COMMUNITY PARK
DETAILS

DATE: 08/31/2026
DRAFTER: JJ
DESIGNER: ZW
CHECKED: RC
PROJECT NO. 41541

REGISTERED PROFESSIONAL ENGINEER ROBERT I CHAN 59425 CIVIL STATE OF CALIFORNIA

C6.1

####

Last Saved by: Czwernich
Plot Date/Time: 01/07/2026 11:46 AM
Drawing: N:_ODE\Pleasanton\41541 NRHPD Sierra Creek Park\Civil\ConstPlans\Orsle\41541-SS (CIVIL)

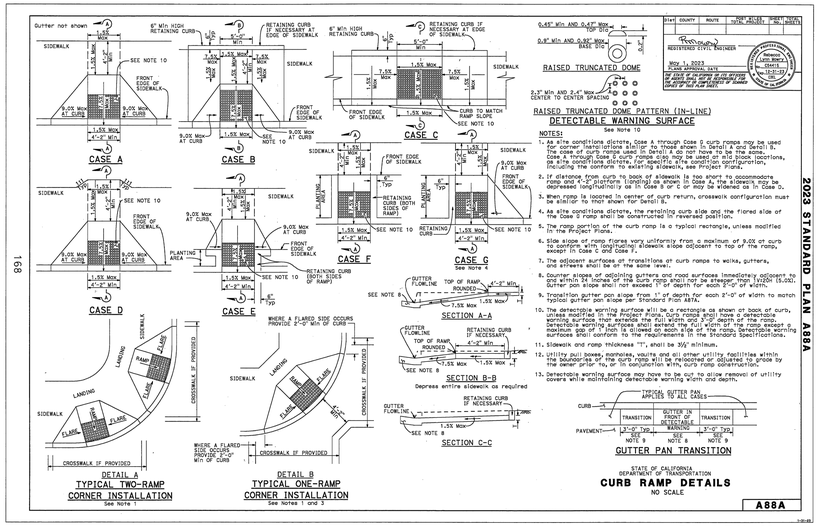

Return to Table of Contents

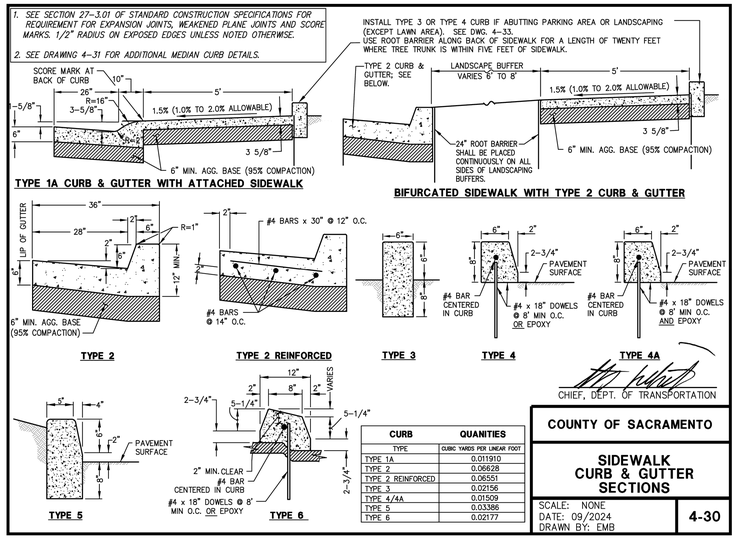

CURB	QUANITIES
TYPE	CUBIC YARDS PER LINEAR FOOT
TYPE 1A	0.011910
TYPE 2	0.06628
TYPE 2 REINFORCED	0.06551
TYPE 3	0.02156
TYPE 4/4A	0.01509
TYPE 5	0.03386
TYPE 6	0.02177

COUNTY OF SACRAMENTO

SIDEWALK CURB & GUTTER SECTIONS

SCALE: NONE
DATE: 09/2024
DRAWN BY: EMB

4-30

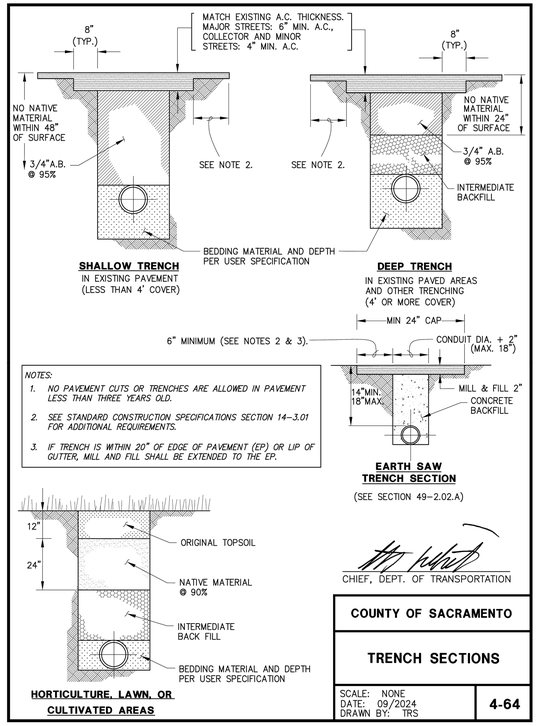

COUNTY OF SACRAMENTO

TRENCH SECTIONS

SCALE: NONE
DATE: 09/2024
DRAWN BY: TRS

4-64

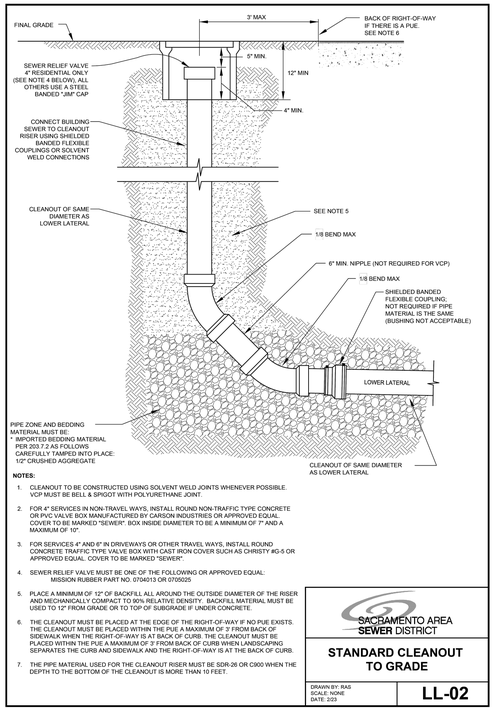

NOTES:

1. CLEANOUT TO BE CONSTRUCTED USING SOLVENT WELD JOINTS WHENEVER POSSIBLE. VCP MUST BE BELL & SPIGOT WITH POLYURETHANE JOINT.
2. FOR 4" SERVICES IN NON-TRAVEL WAYS, INSTALL ROUND NON-TRAFFIC TYPE CONCRETE OR PVC VALVE BOX MANUFACTURED BY CARSON INDUSTRIES OR APPROVED EQUAL. COVER TO BE MARKED "SEWER". BOX INSIDE DIAMETER TO BE A MINIMUM OF 7" AND A MAXIMUM OF 10".
3. FOR SERVICES 4" AND 6" IN DRIVEWAYS OR OTHER TRAVEL WAYS, INSTALL ROUND CONCRETE TRAFFIC TYPE VALVE BOX WITH CAST IRON COVER SUCH AS CHRISTY #G-5 OR APPROVED EQUAL. COVER TO BE MARKED "SEWER".
4. SEWER RELIEF VALVE MUST BE ONE OF THE FOLLOWING OR APPROVED EQUAL: MISSION RUBBER PART NO. 0704013 OR 0705025
5. PLACE A MINIMUM OF 12" OF BACKFILL ALL AROUND THE OUTSIDE DIAMETER OF THE RISER AND MECHANICALLY COMPACT TO 90% RELATIVE DENSITY. BACKFILL MATERIAL MUST BE USED TO 12" FROM GRADE OR TO TOP OF SUBGRADE IF UNDER CONCRETE.
6. THE CLEANOUT MUST BE PLACED AT THE EDGE OF THE RIGHT-OF-WAY IF NO PUE EXISTS. THE CLEANOUT MUST BE PLACED WITHIN THE PUE A MAXIMUM OF 3' FROM BACK OF SIDEWALK WHEN THE RIGHT-OF-WAY IS AT BACK OF CURB. THE CLEANOUT MUST BE PLACED WITHIN THE PUE A MAXIMUM OF 3' FROM BACK OF CURB WHEN LANDSCAPING SEPARATES THE CURB AND SIDEWALK AND THE RIGHT-OF-WAY IS AT THE BACK OF CURB.
7. THE PIPE MATERIAL USED FOR THE CLEANOUT RISER MUST BE SDR-26 OR C900 WHEN THE DEPTH TO THE BOTTOM OF THE CLEANOUT IS MORE THAN 10 FEET.

SACRAMENTO AREA SEWER DISTRICT

STANDARD CLEANOUT TO GRADE

DRAWN BY: RAS
SCALE: NONE
DATE: 2/23

LL-02

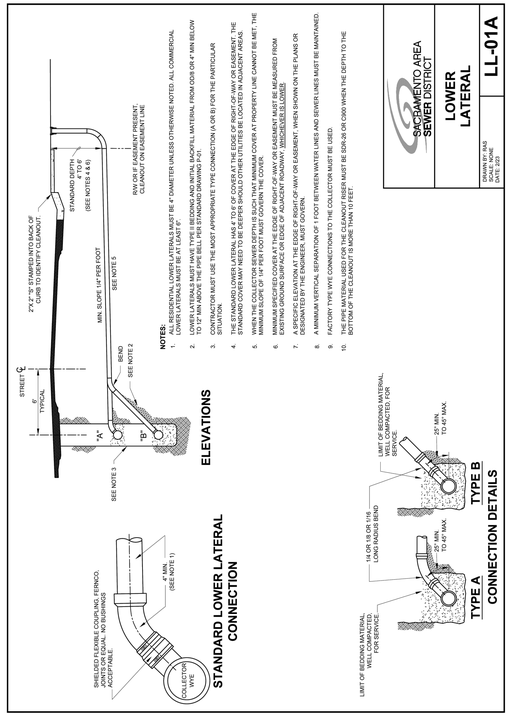

SACRAMENTO AREA SEWER DISTRICT

LOWER LATERAL

DRAWN BY: RAS
SCALE: NONE
DATE: 2/23

LL-01A

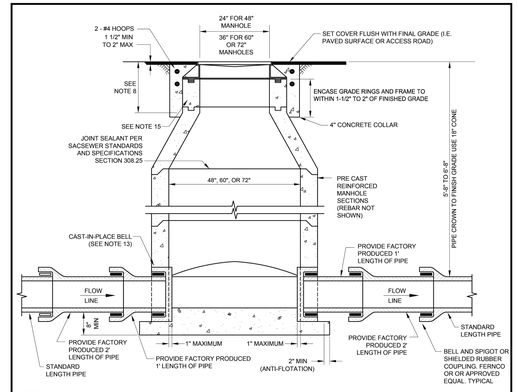

NOTES:

1. CLASS A ASTM C478 CONCRETE MUST BE USED FOR MANHOLE BASES.
2. SPRING LINE OF CAST-IN-PLACE BELL MUST STOP AT INSIDE FACE OF MANHOLE.
3. POURED IN PLACE MANHOLES ARE NOT ALLOWED.
4. JOINTS FOR THE BARREL SECTION WILL BE TONGUE AND GROOVE OR LAP JOINT. ALL LIFTING HOLES MUST BE SEALED WITH NON-SHRINK GROUT.
5. ALL MANHOLE BASES MUST BE PRECAST BASES AND BE PLACED ON 10" MIN. OF 3/4" CRUSHED ROCK PLACED OVER UNDISTURBED MATERIAL. CONNECTION OF THE PIPE TO THE MANHOLE MUST USE A CAST-IN-PLACE BELL. ALL MANHOLE BASES TO INCLUDE AN ANTI-FLOTATION RING PER STANDARD DRAWING MH-05.
6. ANY LOWER LATERAL ENTERING A MANHOLE MUST BE INSTALLED WITH THE INVERT ELEVATION OF THE LOWER LATERAL MATCHING THE CROWN ELEVATION OF THE EXIT SEWER EXCEPT WHEN AN INTERNAL DROP CONNECTION IS USED. FOR MANHOLES AT THE END OF A CUL-DE-SAC OR END OF LINE WITH NO EXTENSION THE INVERT OF ANY LOWER LATERAL MUST BE A MINIMUM OF ONE INCH ABOVE THE INVERT OF THE EXIT PIPE WITH AN INDIVIDUAL SADDLE WITH TRANSITION CHANNEL.
7. ECCENTRIC CONES REQUIRE APPROVAL FROM SACSEWER.
8. MAXIMUM THROAT DEPTH FOR NEW CONSTRUCTION IS 16 INCHES. MAXIMUM THROAT DEPTH FOR ASPHALTIC CONCRETE OVERLAYS IS 18 INCHES.
9. 5'-8" OR LESS MUST USE 18" CONES OR FLAT TOP.
10. PIPE MUST BE PLACED WITH THE BELLS UPSTREAM.
11. ALL SEWER MANHOLES MUST HAVE 24 HOUR ALL WEATHER ACCESS. (I.E. PAVED SURFACE OR ACCESS ROAD).
12. SEE DRAWING MH-05 / MH-06 FOR BASE DETAIL.
13. SANDED MANHOLE ADAPTER MANUFACTURED BY IPEX USA, LLC OR APPROVED EQUAL WITH CLAMP ON WATERSTOP GROUT RING FOR PVC.
14. MANHOLES MUST BE MANUFACTURED BY JENSEN PRECAST, OLDCASTLE INFRASTRUCTURE, OR RINKER UNLESS OTHERWISE APPROVED BY SACSEWER.
15. FOR EASEMENT AREAS OUTSIDE OF ROADWAYS AND VEHICLE TRAFFIC, CRETEX PRO-RING GRADE RINGS MAY BE USED IN LIEU OF CONCRETE GRADE RINGS.

SACRAMENTO AREA SEWER DISTRICT

STANDARD PRECAST 48", 60", OR 72" MANHOLES

DRAWN BY: RAS
SCALE: NONE
DATE: 5/23

MH-03

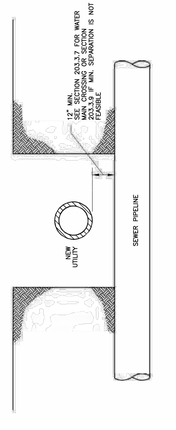

NOTES:

1. ALL SEWER PIPELINES ARE TO BE PROTECTED IN PLACE.
2. ANY NON UTILITY MUST HAVE A MINIMUM OF 12" CLEARANCE FROM ANY SEWER PIPELINE. ANY NON UTILITY CROSSING OVER SEWER PIPELINE MUST HAVE A COMPRESSIBLE MATERIAL (STYROFOAM OR EQUIVALENT) BETWEEN THE LINES.

SACRAMENTO AREA SEWER DISTRICT

UTILITY CROSSING

DRAWN BY: RAS
SCALE: NONE
DATE: 5/23

P-08

Westwood
Westwood Professional Services, Inc.
8200 STONERIDGE MALL ROAD, SUITE 300
PLEASANTON, CA 94588
T: 925.223.8340
westwoodps.com

NO.	DESCRIPTION	DATE	BY	APP.	APP. DATE

ANTELOPE, CALIFORNIA

SIERRA CREEK COMMUNITY PARK

DETAILS

DATE: 08/31/2026
DRAFTER: JJ
DESIGNER: ZW
CHECKED: RC
PROJECT NO. 41541

REGISTERED PROFESSIONAL ENGINEER ROBERT I CHEN 59425 CIVIL STATE OF CALIFORNIA

C6.2

####

811 Know what's below. Call before you dig.

List Saved by: Czwernicki
Last Updated: 8/31/2026 11:47 AM
Drawing: N:_ODE\Pleasanton\41541 NRHPD Sierra Creek Park\Civil\Plans\Onsite\41541-SS (CIVIL)

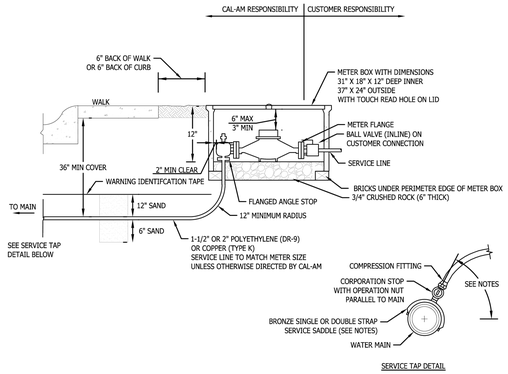

SERVICE TAP DETAIL

NOTES:
1. METER BOXES SHALL NOT BE LOCATED IN DRIVEWAYS, AND SHALL BE 2-FOOT MINIMUM OUTSIDE CURB RETURNS AND ACCESSIBLE WALKS. LOCATE NEW WATER METER BOX AS SHOWN ON DRAWING OR AS DIRECTED BY CAL-AM REPRESENTATIVE. TYPICAL LOCATION IS 6" BEHIND BACK OF SIDEWALK OR 6" BEHIND BACK OF CURB IF SIDEWALK IS NOT PROPOSED.
2. METER BOX SHALL BE LEVEL AND FLUSH WITH FINISHED GRADE.
3. CONTRACTOR TO PROVIDE A FLANGED METER SPACER :
   1-1/2" SERVICE 13" METER SPACER
   2" SERVICE 17-1/4" METER SPACER
4. CAL-AM WILL PROVIDE AND INSTALL METER.
5. WHEN REPLACING COMPOUND METERS, ANY BYPASS PIPING SHALL BE REMOVED AT CAL-AM DISCRETION.
6. INSTALL BRONZE DOUBLE STRAP SERVICE SADDLE ON ALL ACP AND DIP MAINS.
7. INSTALL BRONZE SINGLE STRAP SERVICE SADDLE ON ALL PVC MAINS.
8. NO GALVANIZED PIPING MATERIALS SHALL BE ALLOWED.
9. SERVICE SHALL BE INSTALLED AT 0 DEGREES (HORIZONTAL). SERVICE INSTALLATION AT 45 DEGREES UPON DISCRETION OF CAL-AM.
10. SEE PIPE TRENCH AND BACKFILL STANDARD DRAWING CAW-ND-W102.
11. SEE WARNING / IDENTIFICATION TAPE AND TRACER WIRE STANDARD DRAWING CAW-ND-W103.
12. SEE REDUCED PRESSURE (RP) PRINCIPLE BACKFLOW ASSEMBLY STANDARD DRAWING CAW-ND-W204.
14. SEE WATER SERVICE MINIMUM SEPARATION STANDARD DRAWING CAW-ND-W206.

SEE CAL-AM NORTHERN DIVISION SPECIFICATIONS FOR APPROVED MATERIALS LIST

CALIFORNIA AMERICAN WATER

COMMITTEE APPROVAL 04/12/2023

1.5-INCH AND 2-INCH SERVICE

CALIFORNIA AMERICAN WATER
NORTHERN DIVISION

STANDARD DRAWING NUMBER
CAW-ND-W202

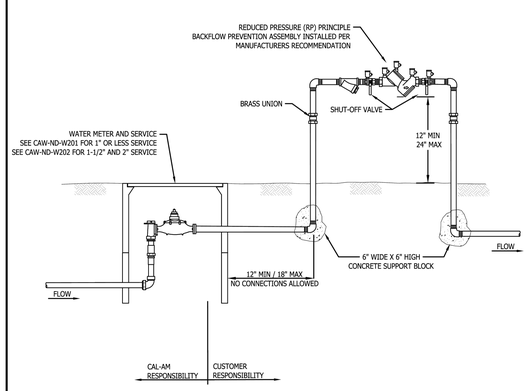

NOTES:
1. POINT OF SERVICE SHALL BE BACK OF METER.
2. BACKFLOW PREVENTION ASSEMBLIES SHALL BE INSTALLED ABOVE GROUND IN HORIZONTAL AND LEVEL POSITION. THE ASSEMBLY SHALL BE LOCATED ON THE CUSTOMER'S SIDE AND NO FURTHER THAN TWELVE (12) INCHES, WITH A MAXIMUM OF EIGHTEEN (18) INCHES, FROM THE POINT OF SERVICE OR THE METER, UNLESS OTHERWISE APPROVED BY CAL-AM.
3. REDUCED PRESSURE (RP) BACKFLOW PREVENTION ASSEMBLIES MUST BE CONNECTED AND TESTED PRIOR TO BEING PLACED INTO SERVICE.
4. LIST OF USC APPROVED BACKFLOW PREVENTION ASSEMBLIES AND CERTIFIED BACKFLOW PREVENTION ASSEMBLY TESTERS ARE AVAILABLE AT LOCAL CAL-AM OFFICE.
5. NO OUTLET, TAP, TEE OR CONNECTION BETWEEN THE WATER MAIN AND BACKFLOW PREVENTER IS ALLOWED.
6. ALL ABOVE GROUND PIPING, UNIONS, ELBOWS, AND NIPPLES SHALL BE SOLDERED OR THREADED BRASS.
7. CONCRETE PAD IS RECOMMENDED IF ASSEMBLY IS PLACED WITHIN A PROTECTIVE ENCLOSURE.
8. FREEZE PROTECTION IS RECOMMENDED IN LOCATIONS WITH FREEZING TEMPERATURES.
9. NO GALVANIZED PIPING MATERIALS SHALL BE ALLOWED.

SEE CAL-AM NORTHERN DIVISION SPECIFICATIONS FOR APPROVED MATERIALS LIST

CALIFORNIA AMERICAN WATER

COMMITTEE APPROVAL 09/28/2022

2-INCH AND LESS RP BACKFLOW PREVENTION DEVICE

CALIFORNIA AMERICAN WATER
NORTHERN DIVISION

STANDARD DRAWING NUMBER
CAW-ND-W204

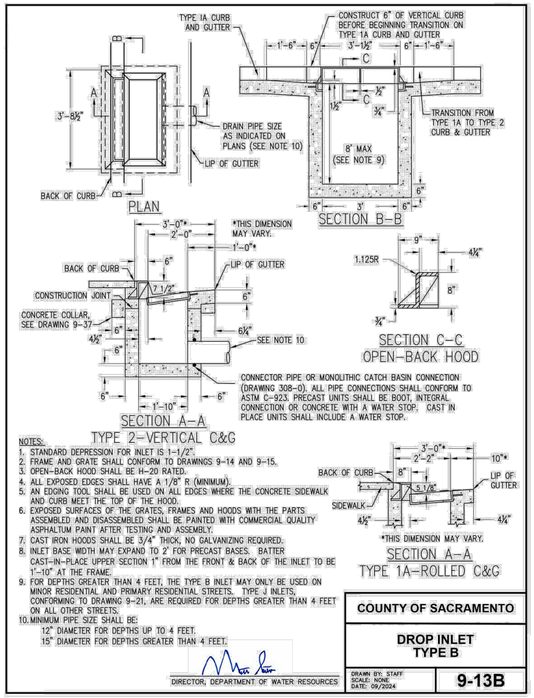

NOTES:
1. STANDARD DEPRESSION FOR INLET IS 1-1/2".
2. FRAME AND GRATE SHALL CONFORM TO DRAWINGS 9–14 AND 9–15.
3. OPEN–BACK HOOD SHALL BE H–20 RATED.
4. ALL EXPOSED EDGES SHALL HAVE A 1/8" R (MINIMUM).
5. AN EDGING TOOL SHALL BE USED ON ALL EDGES WHERE THE CONCRETE SIDEWALK AND CURB MEET THE TOP OF THE HOOD.
6. EXPOSED SURFACES OF THE GRATES, FRAMES AND HOODS WITH THE PARTS ASSEMBLED AND DISASSEMBLED SHALL BE PAINTED WITH COMMERCIAL QUALITY ASPHALTUM PAINT AFTER TESTING AND ASSEMBLY.
7. CAST IRON HOODS SHALL BE 3/4" THICK, NO GALVANIZING REQUIRED.
8. INLET BASE WIDTH MAY EXPAND TO 2' FOR PRECAST BASES. BATTER CAST–IN–PLACE UPPER SECTION 1" FROM THE FRONT & BACK OF THE INLET TO BE 1'–10" AT THE FRAME.
9. FOR DEPTHS GREATER THAN 4 FEET, THE TYPE B INLET MAY ONLY BE USED ON MINOR RESIDENTIAL AND PRIMARY RESIDENTIAL STREETS. TYPE J INLETS, CONFORMING TO DRAWING 9–21, ARE REQUIRED FOR DEPTHS GREATER THAN 4 FEET ON ALL OTHER STREETS.
10. MINIMUM PIPE SIZE SHALL BE:
    12" DIAMETER FOR DEPTHS UP TO 4 FEET.
    15" DIAMETER FOR DEPTHS GREATER THAN 4 FEET.

DIRECTOR, DEPARTMENT OF WATER RESOURCES

COUNTY OF SACRAMENTO

DROP INLET
TYPE B

DRAWN BY: STAFF
SCALE: NONE
DATE: 09/2024

9-13B

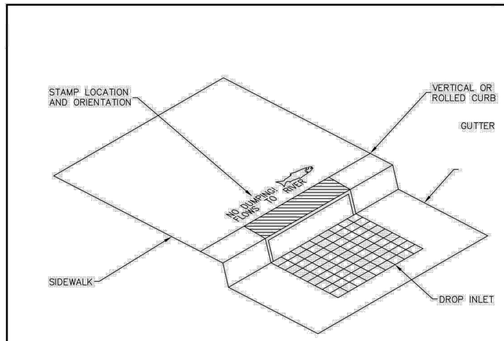

NOTES:
1. MESSAGE AND SYMBOL SHALL BE AS SHOWN ON SHEET 2 OR AS APPROVED BY THE AGENCY.
2. LETTERS SHALL BE 1.5 INCHES (38MM) IN HEIGHT. THE MESSAGE SHALL BE CENTERED ON THE BACK OF THE INLET. DIMENSIONS OF STORM DRAIN SHALL NOT EXCEED 12"X33".
3. CONCRETE SHALL BE STAMPED IN SUCH A WAY AS TO PROVIDE FOR A CLEAR AND LEGIBLE IMAGE. (APPROXIMATE DEPTH OF .25 INCH OR 6MM.)
4. ALL STAMPS SHALL BE APPROVED BY THE AGENCY BEFORE BEING USED.
5. FOR DROP INLETS AND CATCH BASINS WITH PRECAST TOPS, STEEL STORM DRAIN MARKERS MAY REPLACE THE CONCRETE STAMP. THE MARKER SHALL BE EMBOSSED STAINLESS STEEL AND INSTALLED WITH 4 RIVET FASTENER AND ADHESIVE. THE MARKERS SHALL BE AS SHOWN ON SHEET 2 OR AS APPROVED BY THE AGENCY.

DIRECTOR, DEPARTMENT OF WATER RESOURCES

COUNTY OF SACRAMENTO

STORMWATER QUALITY
DROP INLET & CATCH
BASIN CONCRETE STAMP

DRAWN BY: STAFF
SCALE: NONE
DATE: 09/2024

9-41
SHEET 1 OF 2

DIMENSIONS MAY VARY AMONG THE STAMP DESIGNS SHOWN BELOW, BUT SHALL NOT EXCEED THE MAXIMUM DIMENSIONS.

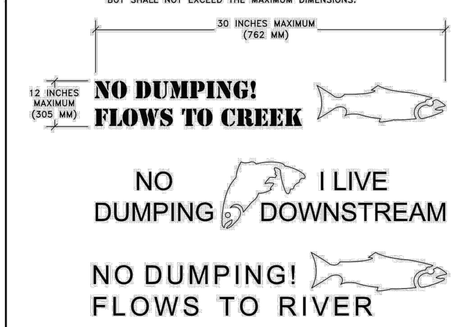

STAMP MESSAGES AND SYMBOLS

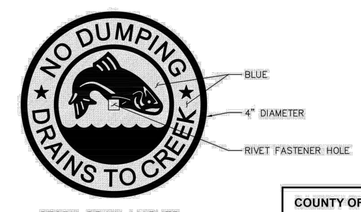

STORM DRAIN MARKER

DIRECTOR, DEPARTMENT OF WATER RESOURCES

COUNTY OF SACRAMENTO

STORMWATER QUALITY
DROP INLET & CATCH
BASIN CONCRETE STAMP

DRAWN BY: STAFF
SCALE: NONE
DATE: 09/2024

9-41
SHEET 2 OF 2

811
Know what's **below.**
Call before you dig.

Westwood
Westwood Professional Services, Inc.
8200 STONERIDGE MALL ROAD, SUITE 330
PLEASANTON, CA 94588
T: 925.223.8340
www.westwoodps.com

NO.	DESCRIPTION	DATE	BY	APP. DATE	APP.

ANTELOPE, CALIFORNIA

SIERRA CREEK COMMUNITY PARK
DETAILS

DATE: 08/31/2026
DRAFTER: JJ
DESIGNER: ZW
CHECKED: RC
PROJECT NO.
41541

REGISTERED PROFESSIONAL ENGINEER
ROBERT I. CREAR
59425
CIVIL
STATE OF CALIFORNIA

C6.3

####

Last Saved by: Czwernich
Plot Scale: 1:1 Plot Date/Time: 8/31/2026 11:48 AM
Drawing: N:_CDE\Pleasanton\41541 NRHPD Sierra Creek Park\Civil\ConstPlans\Onsite\41541-SS (CIVIL)

EROSION CONTROL NOTES:

1. ALL EROSION AND SEDIMENT CONTROL MEASURES SHALL BE CONSTRUCTED AND MAINTAINED IN ACCORDANCE WITH THE CURRENT MEASURES SHALL BE CONSTRUCTED AND MAINTAINED IN ACCORDANCE WITH THE CURRENT EDITION OF THE COUNTY OF SACRAMENTO IMPROVEMENT STANDARDS.

2. EROSION CONTROL BMPs SHALL BE INSTALLED AND MAINTAINED DURING THE WET SEASON (OCTOBER 1 THROUGH APRIL 30). SEDIMENT CONTROL BMPs SHALL BE INSTALLED AND MAINTAINED YEAR–ROUND.

3. ALL DRAINAGE INLETS IMMEDIATELY DOWNSTREAM OF THE WORK AREAS AND WITHIN THE WORK AREAS SHALL BE PROTECTED WITH SEDIMENT CONTROL YEAR–ROUND. SEDIMENT CONTROL PROTECTION SHALL BE REMOVED FROM THE DRAINAGE INLETS UPON THE COUNTY'S ACCEPTANCE OF PUBLIC IMPROVEMENTS.

4. ALL STABILIZED CONSTRUCTION ACCESS LOCATIONS SHALL BE CONSTRUCTED PER STANDARD DRAWING 11–1 WHERE CONSTRUCTION TRAFFIC ENTERS OR LEAVES PAVED AREAS. THE STABILIZED ACCESS SHALL BE MAINTAINED YEAR–ROUND UNTIL THE COMPLETION OF CONSTRUCTION.

5. ALL AREAS DISTURBED DURING CONSTRUCTION BY GRADING, TRENCHING, OR OTHER ACTIVES, SHALL BE PROTECTED FROM EROSION DURING THE WET SEASON (OCTOBER 1 THROUGH APRIL 30). HYDROSEED, IF UTILIZED, MUST BE PLACED BY SEPTEMBER 15. HYDROSEED PLACED DURING THE WET SEASON SHALL USE A SECONDARY EROSION PROTECTION METHOD.

6. SENSITIVE AREAS AND AREAS WHERE EXISTING VEGETATION BEING PRESERVED SHALL BE PRESERVED SHALL BE PROTECTED WITH CONSTRUCTION FENCING. SEDIMENT CONTROL BMPs SHALL BE INSTALLED WHERE ACTIVE CONSTRUCTION AREAS DRAIN INTO SENSITIVE OR PRESERVED VEGETATION AREAS.

7. SEDIMENT CONTROL BMPs SHALL BE PLACED ALONG THE PROJECT PERIMETER WHERE DRAINAGE LEAVES THE PROJECT. SEDIMENT CONTROL BMPs SHALL BE MAINTAINED YEAR–ROUND UNTIL THE CONSTRUCTION IS COMPLETE OR THE DRAINAGE PATTERN HAS BEEN CHANGED AND NO LONGER LEAVES THE SITE.

8. EROSION AND SEDIMENT CONTROL MEASURES FOR THE PROJECT SHOULD ALWAYS BE IN SUBSTANTIAL COMPLIANCE WITH THE STORMWATER POLLUTION PREVENTION PLAN (SWPPP) PREPARED FOR THE PROJECT IN ACCORDANCE WITH THE STATE OF CALIFORNIA GENERAL CONSTRUCTION PERMIT. THIS PERMIT REQUIRES THAT THE SWPPP BE KEPT UP TO DATE TO REFLECT THE CHANGING SITE CONDITIONS AND THAT THE SWPPP BE ALWAYS AVAILABLE ON–SITE FOR REVIEW BY STATE INSPECTORS.

9. EFFECTIVE EROSION CONTROL BMPs SHALL BE IN PLACE BEFORE ANY STORM EVENTS.

10. EROSION AND SEDIMENT CONTROL MEASURES SHALL BE EFFECTIVE FOR THE DURATION OF THE CONSTRUCTION ACTIVITY.

11. NO STORM RUNOFF WATER SHALL BE ALLOWED TO DRAIN DIRECTLY INTO THE EXISTING UNDERGROUND STORM SYSTEM BEFORE THE ONSITE STORM DRAIN SYSTEM IS INSTALLED.

12. AS SOON AS IS PRACTICAL AFTER THE NEW ONSITE STORM SYSTEM IS INSTALLED, THE CATCH BASINS SHALL BE INSTALLED AND DRAIN INLET PROTECTION BMPS SHALL BE INSTALLED.

13. SHOULD THE PROPOSED ONSITE STORM SYSTEM NOT BE INSTALLED BY OCTOBER 1ST, TEMPORARY SEDIMENT BASINS SHALL BE CONSTRUCTED AROUND THE OPENINGS OF ANY EXISTING STORM PIPES THAT DRAIN THE SITE, PER CASQA BMPS AND STANDARDS OR PER A SPECIAL DETAIL SHOWN ON THE PLAN.

14. THE NAME, ADDRESS AND 24–HOUR TELEPHONE NUMBER OF THE PERSON RESPONSIBLE FOR IMPLEMENTATION OF THE EROSION AND SEDIMENTATION CONTROL PLAN SHALL BE PROVIDED TO THE CITY PRIOR TO BEGINNING CONSTRUCTION.

15. INSTALL AND MAINTAIN STABILIZED SITE EXITS SO THAT TRACK OUT DOES NOT OCCUR. THE SITE EXIT TRACK OUT CONTROLS MUST BE INSTALLED AND MAINTAINED PER THE CASQA STORMWATER BMP HANDBOOK TC–1 SPECIFICATION. PROPERLY GRADE THE ACCESS AREA TO PREVENT RUNOFF AND DESIGN IT TO SUPPORT THE HEAVIEST VEHICLES IN USE. OTHER MEASURES TO PREVENT TRACKING ONTO ROADWAYS MAY BE USED IF APPROVED BY THE CITY. THIS DOES NOT NEED TO BE DONE AT DRIVEWAYS, WHICH WILL BE CLOSED BY IMMOVABLE BARRICADES DURING CONSTRUCTION.

16. ALL EROSION AND SEDIMENTATION CONTROL MEASURES SHALL BE MAINTAINED UNTIL DISTURBED AREAS ARE STABILIZED. CHANGES TO THE ESCP SHALL BE MADE TO MEET FIELD CONDITIONS, BUT ONLY WITH THE APPROVAL OF OR AT THE DIRECTION OF THE CITY ENGINEER.

17. ALL SIDEWALK AND PAVED AREAS OUTSIDE OF THE CONSTRUCTION BOUNDARY SHALL BE KEPT CLEAR OF EARTH MATERIAL AND DEBRIS. THE CONSTRUCTION SITE SHALL BE MAINTAINED SO AS TO MINIMIZE SEDIMENT LADEN RUNOFF FROM ENTERING ANY STORM DRAINAGE SYSTEM.

18. THE EROSION AND SEDIMENTATION CONTROL PLAN COVERS ONLY THE FIRST WINTER DURING WHICH CONSTRUCTION IS TO TAKE PLACE. PLANS ARE TO BE RESUBMITTED PRIOR TO SEPTEMBER 1 OF EACH SUBSEQUENT YEAR UNTIL THE CITY ACCEPTS THE SITE IMPROVEMENTS.

19. IT IS THE RESPONSIBILITY OF THE CONTRACTOR TO INSPECT AND REPAIR ALL EROSION CONTROL FACILITIES AT THE END OF EACH WORK DAY DURING THE RAINY SEASON.

20. IT IS THE RESPONSIBILITY OF THE CONTRACTOR TO CLEAN OUT SEDIMENT BASINS WHENEVER THE LEVEL OF SEDIMENT REACHES L/2 OF THE DESIGN VOLUME.

21. IT IS THE RESPONSIBILITY OF THE CONTRACTOR TO PROTECT TEMPORARY BORROW AREAS AND/OR STOCKPILES AS SPECIFIED IN CASQA WM–3.

22. THE CLEANING OF PAVED STREETS, DURING AND AT THE COMPLETION OF CONSTRUCTION, SHALL BE PERFORMED WITH MECHANICAL SWEEPERS. THE USE OF HOSES OR WATER TRUCKS TO "WASH DOWN" THE STREET IS PROHIBITED UNLESS THE DRAINS HAVE BEEN PLUGGED AND THE WATER IS CAPTURED AND PROPERLY DISPOSED.

23. THE ESCP AND/OR SWPPP, DETAILS, NOTES AND CALCULATIONS IF REQUIRED, MUST BE A PART OF THE PLAN CHECK SUBMITTAL PACKAGE FOR EITHER GRADING PERMIT ONLY OR FINAL SITE APPROVAL. THE DESIGN ENGINEER PRIOR TO PLAN PREPARATION SHOULD CONSULT THE CITY ENGINEER IF THE NEED FOR A SEPARATE PLAN IS IN DOUBT.

ADDITIONAL EROSION CONTROL NOTES:

1. THESE PLANS DEPICT APPROPRIATE MEASURES TO CONTROL EROSION ON THE SITE TO BE GRADED AS SHOWN ON THE PLANS ENTITLED, "SIERRA CREEK COMMUNITY PARK PLANS".

2. A BUFFER ADJACENT TO THE EXISTING CREEK A MINIMUM OF 20 FEET WIDE DISALLOWING STOCKPILING OR STAGING.

3. A LOG OF CORRECTIVE CHANGES SHOULD BE INCLUDED AND MAINTAINED AT THE SITE.

4. A CONSTRUCTION ENTRANCE SHALL BE INSTALLED PRIOR TO COMMENCEMENT OF GRADING. THE LOCATION OF THE ENTRANCE IS SHOWN AND SHOULD BE ADJUSTED BASE ON THE ROUTE OF CONSTRUCTION TRAFFIC ENTERING THE SITE. ALL CONSTRUCTION TRAFFIC ENTERING THE PAVED ROAD MUST CROSS THE CONSTRUCTION ENTRANCE.

5. ALL GRADED SLOPES SHALL BE SPRAY WITH HYDROSEED MULCH, INSTALL STRAW WATTLES AT TOP AND TOE OF SLOPE WHERE SHOWN ON THE EROSION CONTROL PLAN.

6. WHEN TEMPORARY STRUCTURES HAVE SERVED THEIR INTENDED PURPOSE AND THE CONTRIBUTING DRAINAGE AREA HAS BEEN PROPERLY STABILIZED, THE EMBANKMENT AND RESULTING SEDIMENT DEPOSITS ARE TO BE LEVELED OR OTHERWISE DISPOSED OF BY THE CONTRACTOR AS RECOMMENDED BY THE GEOTECHNICAL ENGINEER.

7. GRADED AREAS MUST DRAIN AWAY FROM THE FACE OF SLOPES AT THE CONCLUSION OF EACH WORKING DAY.

8. HYDROSEEDED AREAS SHALL BE REPAIRED, RESEEDED, AND MULCHED AS SOON AS POSSIBLE AFTER ANY DAMAGE.

9. TEMPORARY HYDROSEEDING SPECIFICATIONS: – ALL TEMPORARY SLOPES WILL BE SEEDED AT THE RATES SPECIFIED BELOW.

ITEM	LB/ACRE
"BLANDO" BROME	30
ANNUAL RYEGRASS	20
BARLEY	150

10. THE INTERIM EROSION CONTROL MEASURES DURING NORMAL GRADING OPERATIONS SHALL CONSIST OF INSTALLING THE FOLLOWING MEASURES AT LOCATIONS SHOWN ON THE EROSION CONTROL PLAN:
    - CONSTRUCTION ENTRANCE PER DETAIL ON THIS SHEET
    - PERIMETER SILT FENCING OR STRAW WATTLE PER DETAIL ON THIS SHEET
    - HYDROSEEDING PER SPECIFICATIONS ON THIS SHEET
    - STORM DRAIN INLET PROTECTION
    - CONCRETE WASH AREA
    - CONSTRUCTION STAGING AREA.

14. ADDITIONAL MATERIALS FOR IMPLEMENTATION OF EROSION AND SEDIMENTATION CONTROL MEASURES SHALL BE STORED ON SITE.

15. ALL DISTURBED SOIL, INCLUDING FINISHED LOTS, TO BE PROTECTED WITH EROSION CONTROL (e.g. HYDROSEED, BONDED FIBRE MATRIX, ETC.) MEASURES IF INACTIVE FOR MORE THAN 14 DAYS.

16. HAZARDOUS MATERIALS TO BE PROPERLY STORED IN ELEVATED, COVERED, WATERTIGHT CONTAINERS.

17. CONTRACTOR TO GRADE SWALE IN THE STREET AND DIRECT THE SWALE TO THE LOW SPOT IN THE OUTFALL.

18. WHEN THE STORM DRAIN LINES ARE INSTALLED, CONTRACTOR IS TO PROVIDE INLET PROTECTION.

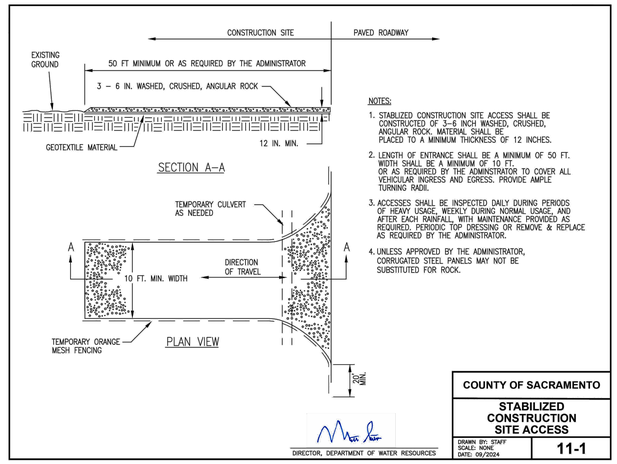

CONSTRUCTION ENTRANCE DETAIL
NOT TO SCALE

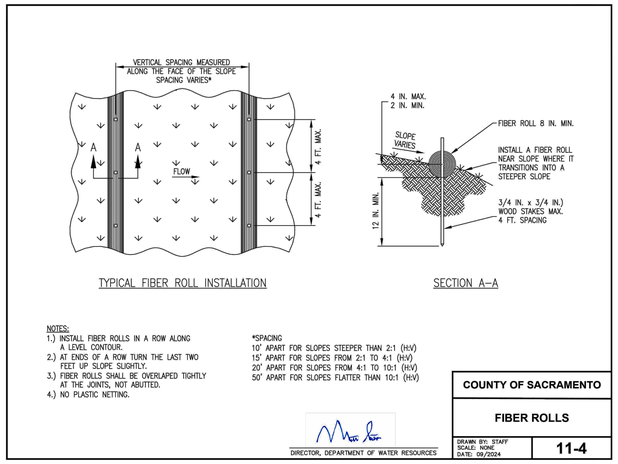

FIBER ROLLS DETAIL
NOT TO SCALE

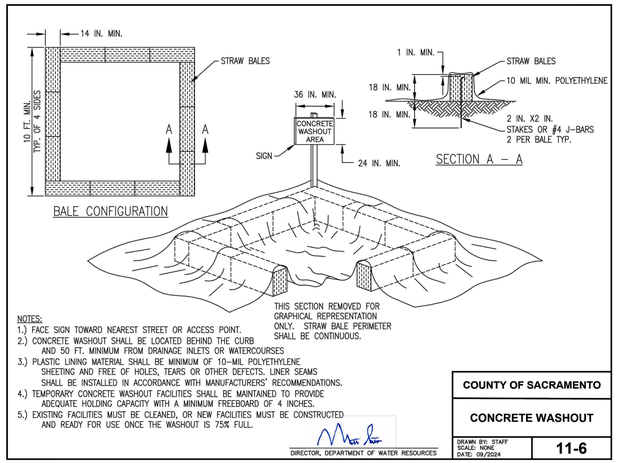

CONCRETE WASHOUT DETAIL
NOT TO SCALE

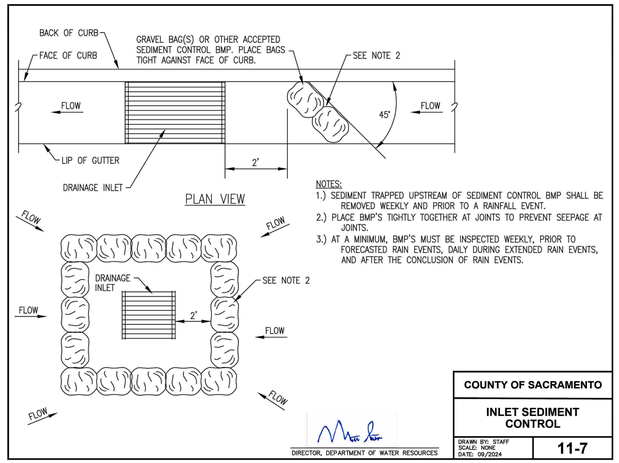

INLET PROTECTION DETAIL
NOT TO SCALE

BMP INSTALLATION SCHEDULE

PHASE OF CONSTRUCTION	EROSION & SEDIMENT CONTROL MEASURES															
	WET SEASON					WET AND DRY SEASON										
	HYDROSEEDING	STRAW MULCHES & TACIFIER	SOIL BINDERS	PRESERVATION OF EXISTING VEGETATION	BLANKETS, MATS & GEOTEXTILES	FIBER ROLLS	DUST CONTROL	OUTLET PROTECTION	SILT FENCING	SAND/GRAVEL BAD BARRIERS	STORM DRAIN INLET PROTECTION	SEDIMENT TRAP	DEWATERING	STABILIZED CONSTRUCTION ENTRANCE	MATERIAL WASTE DISPOSAL LOCATION	CONCRETE WASHOUT
PRE–GRADING				X		X	X			X	X	X		X	X	
CUT & FILL ACTIVITIES	X	X	X		X	X	X			X	X	X		X	X	
UNDERGROUND WORK						X	X			X	X	X		X	X	X
STORM DRAIN IMPROVEMENTS						X	X	X		X	X	X		X	X	X
CURB & GUTTER							X			X	X	X		X	X	X
STREET IMPROVEMENTS							X			X	X				X	X
PAVE OUT							X			X	X	X		X	X	X
POST GRADING	X		X			X	X			X	X	X		X	X	X

Westwood
Westwood Professional Services, Inc.
8200 STONERIDGE MALL ROAD, SUITE 300
PLEASANTON, CA 94588
T: 925.223.8340
westwoodps.com

NO.	DESCRIPTION	DATE	BY	APP. DATE	APP.

ANTELOPE, CALIFORNIA

SIERRA CREEK COMMUNITY PARK
EROSION CONTROL PLAN

DATE: 08/31/2026
DRAFTER: JJ
DESIGNER: ZW
CHECKED: RC
PROJECT NO. 41541

REGISTERED PROFESSIONAL ENGINEER ROBERT I. CREE 59425 CIVIL STATE OF CALIFORNIA

EC1.1

####

811 Know what's below. Call before you dig.

Last Saved by: Czeremcin
Plot Scale: 1:1 Plot Date: 8/31/2026 11:53 AM
Drawing: N:_CD\E\Pleasanton\41541 NRHPD Sierra Creek Park\Civil\Const\Plans\Onsite\41541-EC

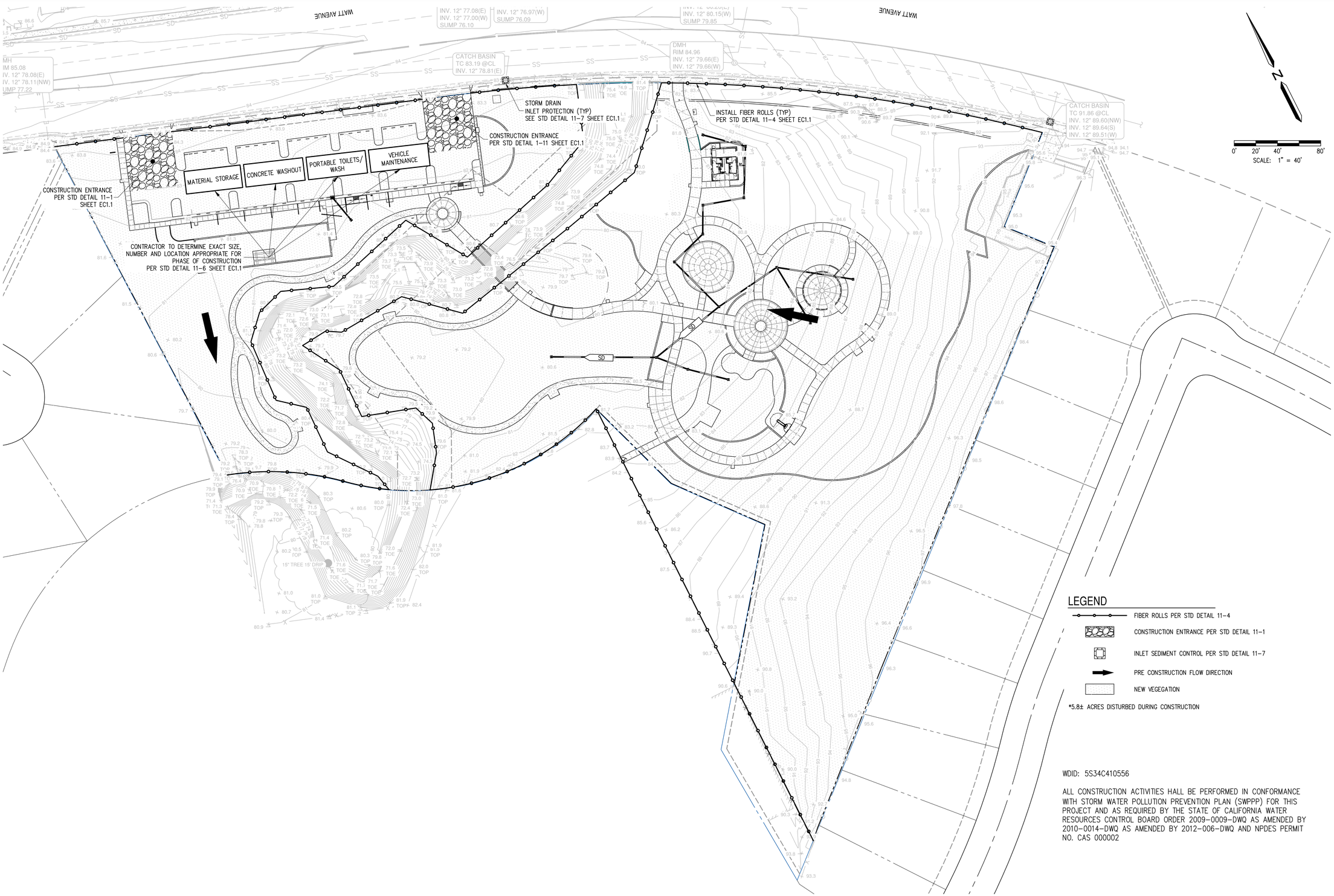

LEGEND

- FIBER ROLLS PER STD DETAIL 11-4
- CONSTRUCTION ENTRANCE PER STD DETAIL 11-1
- INLET SEDIMENT CONTROL PER STD DETAIL 11-7
- PRE CONSTRUCTION FLOW DIRECTION
- NEW VEGEGATION

*5.8± ACRES DISTURBED DURING CONSTRUCTION

WDID: 5S34C410556

ALL CONSTRUCTION ACTIVITIES HALL BE PERFORMED IN CONFORMANCE WITH STORM WATER POLLUTION PREVENTION PLAN (SWPPP) FOR THIS PROJECT AND AS REQUIRED BY THE STATE OF CALIFORNIA WATER RESOURCES CONTROL BOARD ORDER 2009-0009-DWQ AS AMENDED BY 2010-0014-DWQ AS AMENDED BY 2012-006-DWQ AND NPDES PERMIT NO. CAS 000002

811 Know what's below. Call before you dig.

Westwood
Westwood Professional Services, Inc.
8200 STONERIDGE MALL ROAD, SUITE 330
PLEASANTON, CA 94588
T: 925.223.8340
westwoodps.com

NO.	DESCRIPTION	DATE	BY	APP. DATE	APP.

ANTELOPE, CALIFORNIA

SIERRA CREEK COMMUNITY PARK
EROSION CONTROL PLAN

DATE: 08/31/2026
DRAFTER: JJ
DESIGNER: ZW
CHECKED: RC
PROJECT NO. 41541

REGISTERED PROFESSIONAL ENGINEER ROBERT I CHEW 59425 CIVIL STATE OF CALIFORNIA

EC1.2

####

Last Saved by: Czwernich
Plot Date/Time: 8/31/2026 11:53 AM
Drawing: N:_ODE\Pleasanton\41541 NRHPD Sierra Creek Park\Civil\ConstPlans\Onsite\41541-EC

SURVEY LEGEND

GENERAL

- WOOD POST
- CONTOUR WITH LABEL (82)
- CONTROL POINT
- ELEVATION W/ DESCRIPTION (82.65 EP)
- NATURAL GROUND SPOT ELEVATION (82.6)
- SIGN
- TREES

UTILITIES

- BACKFLOW PREVENTER
- BOX
- CATCH BASIN/CURB INLET
- CLEANOUT
- DRAIN INLET
- ELECTROLIER (AREA, STREET)
- GROUND
- MAINTENANCE HOLE
- METER
- PEDESTAL
- POLE
- VALVE

BOUNDARY LINES

- ADJACENT PARCEL LINE
- CENTER LINE
- EASEMENT LINE
- PROPERTY LINE
- RIGHT OF WAY LINE
- SECTION LINE
- TIE LINE

HARDSCAPE LINES

- BACK OF CURB
- FACE OF CURB
- FLOWLINE
- LIP OF GUTTER
- SIDEWALK/CONCRETE

MISCELLANEOUS LINES

- BUILDING OUTLINE
- FENCE, CHAIN-LINK
- FENCE, WOOD
- WALL

UTILITY LINES

- ELECTRIC
- STORM DRAIN
- SANITARY SEWER
- WATER

SURVEY ABBREVIATIONS

AC	ASPHALT CONCRETE
BD	BOLLARD
BLDG	BUILDING
BRC	BACK OF ROLLED CURB
BWL	BROKEN WHITE LINE (STRIPING)
CONC	CONCRETE
D	TREE DRIP LINE CANOPY
DI	DRAIN INLET
E,ELEC	ELECTRIC (UTILITY)
EP	EDGE OF PAVEMENT
FCL	FENCE, CHAIN LINK
FL	FLOWLINE
FW	FENCE, WOOD
GB	GRADE BREAK
INV	INVERT ELEVATION (UTILITY)
IRR	IRRIGATION (UTILITY)
L	STREET LIGHTING (UTILITY)
LIP	LIP OF GUTTER
M	METER (UTILITY)
MH	MAINTENANCE HOLE (UTILITY)
SD	STORM DRAIN
SS	SANITARY SEWER
SWL	SOLID WHITE LINE (STRIPING)
T	TREE TRUNK SIZE
TC	TOP OF CURB
TOE	TOE OF BANK
TOP	TOP OF BANK
USA	UNDERGROUND SERVICE ALERT
V	VALVE (UTILITY)
W	WATER
WR	WALL, RETAINING
WOOD TYP.	4"X4"X2' WOOD POST

SURVEY CONTROL

HORIZONTAL DATUM
NORTH AMERICAN DATUM OF 1983 (NAD83).

COORDINATE SYSTEM
COORDINATES SHOWN HEREON ARE BASED ON THE CALIFORNIA COORDINATE SYSTEM OF 1983 (CCS83), ZONE II.

VERTICAL DATUM
NORTH AMERICAN VERTICAL DATUM OF 1988 (NAVD88).

PROJECT BENCHMARK
FD 2" BRASS DISK STAMPED "SACRAMENTO COUNTY DEPT. OF PUBLIC WORKS 7-61" LOCATED ATOP NORTHEAST ABUTMENT ON THE NORTH SIDE OF WATT AVE., APPROX. 0.4 MI. NORTH OF ANTELOPE RD., APPROX. 0.2 MI NORTH OF BLACKFOOT WAY, APPROX. 0.5 MI. SOUTH OF ELVERTA RD. PER SACRAMENTO COUNTY BENCHMARK LIST.
ELEVATION = 86.43 FEET (NAVD88)

CONTROL POINT TABLE

POINT	NORTHING	EASTING	DESCRIPTION
15000	2020719.44	6736981.66	FD BM 7-61 86.43
15001	2020230.28	6736885.32	SET IP
15002	2020652.09	6736844.75	SET IP
15003	2020685.46	6736937.35	SET MAG IN MEDIAN
15005	2020822.36	6736574.57	SET MAG MEDIAN
15006	2020454.34	6737280.88	SET MAG SHINER

SURVEY NOTES:

1. THE FIELD WORK FOR THIS SURVEY WAS CONDUCTED IN OCTOBER 2022 AND NOVEMBER 2024.
2. NO ATTEMPT WAS MADE TO IDENTIFY THE NATURE OF USE OF UNDERLYING LAND SHOWN HEREON. ANY POTENTIAL PAST USES, INCLUDING THOSE WHICH MAY HAVE RESULTED IN SIGNIFICANT ENVIRONMENTAL OR CULTURAL IMPACTS, WERE NOT ASSESSED BY THIS SURVEY.
3. PRIOR TO COMMENCEMENT OF ANY CONSTRUCTION ON THIS SITE, IT IS ADVISED THAT ALL INVOLVED PARTIES REVIEW SECTION 8771 AND SECTION 8725 OF THE CALIFORNIA BUSINESS AND PROFESSIONS CODE, AND SECTION 605 OF THE CALIFORNIA PENAL CODE TO ENSURE THAT MONUMENT CONSERVATION HAS BEEN PROPERLY ADDRESSED.
4. NOTHING ON THIS SURVEY SHALL BE INTERPRETED IN A MANNER CONTRARY TO THESE STATEMENTS.
5. PHYSICAL ITEMS SHOWN ON THIS SURVEY ARE LIMITED TO THOSE SURFACE-VISIBLE STRUCTURES, FACILITIES, AND FEATURES OBSERVED AT THE TIME OF THE FIELD SURVEY. SUBSURFACE OBJECTS, IF ANY, WERE NOT LOCATED BY THIS SURVEY.
6. BOUNDARY SURVEY INFORMATION SHOWN HEREON IS BASED ON A FIELD SURVEY AND RESEARCH OF PUBLICLY AVAILABLE RECORDS AT THE TIME OF THE SURVEY. NO TITLE REPORT WAS PROVIDED OR OBTAINED.

CALL BEFORE YOU DIG
1-800-227-2600

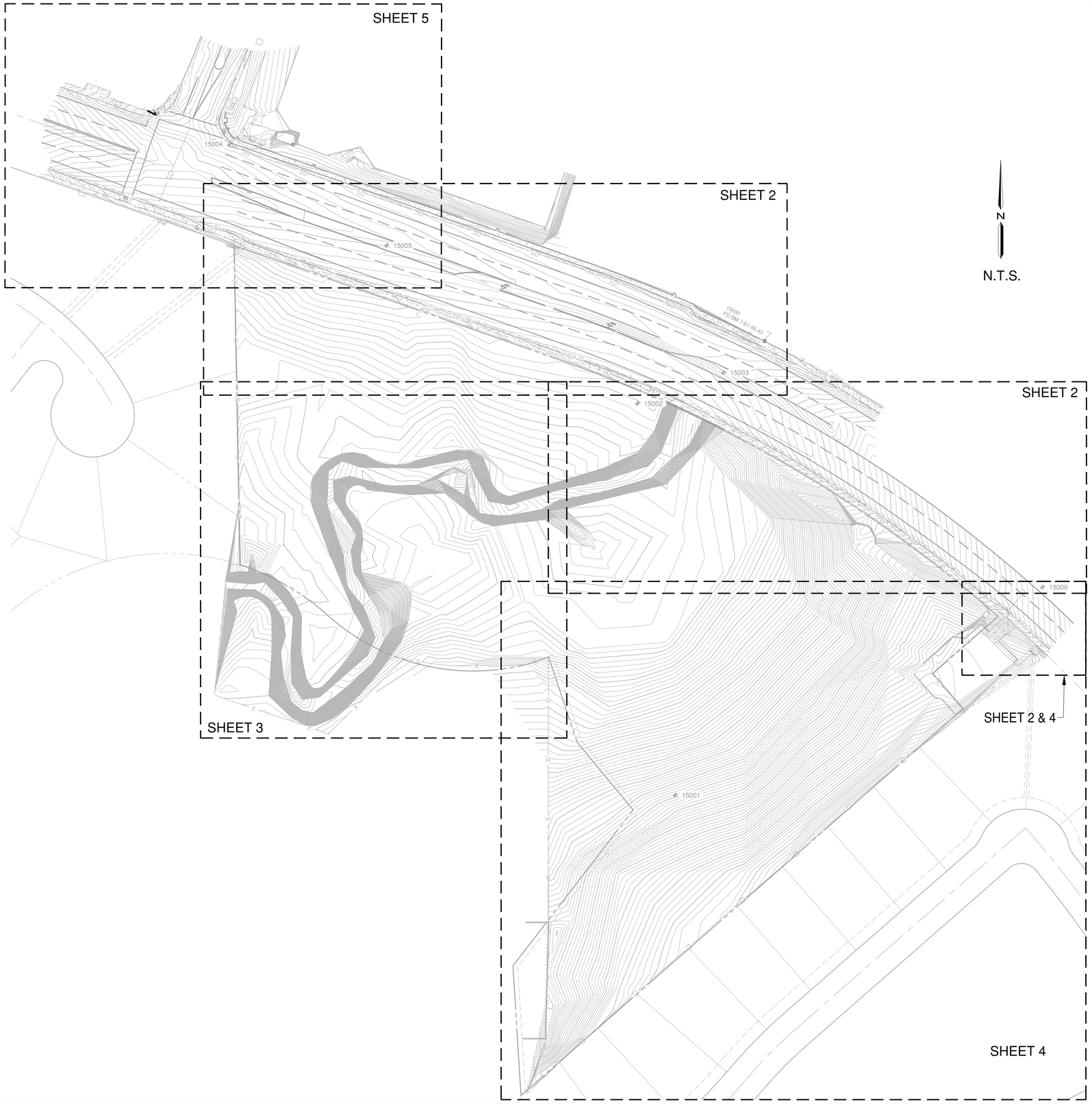

PLAN REVISIONS

NO.	DATE	REVISION

O'DELL ENGINEERING
1165 Scenic Drive, Suite A
Modesto, CA 95350
ODELLENGINEERING.COM

TOPOGRAPHIC SURVEY
SIERRA CREEK PARK
ANTELOPE, CALIFORNIA

TOPO

LICENSED LAND SURVEYOR
STEPHEN JOSEPH PYLE
No. 8385
STATE OF CALIFORNIA
12/20/2024

APPROVED:

DESIGNED:	–
DRAWN:	HD
CHECKED:	CWA
SCALE:	1"=20'
DATE:	2024/12/09
JOB NO.:	41541
FILE NO.:	41541-TP.DWG

SHEET NO.
1
OF
5

N:_ODE\Pleasanton\41541 NRHPD Sierra Creek Park\Survey\MapDwg\41541-TP.dwg 16:34:25 06/25/2026

PLAN REVISIONS

NO.	DATE	REVISION

O'DELL ENGINEERING
1165 Scenic Drive, Suite A
Modesto, CA 95350
ODELLENGINEERING.COM

TOPOGRAPHIC SURVEY

SIERRA CREEK PARK

ANTELOPE, CALIFORNIA

TOPO

APPROVED:

DESIGNED:	–
DRAWN:	HD
CHECKED:	CWA
SCALE:	1"=20'
DATE:	2024/12/09
JOB NO.:	41541
FILE NO.:	41541–TP.DWG

SHEET NO.
2
OF
5

N:_ODE\Pleasanton\41541 NRHPD Sierra Creek Park\Survey\MapDwg\41541-TP.dwg 16:35:25 06/25/2026

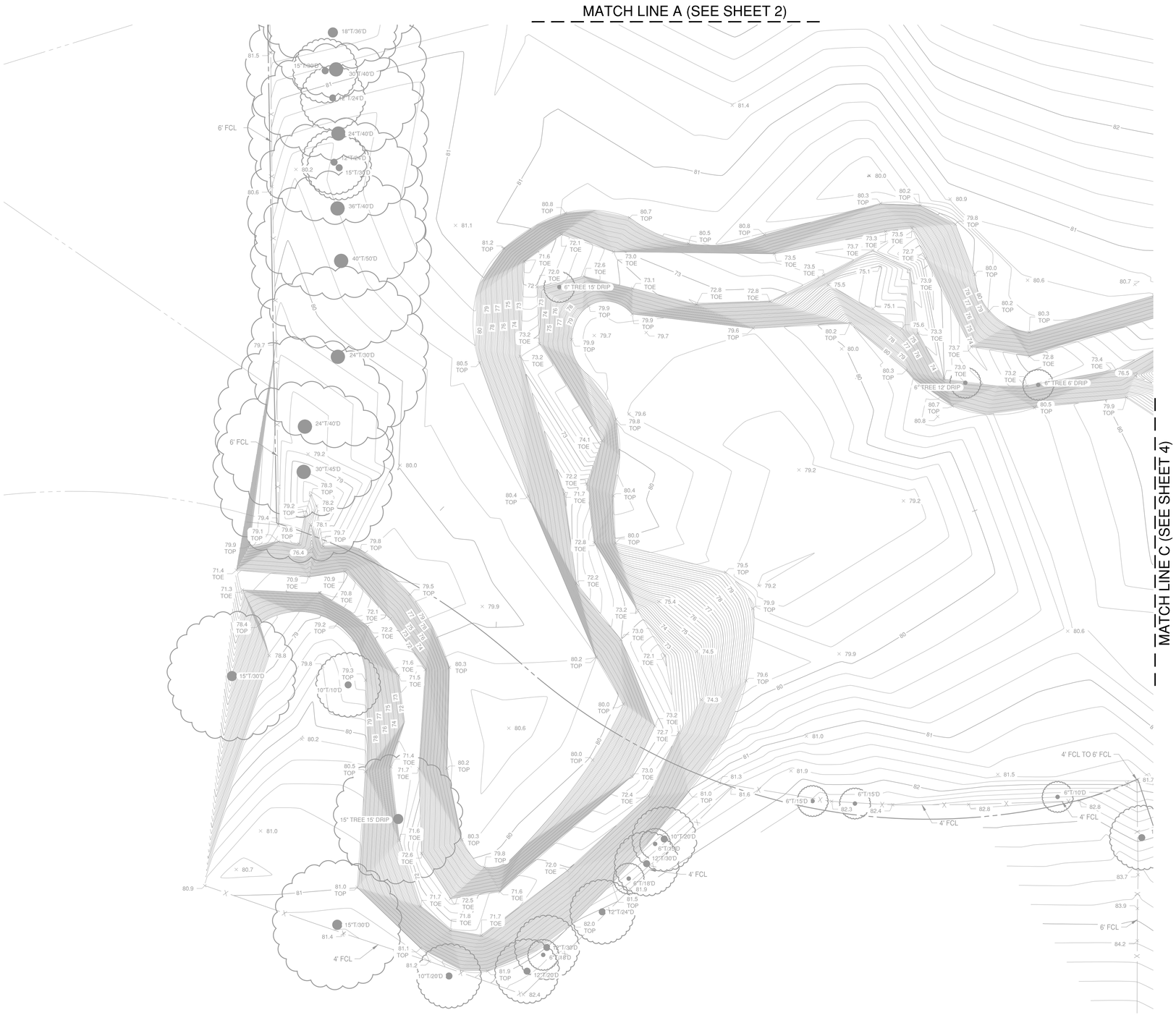

N

0 10 20 40

SCALE: 1" = 20'

PLAN REVISIONS

NO.	DATE	REVISION

O'DELL ENGINEERING
1165 Scenic Drive, Suite A
Modesto, CA 95350
ODELLENGINEERING.COM

TOPOGRAPHIC SURVEY

SIERRA CREEK PARK

ANTELOPE, CALIFORNIA

TOPO

APPROVED:

DESIGNED:	–
DRAWN:	HD
CHECKED:	CWA
SCALE:	1"=20'
DATE:	2024/12/09
JOB NO.:	41541
FILE NO.:	41541–TP.DWG

SHEET NO.
3
OF
5

N:_ODE\Pleasanton\41541 NRHPD Sierra Creek Park\Survey\MapDwg\41541–TP.dwg 16:35:25 06/25/2026

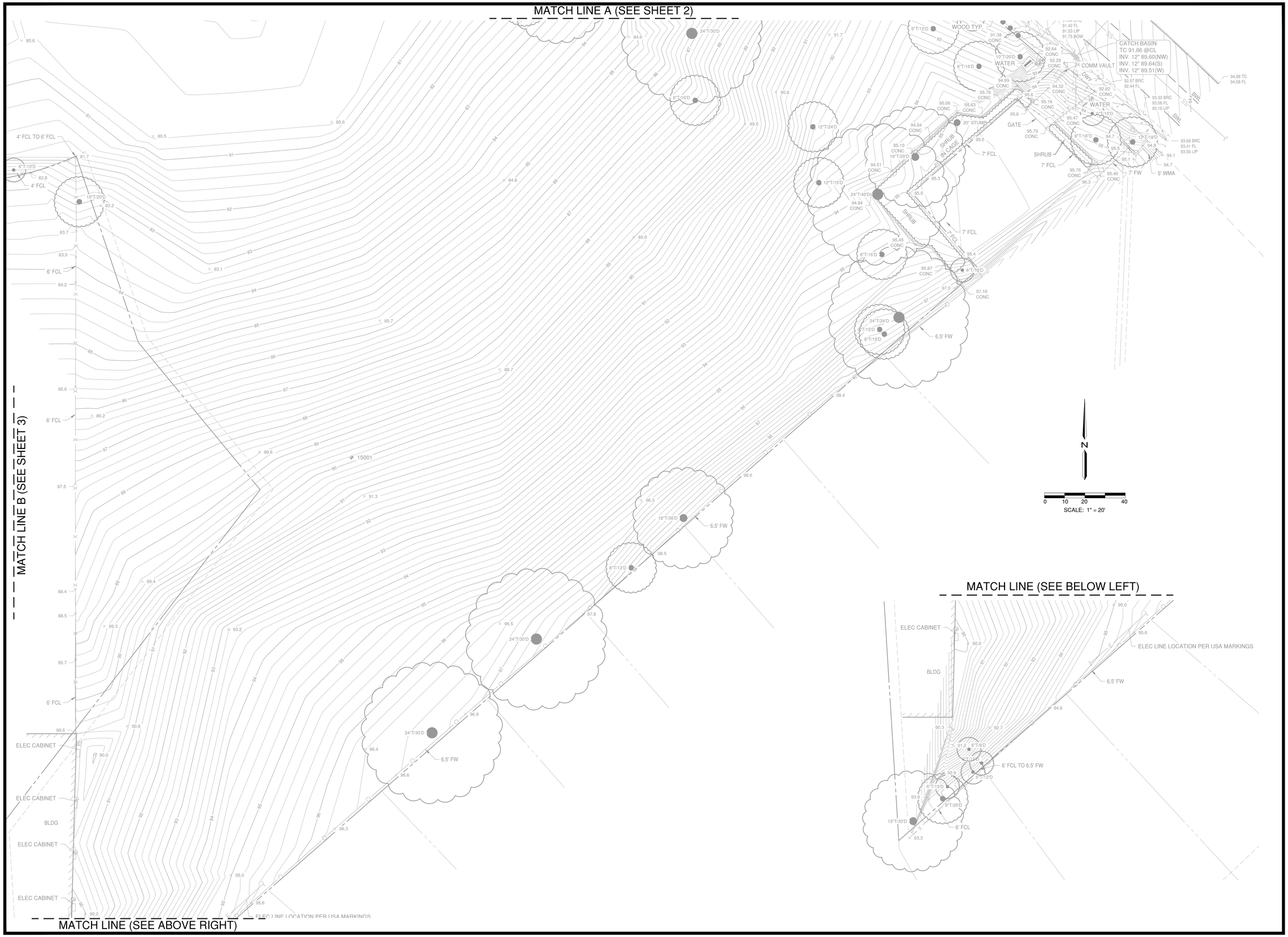

PLAN REVISIONS

NO.	DATE	REVISION

O'DELL ENGINEERING
1165 Scenic Drive, Suite A
Modesto, CA 95350
ODELLENGINEERING.COM

TOPOGRAPHIC SURVEY
SIERRA CREEK PARK
ANTELOPE, CALIFORNIA

TOPO

APPROVED:

DESIGNED:	–
DRAWN:	HD
CHECKED:	CWA
SCALE:	1"=20'
DATE:	2024/12/09
JOB NO.:	41541
FILE NO.:	41541–TP.DWG

SHEET NO.
4
OF
5

N:_ODE\Pleasanton\41541 NRHPD Sierra Creek Park\Survey\WspDwg\41541-TP.dwg 16:36:25 06/25/2026

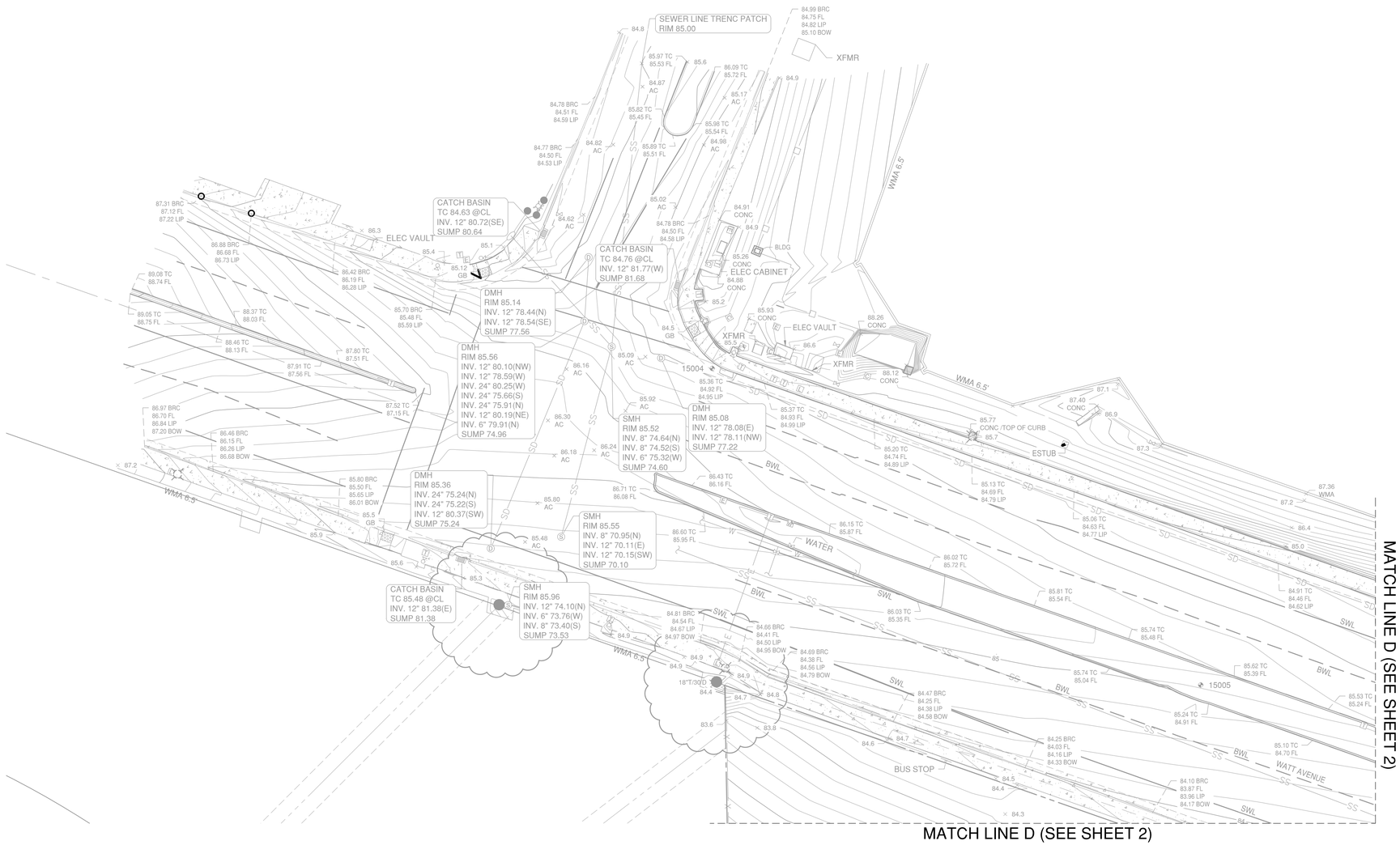

MATCH LINE D (SEE SHEET 2)

PLAN REVISIONS

NO.	DATE	REVISION

O'DELL ENGINEERING

1165 Scenic Drive, Suite A
Modesto, CA 95350

ODELLENGINEERING.COM

TOPOGRAPHIC SURVEY

SIERRA CREEK PARK

ANTELOPE, CALIFORNIA

TOPO

APPROVED:

DESIGNED:	–
DRAWN:	AS
CHECKED:	CJ
SCALE:	1"=20'
DATE:	2024/12/09
JOB NO.:	41541
FILE NO.:	41541–TP.DWG

SHEET NO.
5
OF
5

N:_ODE\Pleasanton\41541 NRHPD Sierra Creek Park\Survey\MapDwg\41541–TP.dwg 16:36:25 06/25/2026

NORTH HIGHLANDS RECREATION AND PARK DISTRICT

7781 WATT AVE

ANTELOPE, SACRAMENTO COUNTY, CALIFORNIA

SIERRA CREEK COMMUNITY PARK

LANDSCAPE IMPROVEMENT PLANS

GENERAL NOTES

1. LANDSCAPE IMPROVEMENTS SHALL BE CONSTRUCTED IN COMPLIANCE WITH **SACRAMENTO COUNTY, CALIFORNIA** CURRENT STANDARDS AND SPECIFICATIONS. IN THE EVENT THERE IS A CONFLICT WITH THE PLANS AND REFERENCES STATED ABOVE, THE GOVERNING BODY STANDARDS AND SPECIFICATIONS SHALL PREVAIL. ALL WORK SHALL BE SUBJECT TO INSPECTION.
2. DESIGN: THE DRAWINGS HEREIN REPRESENT THE DESIGN TO BE IMPLEMENTED ON THE SITE DEPICTED. THE CONTRACTOR SHALL BE RESPONSIBLE FOR CONTACTING THE LANDSCAPE ARCHITECT TO CLARIFY PLAN DETAILS RELATED TO SITE OR CONSTRUCTION DETAILS NECESSARY FOR PROJECT COMPLETION.
3. COORDINATION: CONTRACTORS SHALL COORDINATE INSTALLATION AND SCHEDULING WITH THAT OF **OWNER/OWNER REPRESENTATIVE** AND OTHER CONTRACTORS EFFICIENTLY AND IN A TIMELY MANNER, ENSURING THE PROJECT COMPLETION IS UNIMPEDED AND INSTALLED CORRECTLY WITH MINIMAL MAINTENANCE. **OWNER/OWNER REPRESENTATIVE** SHALL BE CONTACTED DIRECTLY AT LEAST TWO WORKING DAYS (48 HOURS) PRIOR TO COVERING, COMPLETION, OR EXPOSING WORK THAT WILL BE INSTALLED.
4. SITE CONDITIONS: SEE GENERAL PROVISIONS, SPECIAL PROVISIONS, GENERAL REQUIREMENTS, AND TECHNICAL SPECIFICATIONS FOR CONTRACTOR RESPONSIBILITIES RELATED TO SITE CONDITIONS. CONTRACTOR SHALL EXAMINE EXISTING CONDITIONS OF SITE. IN THE EVENT THAT ON-SITE CONDITIONS DIFFER FROM CONDITIONS DEPICTED ON PLANS AND WILL IMPACT THE INSTALLATION PROCESS, THE CONTRACTOR SHALL SUBMIT THESE FINDINGS TO THE **LANDSCAPE ARCHITECT/OWNER** IN WRITING PRIOR TO BEGINNING WORK. COMMENCEMENT OF WORK IMPLIES ACCEPTANCE OF THE EXISTING SITE CONDITIONS.
5. BASE INFORMATION: THE PROPOSED LANDSCAPE IMPROVEMENTS SHOWN HEREIN ARE SUPERIMPOSED OVER DATA PROVIDED TO THE LANDSCAPE ARCHITECT BY OTHER SOURCES. THE LANDSCAPE ARCHITECT SHALL NOT BE HELD LIABLE FOR THE CHANGES, INACCURACIES, OMISSIONS, OR OTHER ERRORS RELATED TO THIS DATA. THE BASE INFORMATION IS PROVIDED AS AN AID ONLY. THE CONTRACTOR SHALL BE RESPONSIBLE FOR REVIEWING ALL DOCUMENTS AND ACCOMMODATING ANY DISCREPANCIES.
6. BIDDING INFORMATION: SEE GENERAL PROVISIONS, SPECIAL PROVISIONS, GENERAL REQUIREMENTS, AND TECHNICAL SPECIFICATIONS FOR CONTRACTOR RESPONSIBILITIES RELATED TO BIDDING INFORMATION AND SITE VISITS PRIOR TO BID SUBMITTAL.
7. UTILITIES: THE CONTRACTOR AND ANY SUBCONTRACTORS SHALL CONTACT U.S.A. AT LEAST TWO WORKING DAYS (48 HOURS) PRIOR TO BEGINNING WORK.
8. POT HOLING: ONLY EXCAVATION WILL REVEAL ACTUAL TYPES, LOCATIONS, SIZES, AND DEPTHS OF UNDERGROUND UTILITIES. THE LANDSCAPE ARCHITECT ASSUMES NO RESPONSIBILITY FOR THE ACCURACY OF UNDERGROUND UTILITIES OR OF BURIED EXISTING OBJECTS AND UTILITIES NOT SHOWN ON THESE PLANS.
9. AS-BUILTS: FOR AS-BUILT PURPOSES, THE CONTRACTOR SHALL KEEP A CURRENT SET OF DRAWINGS ON SITE AT ALL TIMES WITH DEVIATIONS FROM ORIGINAL PLANS AND SPECIFICATIONS NOTED. UPON PROJECT COMPLETION THE CONTRACTOR SHALL PROVIDE THE CITY WITH A DIGITAL FORMAT, COMPLETE SET OF AS-BUILT DRAWINGS.

DEFERRED SUBMITTALS

1. BRIDGE – CONTRACTOR TO PROVIDE DETAILED ENGINEERED SHOP DRAWINGS FOR SACRAMENTO COUNTY APPROVAL BEFORE PROCUREMENT AND INSTALLATION.
2. RESTROOM BUILDING (PROVIDED BY OWNERS). CONTRACTOR TO SUBMIT BUILDING PLANS TO COUNTY FOR PERMITTING APPROVAL.

ABBREVIATIONS

BC	BOTTOM OF CURB	INV	INVERT ELEVATION
BW	BOTTOM OF WALL	MAX	MAXIMUM
BOW	BACK OF WALL	ME	MECHANICAL ENGINEER
CJ	TOOLED CONTROL JOINT	MIN	MINIMUM
CL	CENTERLINE	(N)	NEW
CLR	CLEAR	OC	ON CENTER
CIP	CAST IN PLACE	PA	PLANTING AREA
CMU	CONCRETE MASONRY UNIT	PIP	POURED IN PLACE CONCRETE
C	CONCRETE	POB	POINT OF BEGINNING
DG	DECOMPOSED GRANITE	R	RADIUS
DWGS	DRAWINGS	RIM	RIM ELEVATION
(E) OR EX	EXISTING	RP	RADIUS POINT
EJ	EXPANSION JOINT	SAD	SEE ARCHITECTURAL DRAWINGS
EQ	EQUAL	SCD	SEE CIVIL DRAWINGS
FC	FACE OF CURB	SED	SEE ELECTRICAL DRAWINGS
FDE	FINISH DECK ELEVATIONS	SIM	SIMILAR
FF/FFE	FINISH FLOOR ELEVATION	SLD	SEE LANDSCAPE DRAWINGS
FG	FINISH GRADE	SP	SPACE
FL	FLOW LINE	TBD	TO BE DETERMINED
FOB	FACE OF BUILDING	TC	TOP OF CURB
FOW	FACE OF WALL	TP	TOP OF PAVEMENT
FS	FINISH SURFACE	TW	TOP OF WALL
FV	FIELD VERIFY	TYP	TYPICAL
HP	HIGH POINT		

"I HAVE COMPLIED WITH THE CRITERIA OF THE WATER EFFICIENT LANDSCAPE ORDINANCE AB1881 AND APPLIED THEM ACCORDINGLY FOR THE EFFICIENT USE OF WATER IN THE LANDSCAPE DESIGN PLANS."

Karen N. Folsom — DATE: 08/31/2026

KAREN FOLSOM — R.L.A. #4994

WESTWOOD PROFESSIONAL SERVICES — EXPIRES: 3/31/2027

APPROVED BY NORTH HIGHLANDS RECREATION AND PARK DISTRICT

BY: DATE:

APPROVED BY SACRAMENTO COUNTY

BY: DATE:

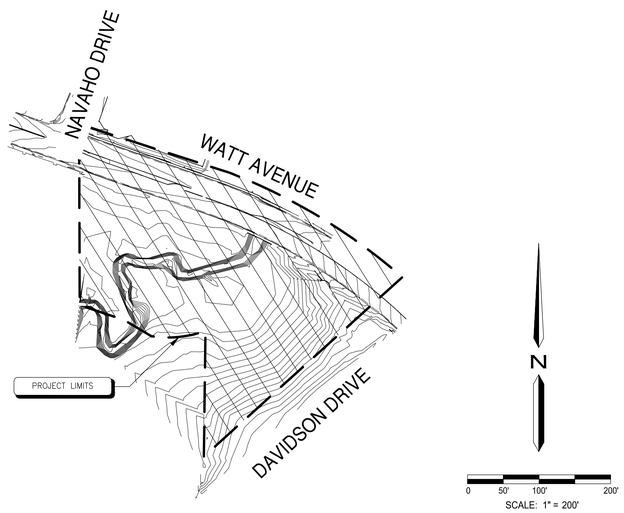

IMPROVEMENT LIMITS

PROJECT INFORMATION

PROJECT TITLE:	7781 WATT AVE SIERRA CREEK COMMUNITY PARK	PROJECT TYPE:	PARK RENOVATION
PARCEL NUMBER:	203-0310-045	ADJACENT PROPERTY USES:	NORTH – NEW RESIDENTIAL DEVELOPMENT SOUTH – SCHOOL EAST – RESIDENTIAL WEST – RESIDENTIAL
PROJECT ADDRESS:	7781 WATT AVE AND DAVIDSON DRIVE, ANTELOPE, CA, 95843	GEOTECHNICAL REPORT:	BY ENGEO DATED 2/12/2022 UPDATED 04/17/2025
APPLICANT/OWNER:	NHRPD		
PLANS PREPARED BY:	WESTWOOD PS 6200 STONERIDGE MALL ROAD, SUITE 330 PLEASANTON, CA 94588 (925) 223-8340 OFFICE EMAIL: KAREN.FOLSOM@WESTWOODPS.COM	TOPOGRAPHIC SURVEY:	BY O'DELL ENGINEERING, A WESTWOOD COMPANY DATED 03/06/2023 UPDATED 12/09/2024
LICENSE NUMBER:	CLA #4994	ARBORIST REPORT:	BY AECOM DATED 09/23/2020
LANDSCAPE AREA	232,203 SQUARE FEET		

PROJECT TEAM

WESTWOOD PS

OWNER:
SCOTT GRAHAM
NORTH HIGHLANDS RECREATION AND PARK DISTRICT
6040 WATT AVE, NORTH HIGHLANDS, CA 95660
(916) 332-7440

CIVIL:
ROBERT CHEN
WESTWOOD PS
6200 STONERIDGE MALL ROAD, SUITE 330
PLEASANTON, CA 94588
(925) 223-8340
ROBERT.CHEN@WESTWOODPS.COM

SURVEY:
SCOTT ROBERTS
WESTWOOD PS
7110 N FRESNO STREET, #160
FRESNO, CA 93720
(559) 451-0395
SCOTT.ROBERTS@WESTWOODPS.COM

LANDSCAPE ARCHITECT:
KAREN FOLSOM
WESTWOOD PS
6200 STONERIDGE MALL ROAD, SUITE 330
PLEASANTON, CA 94588
(925) 223-8340
KAREN.FOLSOM@WESTWOODPS.COM

ELECTRICAL
KEVIN PEZZONI
PEZZONI ENGINEERING
1150 9TH STREET, SUITE 1415
MODESTO, CA 95354
(209) 554-4602
KPEZZONI@PEZENGR.COM

STRUCTURAL
NICK FAHRNEY
PELTON WYLIE + FAHRNEY
2813 COFFEE ROAD, SUITE D1
MODESTO, CA 95355
(209)575-9619
NICK@PWF-ENG.COM

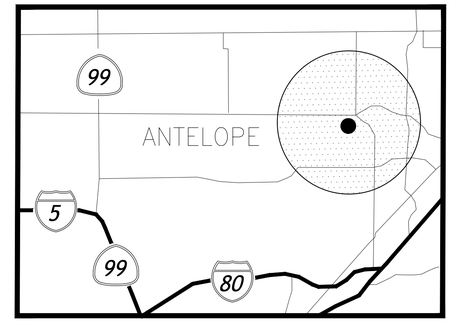

SHEET INDEX

LANDSCAPE

CS	COVER SHEET
L1.0	DEMOLITION LEGEND & NOTES
L1.1	DEMOLITION PLAN
L1.2	DEMOLITION PLAN
L2.0	SITE FEATURES LEGEND & NOTES
L2.1	SITE FEATURES PLAN
L2.2	SITE FEATURES PLAN
L2.3	ENLARGEMENT PLAN
L2.4	SECTIONS & ELEVATIONS PLAN
L3.0	HORIZONTAL CONTROL PLAN
L3.1	HORIZONTAL CONTROL PLAN
L3.2	HORIZONTAL CONTROL PLAN
L4.0	IRRIGATION LEGEND & NOTES
L4.1	IRRIGATION PLAN
L4.2	IRRIGATION PLAN
L5.0	PLANTING LEGEND & NOTES
L5.1	PLANTING PLAN
L5.2	PLANTING PLAN
L6.0	CONSTRUCTION DETAILS
L6.1	CONSTRUCTION DETAILS
L6.2	CONSTRUCTION DETAILS
L6.3	CONSTRUCTION DETAILS
L6.4	CONSTRUCTION DETAILS
L6.5	CONSTRUCTION DETAILS
L7.0	IRRIGATION DETAILS
L7.1	IRRIGATION DETAILS
L8.0	PLANTING DETAILS

CIVIL

C2.1	GRADING PLAN
C2.2	GRADING PLAN
C3.1	UTILITY PLAN
C3.2	UTILITY PLAN
C4.1	TRAFFIC SIGNING & STRIPING
C6.1	DETAILS
C6.2	DETAILS
C6.3	DETAILS

ELECTRICAL

E0.1	GENERAL NOTES, ABBREVIATIONS, AND ELECTRICAL SYMBOLS
E1.1	PARTIAL SITE PLAN ELECTRICAL
E1.2	PARTIAL SITE PLAN ELECTRICAL
E2.1	SITE PLAN– PHOTOMETRICS
E2.2	SITE PLAN– PHOTOMETRICS
E3.1	DETAILS
E3.2	PEDESTAL DETAIL, PANEL SCHEDULE AND SINGLE LINE DIA.

811 Know what's **below.** **Call** before you dig.

Westwood
Westwood Professional Services, Inc.
6200 STONERIDGE MALL ROAD, SUITE 330
PLEASANTON, CA 94588
T: 925.223.8340
www.westwoodps.com

NO.	DESCRIPTION	DATE	BY	APP. DATE	APP.

ANTELOPE, CALIFORNIA

NHRPD SIERRA CREEK PARK

7781 WATT AVE
COVER SHEET

DATE: 08/31/2026
DRAFTER: TH, AL, CY
DESIGNER: KF, TH
CHECKED: KF, JG
PROJECT NO. 41541

LICENSED LANDSCAPE ARCHITECT — KAREN N. FOLSOM #4994 — Signature — 03/31/27 Renewal Date — 08/31/26 Date — STATE OF CALIFORNIA

CS

Last Saved by: MALoureiro
Plot Date: Wednesday, August 20, 2025 3:19 PM
Drawing: N:_DSE\Pleasanton\41541 NHRPD Sierra Creek Park\Landscape\Const\Plans\41541-CS - LA

EXISTING TREE SCHEDULE

ID	ARBORIST #	SPECIES	SIZE (DBH)	CONDITION	REMOVE/PROTECT
1	VO-06	QUERCUS LOBATA/VALLEY OAK	30	GOOD	PROTECT
2	H-22	CELTIS SINENSIS/HACKBERRY	12	GOOD	PROTECT
3	VO-05	QUERCUS LOBATA/VALLEY OAK	27	FAIR	PROTECT
4	VO-04	QUERCUS LOBATA/VALLEY OAK	6	GOOD	PROTECT
5	H-21	CELTIS SINENSIS/HACKBERRY	28	GOOD	PROTECT
9	P-01	CARYA ILLINOINENSIS/PECAN	8	GOOD	PROTECT
10	VO-03	QUERCUS LOBATA/VALLEY OAK	2	GOOD	PROTECT
11	CO-01	QUERCUS SUBER/CORK OAK	4	GOOD	PROTECT
13	IP-01	PINUS PINEA/ITALIAN PINE	20	FAIR	PROTECT
15	VO-08	QUERCUS LOBATA/VALLEY OAK	12	GOOD	PROTECT
16	H-13	CELTIS SINENSIS/HACKBERRY	10	FAIR	PROTECT
17	H-12	CELTIS SINENSIS/HACKBERRY	7	GOOD	PROTECT
18	H-20	CELTIS SINENSIS/HACKBERRY	4	FAIR	PROTECT
19	H-19	CELTIS SINENSIS/HACKBERRY	8	FAIR	PROTECT
20	H-18	CELTIS SINENSIS/HACKBERRY	8	GOOD	PROTECT
21	H-17	CELTIS SINENSIS/HACKBERRY	6	FAIR	PROTECT
22	H-11	CELTIS SINENSIS/HACKBERRY	7	GOOD	PROTECT
23	H-10	CELTIS SINENSIS/HACKBERRY	11	FAIR	PROTECT
24	H-09	CELTIS SINENSIS/HACKBERRY	12	GOOD	PROTECT
25	H-08	CELTIS SINENSIS/HACKBERRY	15	GOOD	PROTECT
26	H-07	CELTIS SINENSIS/HACKBERRY	11	GOOD	PROTECT
27	H-16	CELTIS SINENSIS/HACKBERRY	13	FAIR	PROTECT
28	H-06	CELTIS SINENSIS/HACKBERRY	14	GOOD	PROTECT
29	H-15	CELTIS SINENSIS/HACKBERRY	16	GOOD	PROTECT
30	H-05	CELTIS SINENSIS/HACKBERRY	11	FAIR	PROTECT
31	H-04	CELTIS SINENSIS/HACKBERRY	10	FAIR	PROTECT
32	H-03	CELTIS SINENSIS/HACKBERRY	10	GOOD	PROTECT
33	H-02	CELTIS SINENSIS/HACKBERRY	9	GOOD	REMOVE
34	H-14	CELTIS SINENSIS/HACKBERRY	12	GOOD	PROTECT
35	H-01	CELTIS SINENSIS/HACKBERRY	14	GOOD	PROTECT
36	P-04	CARYA ILLINOINENSIS/PECAN	9	GOOD	PROTECT
37	VO-07	QUERCUS LOBATA/VALLEY OAK	20	FAIR	PROTECT
38	H-24	CELTIS SINENSIS/HACKBERRY	9	GOOD	PROTECT
39	H-23	CELTIS SINENSIS/HACKBERRY	15	GOOD	PROTECT
40	VO-02	QUERCUS LOBATA/VALLEY OAK	24	GOOD	PROTECT
41	OA-02	FRAXINUS LATIFOLIA/OREGON ASH	28	GOOD	PROTECT
42	CP-01	PISTACIA CHINENSIS/CHINESE PISTACHE	11	GOOD	PROTECT
43	LP-03	PLATANUS X ACERIFOLIA/LONDON PLANE	17	GOOD	PROTECT
44	LP-02	PLATANUS X ACERIFOLIA/LONDON PLANE	15	GOOD	PROTECT
45	LP-01	PLATANUS X ACERIFOLIA/LONDON PLANE	16	GOOD	PROTECT
46	VO-01	QUERCUS LOBATA/VALLEY OAK	11	GOOD	PROTECT
47	OA-01	FRAXINUS LATIFOLIA/OREGON ASH	3	GOOD	PROTECT
48	CT-01	TRIADICA SEBIFERA/CHINESE TALLOW	4	FAIR	PROTECT
49	CT-02	TRIADICA SEBIFERA/CHINESE TALLOW	13	FAIR	PROTECT
50	CT-03	TRIADICA SEBIFERA/CHINESE TALLOW	10	GOOD	PROTECT
51	CT-04	TRIADICA SEBIFERA/CHINESE TALLOW	14	GOOD	PROTECT
52	CT-07	TRIADICA SEBIFERA/CHINESE TALLOW	8	GOOD	PROTECT
53	M-01	MORUS ALBA/MULBERRY	10	POOR	PROTECT
54		EUCALYPTUS SIDEROXYLON/RED IRON BARK	30	GOOD	PROTECT
55		EUCALYPTUS SIDEROXYLON/RED IRON BARK	24	GOOD	PROTECT
56	RIB-09	EUCALYPTUS SIDEROXYLON/RED IRON BARK	21	FAIR	PROTECT
57	RIB-08	EUCALYPTUS SIDEROXYLON/RED IRON BARK	43	FAIR	PROTECT
58	RIB-07	EUCALYPTUS SIDEROXYLON/RED IRON BARK	33	GOOD	PROTECT
59	RIB-06	EUCALYPTUS SIDEROXYLON/RED IRON BARK	12	GOOD	PROTECT
60		EUCALYPTUS SIDEROXYLON/RED IRON BARK	15	GOOD	PROTECT
61	RIB-05	EUCALYPTUS SIDEROXYLON/RED IRON BARK	24	FAIR	PROTECT
62	RIB-04	EUCALYPTUS SIDEROXYLON/RED IRON BARK	12	POOR	PROTECT
63	RIB-03	EUCALYPTUS SIDEROXYLON/RED IRON BARK	15	GOOD	PROTECT
64		EUCALYPTUS SIDEROXYLON/RED IRON BARK	30	FAIR	PROTECT
65	RIB-02	EUCALYPTUS SIDEROXYLON/RED IRON BARK	18	GOOD	PROTECT
66	RIB-01	EUCALYPTUS SIDEROXYLON/RED IRON BARK	36	GOOD	PROTECT

TREE PROTECTION NOTES

1. THE GENERAL CONTRACTOR IS RESPONSIBLE FOR COORDINATION OF ALL SUBCONTRACTORS AND WORK THAT MAY IMPACT TREE HEALTH.
2. REFER TO TREE PROTECTION SPECIFICATIONS AND ALL LANDSCAPE ARCHITECTURAL PLANS, NOTES AND DETAILS FOR FURTHER REQUIREMENTS
3. PRIOR TO ANY CONSTRUCTION ACTIVITY AT THE SITE INCLUDING DEMOLITION, UTILITY WORK, GRADING, STORAGE OF MATERIALS, OR INSTALLATION OF TEMPORARY CONSTRUCTION FACILITIES, INSTALL ALL TREE PROTECTION FENCING, TREE PROTECTION SIGNS, AND MULCH AS DESCRIBED IN THE SPECIFICATIONS. TREE PROTECTION FENCING SHALL BE CONSTRUCTED WITHIN THE DRIPLINE, AND AROUND THE TRUNKS OF TREES AS INDICATED ON THIS PLAN, SO AS TO PREVENT INJURY TO TREES, MAKING THEM SUSCEPTIBLE TO DISEASE-CAUSING ORGANISMS. SIGNAGE SHALL BE ATTACHED TO THE FENCE EVERY 25 FEET, STATING THAT THERE ARE TREE PROTECTION REQUIREMENTS FOR THE PROJECT SITE. SEE SPECIFICATIONS. FENCING LOCATIONS ARE SHOWN IN PLAN.
4. PRE-CONSTRUCTION CONFERENCE IS TO BE SCHEDULED PRIOR TO ANY WORK, WITH ALL AFFECTED SUBCONTRACTORS IN ATTENDANCE. REVIEW OF TREE PROTECTION FENCING SHALL OCCUR DURING THIS MEETING.
5. A 3" LAYER OF BARK MULCH SHALL BE PROVIDED AT THE BASE OF EACH TREE TO REMAIN. THIS MULCH RING SHALL COVER A MINIMUM OF 2' FROM THE TRUNK IN DIAMETER, AND BE 6" CLEAR FROM BASE OF TRUNK.
6. TEMPORARY IRRIGATION SHALL BE PROVIDED THAT WILL PROVIDE WATER IN AS CLOSE TO NORMAL AMOUNTS AS POSSIBLE. THE EXISTING TREES TO REMAIN ARE ACCUSTOMED TO A CERTAIN REGIMEN, AND DISRUPTION OF THIS MAY CAUSE STRESS AND FAILURE. THE IRRIGATION SYSTEM IS TO REMAIN INTACT DURING CONSTRUCTION. iF THIS IS NOT POSSIBLE, TREES ARE TO BE DEEP, HAND-WATERED AT WEEKLY INTERVALS WITH SOAKER HOSE LOCATED THROUGHOUT DRIPLINE.
7. DURING CONSTRUCTION ACTIVITIES, EQUIPMENT SHALL NOT ENTER THE TREE PROTECTION ZONE. EQUIPMENT, VEHICLES, OR MATERIALS SHALL BE STORED, PARKED, OR STANDING WITHIN THE TREE DRIPLINE.
8. ALL TRENCHING AND DIGGING WITHIN DRIPLINE SHALL BE DONE BY HAND.
9. DISPOSAL OF WASTE PRODUCTS AND STORAGE OF CONSTRUCTION MATERIALS IS NOT PERMITTED WITHIN THE FENCED TREE PROTECTION ZONE. NO PAINT THINNER, PAINT, PLASTER, OR OTHER LIQUID OR SOLID EXCESS OR WASTE CONSTRUCTION MATERIALS OR WASTEWATER SHALL BE DUMPED ON THE GROUND OR INTO ANY GRATE BETWEEN THE DRIPLINE AND THE BASE OF THE TREE OR UPHILL FROM ANY TREE WHERE CERTAIN SUBSTANCES MIGHT REACH THE ROOTS THROUGH A LEACHING PROCESS.
10. DAMAGE TO ANY TREE DURING CONSTRUCTION SHALL BE IMMEDIATELY REPORTED BY THE PERSON CAUSING THE DAMAGE, TO THE RESPONSIBLE CONTRACTOR, AND/OR OWNER. REFER TO SPECIFICATIONS.
11. WIRES, SIGNS, AND OTHER SIMILAR ITEMS SHALL NOT BE ATTACHED TO TREES.
12. TREES SHALL BE WASHED OF CONSTRUCTION DUST ON A WEEKLY BASIS.

1. PROTECTIVE BARRIER FENCING MATERIAL, DEFINING THE EDGE OF THE TREE PROTECTIVE ZONE, SHALL BE:
   - 4' HEIGHT
   - UV STABILIZED
   - 2600 PSI TENSILE STRENGTH
   - BRIGHT CONTRASTING COLOR

   PLACED AT A DISTANCE 1.5' PER INCH AT DIAMETER AT BREAST HEIGHT (D.B.H.) FROM THE TRUNK, OR AS OTHERWISE SHOWN ON PLAN.
2. EXISTING TREE TO BE PROTECTED
3. PROTECTION ZONE
4. WARNING SIGN ON EACH FENCE AS DEPICTED, WATERPROOF 18"x24"
5. UV STABILIZED 120LB BREAKING STRENGTH, NYLON TIE, MATCHING BARRIER COLOR (3 PER POST).
6. FENCE POST- METAL T-POSTS OR EQUAL @ 8' O.C.
7. 6" GROUND STAPLES

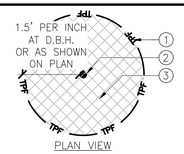

PLAN VIEW

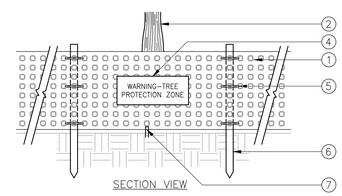

SECTION VIEW

NOTES:

A. EXISTING TREES WITHIN PROJECT LIMIT OF WORK SHOWN TO BE PROTECTED SHALL BE FENCED OFF WITH ORANGE CONSTRUCTION FENCING AS INDICATED ABOVE.
B. WATERPROOF SIGNS (18"x24"), SHALL BE POSTED AT ENTRANCE POINTS TO SITE WITH INSTRUCTIONS TO PERSONNEL REGARDING RESTRICTIONS WITHIN THE FENCED AREAS. THE FOLLOWING ACTIVITIES MAY NOT OCCUR WITHIN THE FENCED AREAS.
   a. ADDITION/REMOVAL/STORAGE OF SOIL,
   b. PARKING OF VEHICLES, PLACEMENT OF EQUIPMENT, STORAGE OF MATERIALS
   c. BURNING AND CEMENT WASH-OUT
C. ALL UNDERGROUND WORK REQUIRED WITHIN DRIP LINE OF TREES AND BELOW ORIGINAL GRADE SHALL BE PREVIEWED BY THE CITY AND LANDSCAPE ARCHITECT TO DETERMINE POTENTIAL IMPACT ON TREES HAND TRENCHING SHALL BE REQUIRED WHERE EXISTING TREE ROOT SYSTEMS COULD BE DAMAGED BY EQUIPMENT.
D. A TREE WATERING SCHEDULE SHALL BE REQUIRED WHEN CONSTRUCTION LASTS MORE THAN 1-MONTH. CONTRACTOR SHALL PROVIDE TO LANDSCAPE ARCHITECT FOR REVIEW AND APPROVAL PRIOR TO START OF CONSTRUCTION.
E. ADDITIONAL PROTECTION SHALL BE REQUIRED WHEN: TREE'S CANOPY IS IN JEOPARDY, EXTREME SOIL COMPACTION OCCURS NEAR TREE, OR MAJOR GRADE CHANGE OCCURS NEAR TREE.
F. IN THE EVENT THAT ROOT DAMAGE TO FIBROUS/MINOR ROOTS OCCURS DURING PROJECT CONSTRUCTION THEY SHALL BE CLEANLY SEVERED AT A 90° ANGLE TO MINIMIZE DAMAGE.
G. IN THE EVENT THAT THE ARBORIST RECOMMENDS REPLACEMENT OF AN EXISTING TREE DAMAGED BY THE CONTRACTOR, THE CONTRACTOR SHALL REPLACE THE TREE WITH STOCK NO SMALLER THAN A 48" BOX AND FAIRLY COMPENSATE THE DISTRICT FOR DAMAGES.
H. FENCING MUST BE IN PLACE PRIOR TO SITE WORK. A STOP WORK ORDER WILL BE GIVEN IF FENCING IS NOT IN PLACE AND WILL REMAIN IN EFFECT UNTIL FENCING IS INSTALLED / REPAIRED. WORK DAYS WILL NOT BE EXTENDED FOR ANY DELAYS RELATED TO TREE FENCING.

1 *TREE PROTECTION FENCING*

NOT TO SCALE

SACRAMENTO COUNTY TREE PRESERVATION NOTES

1. NO PERSON SHALL TRENCH, GRADE OR FILL WITHIN THE DRIPLINE OF ANY TREE OR DESTROY, KILL OR REMOVE ANY TREE AS DEFINED, IN THE DESIGNATED URBAN AREA OF THE UNINCORPORATED AREA OF SACRAMENTO COUNTY, ON ANY PROPERTY, PUBLIC OR PRIVATE, WITHOUT A TREE PERMIT, OR UNLESS AUTHORIZED AS A CONDITION OF A DISCRETIONARY PROJECT APPROVAL BY THE BOARD OF SUPERVISORS, COUNTY PLANNING COMMISSION, ZONING BOARD OF APPEALS,THE ZONING ADMINISTRATOR OR THE SUBDIVISION REVIEW COMMITTEE. (SCC 1400 § 23, 2008; SCC 480 § 1, 1981.)

2. THE APPROVING BODY MAY MANDATE ANY OR ALL OF THE FOLLOWING CONTROL MEASURES TO MITIGATE DAMAGE TO OAK TREES CAUSED BY LAND DEVELOPMENT:
   2.1. NO GRADE CUTS GREATER THAN ONE FOOT SHALL OCCUR WITHIN THE DRIPLINES OF OAK TREES, AND NO GRADE CUTS WHATSOEVER SHALL OCCUR WITHIN FIVE FEET OF THEIR TRUNKS;
   2.2. NO FILL GREATER THAN ONE FOOT SHALL BE PLACED WITHIN THE DRIPLINES OF OAK TREES AND NO FILL WHATSOEVER SHALL BE PLACED WITHIN FIVE FEET OF THEIR TRUNKS;
   2.3. NO TRENCHING WHATSOEVER SHALL BE ALLOWED WITHIN THE DRIPLINES OF OAK TREES. IF IT IS ABSOLUTELY NECESSARY TO INSTALL UNDERGROUND UTILITIES WITHIN THE DRIPLINES OF AN OAK TREE, THE TRENCH SHALL BE EITHER BORED OR DRILLED;
   2.4. NO IRRIGATION SYSTEM SHALL BE INSTALLED WITHIN THE DRIPLINES OF OAK TREE(S) WHICH MAY BE DETRIMENTAL TO THE PRESERVATION OF THE OAK TREE(S) UNLESS SPECIFICALLY AUTHORIZED BY THE APPROVING BODY OR THE DIRECTOR OF PUBLIC WORKS.

3. GRADING BENEATH TREES TO BE SAVED SHALL BE GIVEN SPECIAL ATTENTION. EVERY REASONABLE EFFORT SHALL BE MADE TO AVOID CREATING CONDITIONS ADVERSE TO THE TREE'S HEALTH. THE NATURAL GROUND WITHIN THE DRIPLINES OF PROTECTED TREES SHALL REMAIN AS UNDISTURBED AS POSSIBLE. GRADING WITHIN THE DRIPLINES OF OAK TREES WILL NOT BE PERMITTED UNLESS SPECIFICALLY AUTHORIZED BY THE APPROVING BODY OR BY THE DIRECTOR OF PUBLIC WORKS.
   3.1. MAJOR ROOTS TWO INCHES OR GREATER IN DIAMETER ENCOUNTERED WITHIN THE TREE'S DRIPLINE IN THE COURSE OF EXCAVATION FROM BENEATH TREES WHICH ARE NOT TO BE REMOVED SHALL NOT BE CUT AND SHALL BE KEPT MOIST AND COVERED WITH EARTH AS SOON AS POSSIBLE. ROOTS ONE INCH TO TWO INCHES IN DIAMETER WHICH ARE SEVERED SHALL BE TRIMMED AND TREATED WITH PRUNING COMPOUND AND COVERED WITH EARTH AS SOON AS POSSIBLE.
   3.2. SUPPORT ROOTS THAT ARE INSIDE THE DRIPLINE OF THE TREE SHALL BE PROTECTED. THE PERMITTEE IS REQUIRED TO HAND-DIG IN THE VICINITY OF MAJOR TREES TO PREVENT ROOT CUTTING AND MANGLING WHICH MAY BE CAUSED BY HEAVY EQUIPMENT.
   3.3. CROSS SECTIONS MAY BE REQUIRED WHERE TREES ARE LOCATED ADJACENT TO ROADWAYS, NEW SLOPES OR CRITICAL AREAS. IN ADDITION, A DIMENSION FROM THE FACE OF A TREE TO SOME CRITICAL POINT OR LINE MAY BE REQUIRED.
   3.4. ANY CONDITION IMPOSED BY A PLANNING COMMISSION, THE ZONING ADMINISTRATOR, THE BOARD OF ZONING APPEALS, THE SUBDIVISION REVIEW COMMITTEE, OR THE BOARD OF SUPERVISORS RELATING TO GRADING IN THE VICINITY OF TREES, IS INCORPORATED INTO AND MADE A PART OF THE IMPROVEMENT STANDARDS. THE CONSULTING ENGINEER FOR THE PROJECT SHALL VERIFY IN WRITING ON A FORM TO BE PROVIDED BY THE DIRECTOR OF PUBLIC WORKS THAT THE GRADING HAS BEEN COMPLETED AS REQUIRED BY THIS SECTION AND ANY CONDITIONS IMPOSED BY A PLANNING COMMISSION, THE ZONING ADMINISTRATOR, THE BOARD OF ZONING APPEALS, THE SUBDIVISION REVIEW COMMITTEE, OR THE BOARD OF SUPERVISORS. (SCC 480 § 1, 1981.)

DEMOLITION NOTES

1. ALL ITEMS SCHEDULED FOR REMOVAL SHALL BE PROPERLY AND LEGALLY DISPOSED OF OFF-SITE. VERIFY WITH DISTRICT PRIOR TO CONSTRUCTION.
2. CONTRACTOR SHALL PROTECT ALL SITE FEATURES UNLESS OTHERWISE NOTED.
3. CONTRACTOR SHALL COORDINATE WITH ALL UTILITY COMPANIES AND PUBLIC AGENCIES TO DISCONNECT EXISTING UTILITIES TO THE PROJECT SITE PRIOR TO DEMOLITION.
4. CONTRACTOR SHALL PROTECT ALL UTILITY STRUCTURES UNLESS OTHERWISE NOTED.
5. CONTRACTOR SHALL SAWCUT IN A CLEAN STRAIGHT LINE.
6. CONSTRUCTION FENCE SHALL BE INSTALLED THROUGHOUT DURATION OF PROJECT CONSTRUCTION. CONTRACTOR SHALL LIMIT PARKING AREA AND ROAD CLOSURES.
7. ALL IRRIGATION NOT SHOWN FOR REMOVAL SHALL REMAIN OPERATIONAL DURING CONSTRUCTION. SHUT-OFF OF WATER SHALL BE LIMITED TO 48 HOURS MAXIMUM WITH PRIOR NOTIFICATION TO DISTRICT.
8. TREE PROTECTION FENCE TO BE INSTALLED PRIOR TO COMMENCEMENT OF CONSTRUCTION ACTIVITIES, INCLUDING DEMOLITION.
9. PRESERVE AND PROTECT ALL SOILS, PLANTS, AND EXISTING CONDITIONS WITHIN THE CREEK ZONE.
10. GENERAL CONTRACTOR SHALL INSTALL EROSION CONTROL MEASURES TO SATISFACTION OF DISTRICT TO INSURE THE CREEK HABITAT IS NOT ENDANGERED, DAMAGED OR CHANGED IN AN WAY.
11. GENERAL CONTRACTOR SHALL ASSURE THAT ALL WORK ON THE PROJECT SITE DOES NOT DISTURB SOIL OR PLANT MATERIAL WITHIN THE CREEK LIMITS

MONUMENT DETECTION AND PRESERVATION

1. COUNTY RECORDS SHOW A POTENTIAL LOCATION OF A MONUMENT ON THE WATT AVENUE FRONTAGE THAT IS REQUIRED TO BE PRESERVED.
2. DURING LAND SURVEYING WORK, A POTENTIAL LOCATION WAS IDENTIFIED UNDER EXISTING SIDEWALK. THE LOCATION IS APPROXIMATELY 370 FEET SOUTHEAST ALONG THE SOUTHERLY R/W OF WATT AVE FROM THE MOST NORTHERLY CORNER OF LOT A AS SHOWN ON THE MAP TITLED "MIDTOWN VILLAGE" RECORDED IN BK 113 OF MAPS, MAP NO. 3 OF SACRAMENTO COUNTY.
3. CONTRACTOR SHALL PROVIDE 72 HOURS NOTICE THAT DEMOLITION OF EXISTING SIDEWALK IS SCHEDULED, TO THE DISTRICT'S REPRESENTATIVE. THE LAND SURVEY CREW MUST BE PRESENT AT THE TIME OF SIDEWALK REMOVAL TO LOCATE THE MONUMENT WHEN EXPOSED.

Know what's **below.**
Call before you dig.

Westwood
Westwood Professional Services, Inc.
6200 STONERIDGE MALL ROAD, SUITE 330
PLEASANTON, CA 94588
T: 925.223.8340
westwoodps.com

NO.	DESCRIPTION	DATE	BY	APP. DATE	APP.

ANTELOPE, CALIFORNIA

NHRPD SIERRA CREEK PARK

7781 WATT AVE

DEMOLITION LEGEND & NOTES

DATE: 08/31/26
DRAFTER: TH, AL, CY
DESIGNER: KF, TH
CHECKED: KF, JG

PROJECT NO.
41541

LICENSED LANDSCAPE ARCHITECT
KIRSTEN N. FOLSOM
Signature
03/31/27
Renewal Date
08/31/26
Date
STATE OF CALIFORNIA

L1.0

Last Saved by: MALocsmo
Plot Scale: 1:1 Plot Date: 8/27/2026 9:54 AM
Drawing: N:_ODE\Pleasanton\41541 NRHPD Sierra Creek Park\Landscape\ConstPlans\41541-DM

LEGEND

- EXISTING TREE TO BE REMOVED.
- EXISTING TREE TO BE PROTECTED IN PLACE.
- TREE NUMBER: REFER TO L1.0
- EXISTING LAWN TO REMAIN, PROTECT IN PLACE. REFER TO IRRIGATION PLAN.
- CLEAR AND GRUB. REMOVE PLANTS, WEEDS AND SURFACE MATERIALS, ALL TREES TO BE REMAIN AND PROTECTED. (219,433 SF +/-)
- CLEAR AND GRUB BY HAND W/IN DRIPLINE. CLEAR AND GRUB REMOVAL WITHIN EXISTING TREE DRIPLINES SHALL NOT EXCEED 3" DEPTH. TREE ROOT REMOVAL SHALL NOT EXCEED 2" DIAMETER WITHOUT ARBORIST DIRECTION. ALL TREES TO BE REMAIN AND PROTECTED. (35,852 SF +/-)
- CLEAR AND GRUB. REMOVE EXISTING LAWN/REFER TO IRRIGATION COMPONENTS TO BE RELOCATED AS NEEDED TO ENSURE HEAD TO HEAD COVERAGE. RELOCATE AS SHOWN ON IRRIGATION PLANS, SHEET L4.1-####. ALL TREES TO BE REMAIN AND PROTECTED. (2,025 SF +/-)
- CLEAR AND GRUB EXISTING LAWN BY HAND W/IN DRIPLINE. CLEAR AND GRUB REMOVAL WITHIN EXISTING TREE DRIPLINES SHALL NOT EXCEED 3" DEPTH. TREE ROOT REMOVAL SHALL NOT EXCEED 2" DIAMETER WITHOUT ARBORIST DIRECTION. IRRIGATION EQUIPMENT TO BE RELOCATED AS NEEDED TO ENSURE HEAD TO HEAD COVERAGE. ALL TREES TO BE PROTECTED. (5,441 SF +/-)
- EXISTING WALL
- EXISTING FENCE TO REMAIN, PROTECT IN PLACE
- PROPERTY LINE
- TPF — TREE PROTECTION FENCING
- CONSTRUCTION PROTECTION FENCE

SHEET NOTES (NOT ALL MAY APPEAR ON THIS SHEET)

1. EXISTING WALL TO BE REMOVED. (145 LF +/-)
2. EXISTING TREE TO BE PROTECTED IN PLACE. REFER TO TREE PROTECTION NOTES ON SHEET L1.0
3. EXISTING FENCE AND GATES TO REMAIN.
4. EXISTING SIGN TO REMAIN,
5. EXISTING SIGN TO BE REMOVED. TURN OVER TO PARKS DISTRICT REP. (2 EA)
6. EXISTING CREEK HEADWALL TO BE PROTECTED IN PLACE.
7. EXISTING METAL BOLLARDS TO BE REMOVED. (2 EA)
8. EXISTING WOODEN BOLLARDS TO BE REMOVED. (2 EA)
9. EXISTING STREET LIGHT POLES TO BE PROTECTED IN PLACE.
10. EXISTING IRRIGATION EQUIPMENT TO BE PROTECTED IN PLACE.
11. EXISTING HEADER BOARD TO REMAIN.
12. EXISTING TREE TO BE REMOVED. (1 EA)
13. PROTECTION FENCING AT TOP OF CREEK LIMITS
14. PUE
15. FUTURE PUE
16. EXISTING WALL TO REMAIN.

CREEK PRESERVATION NOTES

NOTES:

1. PRESERVE AND PROTECT ALL SOILS, PLANTS, AND EXISTING CONDITIONS WITHIN THE CREEK ZONE.
2. GENERAL CONTRACTOR SHALL INSTALL EROSION CONTROL MEASURES TO INSURE THE CREEK HABITAT IS NOT ENDANGERED, DAMAGED OR CHANGED IN AN WAY.
3. GENERAL CONTRACTOR SHALL ASSURE THAT ALL WORK ON THE PROEJCT SITE DOES NOT DISTURB SOIL OR PLANT MATERIAL WITHIN THE CREEK LIMITS

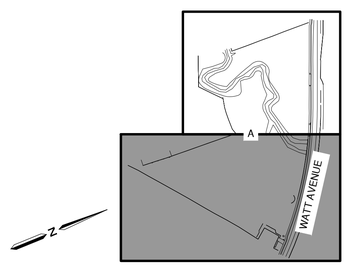

LOCATION MAP

1"=300'

SCALE: 1" = 30'

Know what's below. Call before you dig.

Westwood
Westwood Professional Services, Inc.
6200 STONERIDGE MALL ROAD, SUITE 330
PLEASANTON, CA 94588
T: 925.223.8340
westwoodps.com

NO.	DESCRIPTION	DATE	BY	APP. DATE	APP.

ANTELOPE, CALIFORNIA

NHRPD SIERRA CREEK PARK

7781 WATT AVE DEMOLITION PLAN

DATE: 08/31/26
DRAFTER: TH, AL, CY
DESIGNER: KF, TH
CHECKED: KF, JG
PROJECT NO. 41541

LICENSED LANDSCAPE ARCHITECT — KARIN N. FOLSOM — STATE OF CALIFORNIA
Signature
03/31/27 Renewal Date
08/31/26 Date

L1.1

Last Saved by: MALoucrecia
Plot Scale: 1:1 Plot Date: 8/31/2026 9:27 AM
Drawing: N:_OBE\Pleasanton\41541 NHRPD Sierra Creek Park\Landscape\ConstPlans\41541-DM

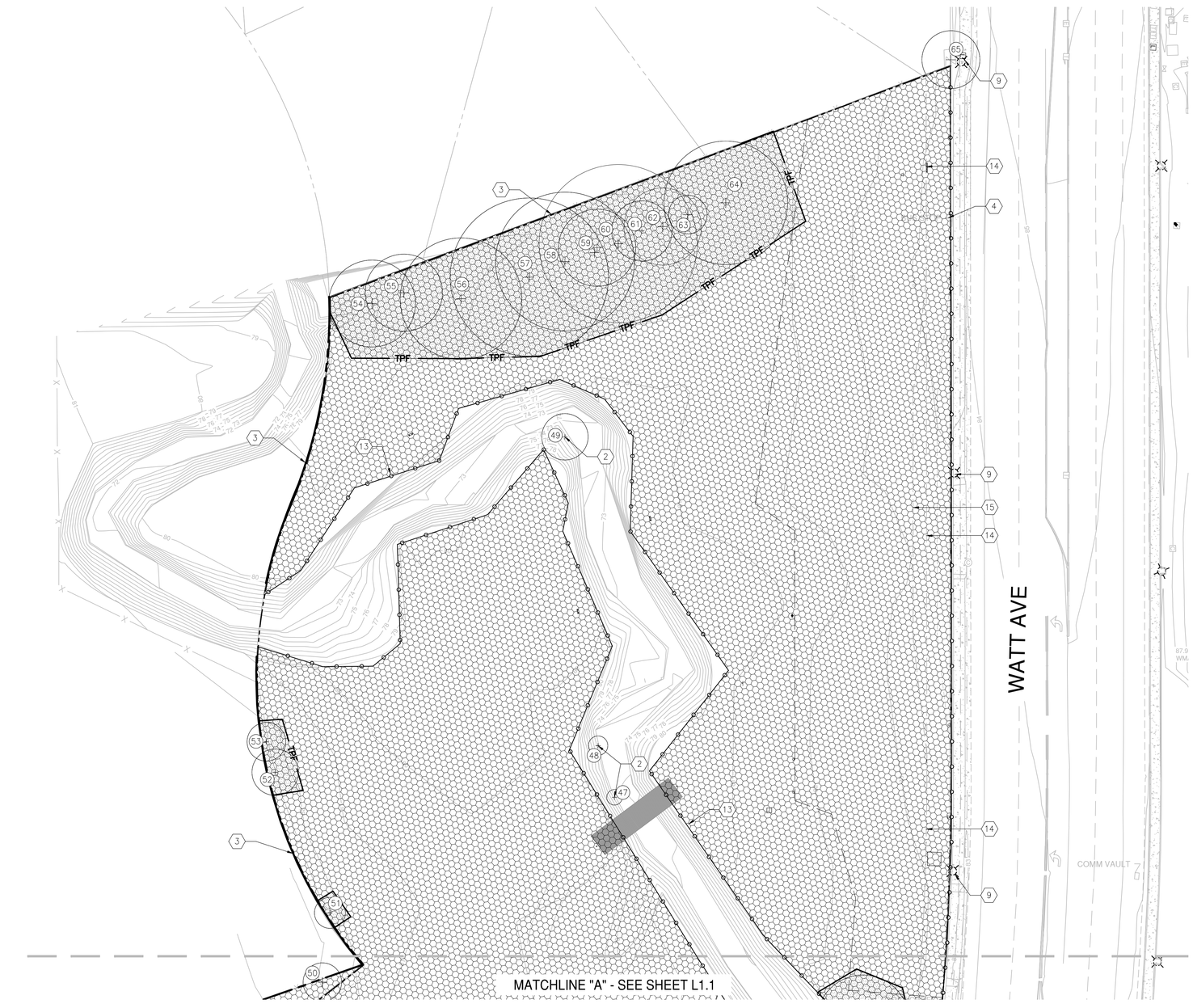

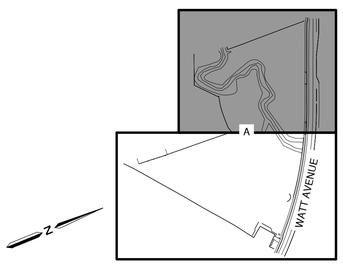

LOCATION MAP

1"=300'

SCALE: 1" = 30'

LEGEND

- EXISTING TREE TO BE REMOVED.
- EXISTING TREE TO BE PROTECTED IN PLACE.
- TREE NUMBER: REFER TO L1.0
- EXISTING LAWN TO REMAIN, PROTECT IN PLACE. REFER TO IRRIGATION PLAN.
- CLEAR AND GRUB. REMOVE PLANTS, WEEDS AND SURFACE MATERIALS, ALL TREES TO BE REMAIN AND PROTECTED. (219,433 SF +/-)
- CLEAR AND GRUB BY HAND W/IN DRIPLINE. CLEAR AND GRUB REMOVAL WITHIN EXISTING TREE DRIPLINES SHALL NOT EXCEED 3" DEPTH. TREE ROOT REMOVAL SHALL NOT EXCEED 2" DIAMETER WITHOUT ARBORIST DIRECTION. ALL TREES TO BE REMAIN AND PROTECTED. (35,852 SF +/-)
- CLEAR AND GRUB. REMOVE EXISTING LAWN/REFER TO IRRIGATION COMPONENTS TO BE RELOCATED AS NEEDED TO ENSURE HEAD TO HEAD COVERAGE. RELOCATE AS SHOWN ON IRRIGATION PLANS, SHEET L4.1-####. ALL TREES TO BE REMAIN AND PROTECTED. (2,025 SF +/-)
- CLEAR AND GRUB EXISTING LAWN BY HAND W/IN DRIPLINE. CLEAR AND GRUB REMOVAL WITHIN EXISTING TREE DRIPLINES SHALL NOT EXCEED 3" DEPTH. TREE ROOT REMOVAL SHALL NOT EXCEED 2" DIAMETER WITHOUT ARBORIST DIRECTION. IRRIGATION EQUIPMENT TO BE RELOCATED AS NEEDED TO ENSURE HEAD TO HEAD COVERAGE. ALL TREES TO BE PROTECTED. (5,441 SF +/-)
- EXISTING WALL
- EXISTING FENCE TO REMAIN, PROTECT IN PLACE
- PROPERTY LINE
- TPF — TREE PROTECTION FENCING
- CONSTRUCTION PROTECTION FENCE

SHEET NOTES (NOT ALL MAY APPEAR ON THIS SHEET)

1. EXISTING WALL TO BE REMOVED. (145 LF +/-)
2. EXISTING TREE TO BE PROTECTED IN PLACE. REFER TO TREE PROTECTION NOTES ON SHEET L1.0
3. EXISTING FENCE AND GATES TO REMAIN.
4. EXISTING SIGN TO REMAIN,
5. EXISTING SIGN TO BE REMOVED. TURN OVER TO PARKS DISTRICT REP. (2 EA)
6. EXISTING CREEK HEADWALL TO BE PROTECTED IN PLACE.
7. EXISTING METAL BOLLARDS TO BE REMOVED. (2 EA)
8. EXISTING WOODEN BOLLARDS TO BE REMOVED. (2 EA)
9. EXISTING STREET LIGHT POLES TO BE PROTECTED IN PLACE.
10. EXISTING IRRIGATION EQUIPMENT TO BE PROTECTED IN PLACE.
11. EXISTING HEADER BOARD TO REMAIN.
12. EXISTING TREE TO BE REMOVED. (1 EA)
13. PROTECTION FENCING AT TOP OF CREEK LIMITS
14. PUE
15. FUTURE PUE
16. EXISTING WALL TO REMAIN.

CREEK PRESERVATION NOTES

NOTES:

1. PRESERVE AND PROTECT ALL SOILS, PLANTS, AND EXISTING CONDITIONS WITHIN THE CREEK ZONE.
2. GENERAL CONTRACTOR SHALL INSTALL EROSION CONTROL MEASURES TO INSURE THE CREEK HABITAT IS NOT ENDANGERED, DAMAGED OR CHANGED IN AN WAY.
3. GENERAL CONTRACTOR SHALL ASSURE THAT ALL WORK ON THE PROEJCT SITE DOES NOT DISTURB SOIL OR PLANT MATERIAL WITHIN THE CREEK LIMITS

811 Know what's below. Call before you dig.

Westwood
Westwood Professional Services, Inc.
6200 STONERIDGE MALL ROAD, SUITE 330
PLEASANTON, CA 94588
T: 925.223.8340
wsinc.com

NO.	DESCRIPTION	DATE	BY	APP. DATE	APP.

ANTELOPE, CALIFORNIA

NHRPD SIERRA CREEK PARK

7781 WATT AVE DEMOLITION PLAN

DATE: 08/31/26
DRAFTER: TH, AL, CY
DESIGNER: KF, TH
CHECKED: KF, JG
PROJECT NO. 41541

LICENSED LANDSCAPE ARCHITECT — KARIN N. FOLSOM — STATE OF CALIFORNIA
Signature
03/31/27
Renewal Date
08/31/26
Date

L1.2

Last Saved by: MAlcantara
Plot Date/Time: 8/27/2026 9:58 AM
Drawing: N:_ODE\Pleasanton\41541 NRHPD Sierra Creek Park\Landscape\ConstPlans\41541-DM

GENERAL NOTES

1. COORDINATE INSTALLATION OF **SITE FURNISHINGS AND STRUCTURES** WITH OTHER WORK OF **GRADING, CONCRETE, AND ELECTRICAL**.
2. ALL SITE FURNISHINGS SHALL BE LOCATED AS SHOWN ON THE DRAWINGS, AND ASSEMBLED AND INSTALLED PER THE MANUFACTURER'S SPECIFICATIONS. SITE FURNISHING INSTALLATION SCHEDULE SHALL BE COORDINATED WITH OTHER CONTRACTORS TO AVOID CONFLICT AND POSSIBLE DAMAGE.
3. CONTRACTOR SHALL EXAMINE RELATED WORK AND SURFACES BEFORE STARTING WORK OF THIS SECTION AND SHOULD REPORT TO THE **LANDSCAPE ARCHITECT AND/OR DISTRICT** IN WRITING ANY CONDITIONS WHICH WILL PREVENT THE PROPER PROVISION OF WORK. BEGINNING THE WORK OF THIS SECTION WITHOUT REPORTING UNSUITABLE CONDITIONS CONSTITUTES ACCEPTANCE OF CONDITIONS. ANY REQUIRED REMOVAL, REPAIR OR REPLACEMENT OF WORK CAUSED BY UNSUITABLE CONDITIONS SHALL BE DONE AT NO ADDITIONAL COST TO THE **DISTRICT**.
4. CONTRACTOR SHALL PROVIDE CONSTRUCTION STAKING.
5. CONTRACTOR SHALL PROVIDE COMPACTION TESTING. REPORTS SHALL BE DELIVERED DIRECTLY FROM THE LAB TO THE OWNER OR OWNER REPRESENTATIVE.
6. ALL EARTHWORK, GRADING AND SOIL DELIVERY/REMOVAL SHALL BE PROVIDED BY THE CONTRACTOR.
7. ALL CONCRETE COLORS SHALL BE REVIEWED AND APPROVED BY **DISTRICT** PRIOR TO INSTALLATION.
8. INSTALL INTEGRAL COLOR CONCRETE MIX AT MANUFACTURER'S RECOMMENDED RATES FOR SPECIFIED COLORS LISTED ABOVE.
9. APPLY COLOR SEAL TO COLORED CONCRETE BY MEANS, RATE AND TIMING AS RECOMMENDED BY MANUFACTURER.
10. CONTRACTOR SHALL PROVIDE A 6'X6' POURED MOCK UP **CONCRETE PAVING–INTEGRAL COLOR**, FINISH AND JOINTING TO OWNER FOR REVIEW AND APPROVAL PRIOR TO INSTALLATION. THIS SAMPLE TO REMAIN UNTIL CONSTRUCTION HAS CONCLUDED.

REFER TO SPECIFICATIONS FOR FURTHER REQUIREMENTS.

PLAY EQUIPMENT NOTES

1. GENERAL CONTRACTOR SHALL COORDINATE INSTALLATION OF PLAY EQUIPMENT AND SAFETY SURFACING WITH OTHER WORK OF GRADING, CONCRETE, AND UTILITY INSTALLATIONS.
2. CONTRACTOR TO LAYOUT PLAY EQUIPMENT AND VERIFY FALL ZONES PRIOR TO INSTALLATION OF FOOTINGS AND PERIMETER HARDSCAPE.
3. POURED–IN–PLACE RUBBER SAFETY SURFACING TO INCLUDE ALIPHATIC BINDER.

REFERENCE SCHEDULE

ITEM	DESCRIPTION	REFERENCE
A	PATHWAY LIGHT POLE	SEE ELECTRICAL SHEETS
B	PARKING LOT LIGHT POLE	SEE ELECTRICAL SHEETS
C	VISION TRIANGLE	PER COUNTY STANDARD
D	REFER TO ELECTRICAL	SEE L2.2
E	SIERRA CREEK	
F	BIOSWALE	REFER TO CIVIL SHEETS
G	COMMUNITY GARDEN (FUTURE)	
H	DRAIN INLET	REFER TO CIVIL SHEETS
I	EXISTING WALL TO REMAIN	REFER TO TOPOGRAPHIC SURVEY
J	EXISTING FENCE AND GATES TO REMAIN	REFER TO TOPOGRAPHIC SURVEY
K	VAN ACCESSIBLE PARKING SIGN	SEE DETAIL 2 SHEET L6.4
L	ACCESSIBLE PARKING SIGN	REFER TO CIVIL SHEETS
M	LEFT TURN ONLY SIGN	REFER TO CIVIL SHEETS
N	PARKING LOT ENTRY SIGN	SEE DETAIL 1 SHEET L6.4

REFERENCE KEY

SCHEDULE KEY

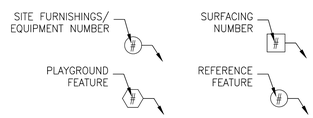

SECTION CUT

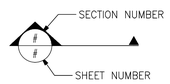

CONCRETE JOINT LEGEND

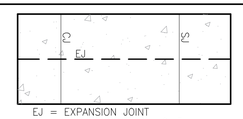

EJ = EXPANSION JOINT
SJ = TOOLED CONTROL JOINT
CJ = COLD JOINT

SITE FINISH SCHEDULE

FINISH	DESCRIPTION	COLOR	QUANTITY	PATTERN / INFORMATION	DET REF.
A	CONCRETE PAVING	NATURAL GREY	12,250 SF	MEDIUM BROOM FINISH	L6.0/1&2
B	CONCRETE PAVING –INTEGRAL COLOR	PEBBLE	7,120 SF	MEDIUM BROOM FINISH / DAVIS COLORS / DAVISCOLORS.COM / P: (800) 356–4848	L6.0/1&2
C	DECOMPOSED GRANITE	NATURAL GOLD	6,386 SF	GRANITECRETE / GRANITECRETE.COM	L6.0/5
D	ASPHALT PAVING (PARKING AND SERVICE ACCESS)	STANDARD	19,510 SF	PER CIVIL PLANS	–
E	ENGINEERED WOOD FIBER	NATURAL	5,103 SF	FIBAR SYSTEM, OR EQUAL	L6.0/7
F	GRAVEL SERVICE ROAD	TBD	510 SF	INSTALL PER DETAILS	L6.0/4
G	BARK MULCH (3" MIN. DEPTH)	NATURAL	10,650 SF	DISTRICT STANDARD	–
H	CONCRETE PAVING (VEHICULAR ACCESS)	MATCH EXISTING	2,400 SF	MEDIUM BROOM FINISH	L6.0/1&2
I	PLANTING AREA, SEE PLANTING PLANS, SHEETS L5.0–L5.2				
J	SAFETY SURFACING (PIP RUBBER)	BROWN 50%/ BEIGE 50%	4,309 SF	SURFACE AMERICA	L6.0/2, 6,8&9
K	COLORED CONCRETE (VEHICULAR ACCESS)	PEBBLE	620 SF	MEDIUM BROOM FINISH / DAVIS COLORS / DAVISCOLORS.COM / P: (800) 356–4848	L6.0/1&2

PLAYGROUND FEATURE SCHEDULE

ITEM	DESCRIPTION / MODEL	COLOR	QUANTITY	MANUFACTURER/SUPPLIER/CONTACT INFORMATION	DET.REF.
1	XSCAPE 2–BAY SWING	COLORS SHOWN IN RENDERING, SEE L2.3	1	MRC RECREATION QUOTE #115244–05–01, CONTACT KELLY OAKES, P: (800) 922–0070, EMAIL: KOAKES@MRCREC.COM	PER MANUF.
2	ARCH SWING (GALV)		1		
3	INCLUSIVE SEESAW		1		
4	CUSTOM PRIMETIME PLAY STRUCTURE (2–5 YRS)		1		
5	TURTLE SPRING RIDER		1		
6	CUSTOM POWERSCAPE PLAY STRUCTURE (5–12 YRS)		1		
7	VISTATREE TOP 1		1		
8	SENSORY WAVE SEAT		1		
9	ROCKIN' ROBIN		1		
10	64" ROLLERSLIDE W/ EXIT TRANSFER BENCH	TBD	1	LANDSCAPE STRUCTURES / CP006960 / 707–538–3800	L6.1/2
11	SHADOW PLAY FLOWER	SEE BELOW	1	MRC RECREATION QUOTE #115244–05–01, CONTACT KELLY OAKES, P: (800) 922–0070, EMAIL: KOAKES@MRCREC.COM	PER MANUF.
12	MUSICAL EQUIPMENT	CATERPILLAR FLOWER– TURQUOISE BUTTERFLY– ORANGE		FREENOTE	

SITE FEATURE SCHEDULE

ITEM	DESCRIPTION / MODEL	COLOR	QUANTITY	MANUFACTURER / SUPPLIER / INFORMATION	DET REF.
1	BACKED BENCH 6' / MODEL # 424	TIERRA	7 EA	OUTDOOR CREATIONS / CHAD SMITH / P: (530) 365–6106	L6.3/1
2	BACKLESS BENCH 6' / MODEL # 402	TIERRA	6 EA		L6.3/2
3	PICNIC TABLE / MODEL # 101FSSK	TIERRA	10 EA		L6.3/5
4	PICNIC TABLE ADA / MODEL # 101FSSK RE	TIERRA	3 EA		L6.3/6
5	ROUND TABLE ADA / MODEL # 107AC	TIERRA	1 EA		L6.3/4
6	CUSTOM PARK SIGN	HUNTER GREEN / SAN DIEGO BUFF	1 EA		L6.2/6
7	BBQ – SINGLE / MODEL # 21	BLACK	1 EA	DUMOR / DUMOR.COM / P: (800) 598–4018	L6.3/3
8	BBQ – GROUP / MODEL # 24	BLACK	1 EA		L6.3/3 SIM
9	BIKE RACK / MODEL # 292 (S–2)	SUDAN	4 EA		L6.0/11 & L6.4/3
10	BOLLARD – REMOVABLE / MODEL # 400–42–2–1SL	BLACK	3		L6.4/6
11	TRASH RECEPTACLE / MODEL # CE140MB–FP	FIR GREEN / TRASH LABEL	5 EA	BEARSAVER / WWW.BEARSAVER.COM	L6.3/7
12	RECYCLING RECEPTACLE / MODEL # CE140MB–FP	SKY BLUE / RECYCLING LABEL	5 EA		L6.3/7
13	BIKE LOCKER / MODEL # VSI1–GRY14–REVB	GREY	2	GROUND CONTROL SYSTEMS / NIKO GONZALEZ / P: (209) 275–8051	L6.4/3
14	PET STATION / MODEL # 1003A–L	FOREST GREEN	1	DOG–I–POT / DOGIPOT.COM / P: (800) 364–7681	L6.4/5
15	DRINKING FOUNTAIN / MODEL # 440 SMFA W/ PET FOUNTAIN	GREEN	2 EA	MOST DEPENDABLE FOUNTAINS / ANGELA HORNE / P: (901) 867–0039	L6.2/7
16	CONCRETE MOW BAND – 12"	TROWEL FINISH / MATCH ADJACENT	900 LF	INSTALL PER DETAILS	L6.0/3
17	ROUND TABLE STANDARD MODEL # 107S	TIERRA	1 EA	OUTDOOR CREATIONS / CHAD SMITH / P: (530) 365–6106	L6.3/4
18	DEEPENED PLAYGROUND EDGE	MATCH ADJACENT	500 LF	INSTALL PER DETAILS	L6.0/6,8&9
19	NOT USED				
20	CONCRETE RETAINING WALL AT AMPHITHEATER	SANDBLAST FINISH / NATURAL GREY	130 LF		L6.1/3
21	CONCRETE SEATWALL	SANDBLAST FINISH / INTEGRAL COLOR	20 LF		L6.1/4
22	BRIDGE 10' WIDE – CONNECTOR PEDESTRIAN TRUSS	WEATHERED STEEL / CONCRETE	1 EA	CONTACT BRIDGE BROTHERS FOR ENGINEERED DRAWINGS FOR DEFERRED SUBMITTAL DATED 04/01/2025, CONTACT AARON GENTILUCCI. P: (866) 258–3401, EMAIL: AGENTILUCCI@BRIDGEBROTHERSINC.COM	–
23	PILASTER	MATCH SIGN	12 EA	INSTALL PER DETAILS	L6.2/5
24	FENCE – 4' TUBULAR STEEL WITH 18" MOW BAND	POWDERCOAT BLACK	626 LF	AMERISTAR OR EQUAL	L6.2/4
25	FENCE – 5' TUBULAR STEEL WITH 12" MOW BAND	POWDERCOAT BLACK	297 LF		L6.2/1
26	GATE PEDESTRIAN – 5' TUBULAR STEEL	POWDERCOAT BLACK	1 EA		L6.2/3
27	GATE VEHICULAR – 5' TUBULAR STEEL	POWDERCOAT BLACK	1 EA		L6.2/2
28	SHADE STRUCTURE (GARDEN) / MODEL # RAM12X22MR	BUCKSKIN/UPTOWN BRONZE	1 EA	MIRACLEPLAY / SHANA / EMAIL: SHANA@MIRACLEPLAYSYSTEMS.COM	L6.5/3
29	SHADE STRUCTURE (PICNIC) / MODEL # OTC40MR	BUCKSKIN/UPTOWN BRONZE	1 EA		L6.5/2
30	SHADE STRUCTURE (AMPHITHEATER) / MODEL # HHA32MR	BUCKSKIN/UPTOWN BRONZE	1 EA		L6.5/1
31	RESTROOM BUILDING – OWNER PROVIDED	SEE DETAIL	1 EA	PUBLIC RESTROOM COMPANY / STEVE MYLER / P: (888) 888–2060 EXT 103	L6.6/1
32	INTERPRETIVE SIGNAGE	SEE DETAIL	3	ENVIRONSIGNS / JOHN PETERS / P: (888) 492–5377 EXT 1	L6.4/8
33	FITNESS EQUIPMENT – 3 PERSON STATIC COMBO – #SGR071	GREEN	1 EA	GREENFIELDS EQUIPMENT / GFOUTDOORFITNESS.COM	PER MANUF.
34	FITNESS EQUIPMENT – ELLIPTICAL CROSS TRAINER – #SHP503	GREEN	1 EA		PER MANUF.
35	FITNESS EQUIPMENT – 2 PERSON ACCESSIBLE SHOULDER WHEEL – #UBX286	GREEN	1 EA		PER MANUF.
36	CONCRETE PERIMETER BAND AT EWF SURFACING	TROWEL FINISH / MATCH ADJACENT	172 LF	INSTALL PER DETAIL	L6.0/6 SIM
37	NOT USED				L6.1/1
38	CULVERT	SEE DETAIL	1 EA		
39	GATE	SEE DETAIL	1 EA	CONTRACTOR TO PROVIDE SHOP DRAWINGS	L6.3/8
40	VERTICAL CURB / RETAINING WALL	SEE DETAIL	27 LF	INSTALL PER DETAIL	L6.0/12
41	PROPOSITION 68 SIGN	SEE DETAIL	1 EA		L6.4/7
42	VERTICAL CURB WITH HANDRAIL	SEE DETAIL	30 LF		L6.1/5
43	CONCRETE RETAINING WALL AT RESTROOM	SANDBLAST FINISH / NATURAL GREY	30 LF		L6.1/3 SIM
44	6" TYPE 3 FREESTANDING CURB	TROWEL FINISH / MATCH ADJACENT	1,211 LF		L6.0/13
45	CONCRETE BAND AT FITNESS AREA	TROWEL FINISH / MATCH ADJACENT	71 LF		L6.0/10

811 Know what's **below.** **Call** before you dig.

Westwood
Westwood Professional Services, Inc.
6200 STONERIDGE MALL ROAD, SUITE 330
PLEASANTON, CA 94588
T: 925.223.8340
westwoodps.com

NO.	DESCRIPTION	DATE	BY	APP. DATE	APP.

ANTELOPE, CALIFORNIA

NHRPD SIERRA CREEK PARK

7781 WATT AVE

SITE FEATURES LEGEND & NOTES

DATE: 08/31/26
DRAFTER: TH, AL, CY
DESIGNER: KF, TH
CHECKED: KF, JG
PROJECT NO. **41541**

LICENSED LANDSCAPE ARCHITECT — JOHN N. FOLSOM — Signature — 03/31/27 Renewal Date — 08/31/26 Date — STATE OF CALIFORNIA

L2.0

Last Saved by: MAJourneay
Plot Scale: 1:1 Plot Date: 8/26/2026 9:37 AM
Drawing: N:_CIDE\Pleasanton\41541 NRHPD Sierra Creek Park\Landscape\ConstPlans\41541-SF

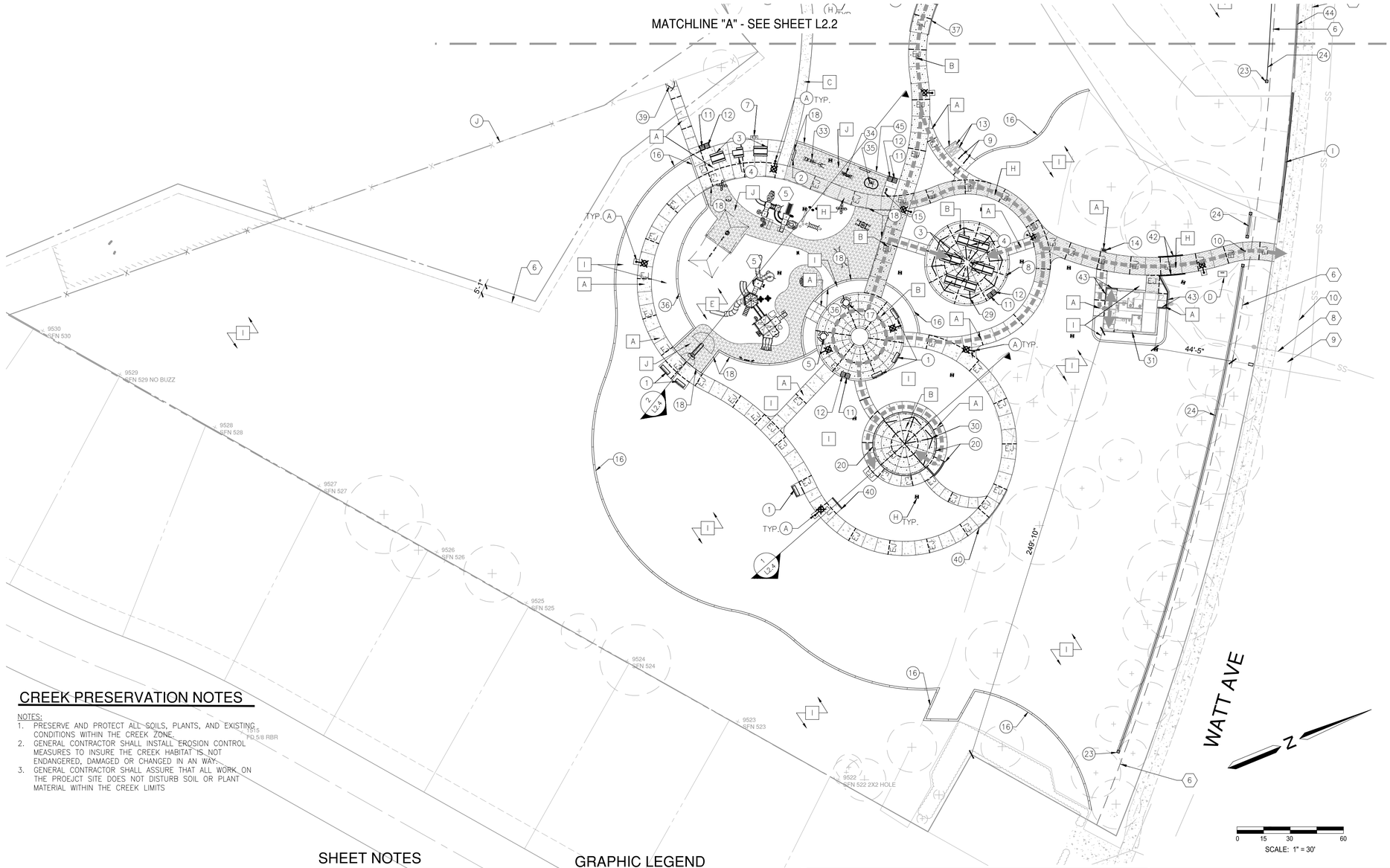

CREEK PRESERVATION NOTES

NOTES:

1. PRESERVE AND PROTECT ALL SOILS, PLANTS, AND EXISTING CONDITIONS WITHIN THE CREEK ZONE.
2. GENERAL CONTRACTOR SHALL INSTALL EROSION CONTROL MEASURES TO INSURE THE CREEK HABITAT IS NOT ENDANGERED, DAMAGED OR CHANGED IN AN WAY.
3. GENERAL CONTRACTOR SHALL ASSURE THAT ALL WORK ON THE PROEJCT SITE DOES NOT DISTURB SOIL OR PLANT MATERIAL WITHIN THE CREEK LIMITS

SHEET NOTES

1. BIOFILTRATION AREA WITH PLANTING, SEE 11/L6.0
2. COMMUNITY GARDEN
3. PARKING LOT
4. SIERRA CREEK
5. PLAY AREA
6. PUE
7. FUTURE PUE
8. SEWER LIME
9. WATER LINE
10. STORM DRAIN LINE

GRAPHIC LEGEND

- ACCESSIBLE ROUTE TO ADA FACILITY
- EXISTING TREE TO REMAIN
- PROPERTY LINE

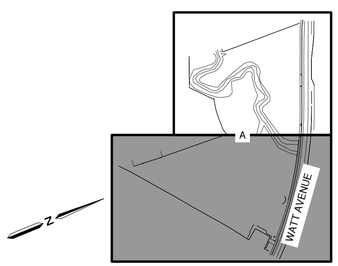

LOCATION MAP

1"=300'

REFERENCE SCHEDULE

ITEM	DESCRIPTION	REFERENCE
A	PATHWAY LIGHT POLE	SEE ELECTRICAL SHEETS
B	PARKING LOT LIGHT POLE	SEE ELECTRICAL SHEETS
C	VISION TRIANGLE	PER COUNTY STANDARD
D	REFER TO ELECTRICAL	SEE L2.2
E	SIERRA CREEK	
F	BIOSWALE	REFER TO CIVIL SHEETS
G	COMMUNITY GARDEN (FUTURE)	
H	DRAIN INLET	REFER TO CIVIL SHEETS
I	EXISTING WALL TO REMAIN	REFER TO TOPOGRAPHIC SURVEY
J	EXISTING FENCE AND GATES TO REMAIN	REFER TO TOPOGRAPHIC SURVEY
K	VAN ACCESSIBLE PARKING SIGN	SEE DETAIL 2 SHEET L6.4
L	ACCESSIBLE PARKING SIGN	REFER TO CIVIL SHEETS
M	LEFT TURN ONLY SIGN	REFER TO CIVIL SHEETS
N	PARKING LOT ENTRY SIGN	SEE DETAIL 1 SHEET L6.4

SITE FINISH SCHEDULE

(NOT ALL MAY APPEAR ON THIS SHEET)

FINISH	DESCRIPTION
A	CONCRETE PAVING
B	CONCRETE PAVING –INTEGRAL COLOR
C	DECOMPOSED GRANITE
D	ASPHALT PAVING (PARKING AND SERVICE ACCESS)
E	ENGINEERED WOOD FIBER
F	GRAVEL SERVICE ROAD
G	BARK MULCH
H	CONCRETE PAVING (VEHICULAR ACCESS)
I	PLANTING AREA, SEE PLANTING PLANS, SHEETS L5.0–L5.2
J	SAFETY SURFACING (PIP RUBBER)
K	COLORED CONCRETE (VEHICULAR ACCESS)

SITE FEATURE SCHEDULE

(NOT ALL MAY APPEAR ON THIS SHEET)

ITEM	DESCRIPTION / MODEL
1	BACKED BENCH 6' / MODEL # 424
2	BACKLESS BENCH 6' / MODEL # 402
3	PICNIC TABLE / MODEL # 101FSSK
4	PICNIC TABLE ADA / MODEL # 101FSSKRE
5	ROUND TABLE ADA / MODEL # 107AC
6	CUSTOM PARK SIGN
7	BBQ – SINGLE / MODEL # 21
8	BBQ – GROUP / MODEL # 24
9	BIKE RACK / MODEL # 292 (S–2)
10	BOLLARD – REMOVABLE / MODEL # 400–42–2–1SL
11	TRASH RECEPTACLE / MODEL # CE140MB–FP
12	RECYCLING RECEPTACLE / MODEL # CE140MB–FP
13	BIKE LOCKER / MODEL # VISI1–GRY14–REVB
14	PET STATION / MODEL # 1003A–L
15	DRINKING FOUNTAIN / MODEL # 440 SM W/ PET FOUNTAIN
16	CONCRETE MOW BAND – 12"
17	ROUND TABLE STANDARD MODEL #107
18	DEEPENED PLAYGROUND EDGE
19	NOT USED
20	CONCRETE RETAINING WALL AT AMPHITHEATER
21	CONCRETE SEATWALL ENTRY
22	BRIDGE 10' WIDE – CONNECTOR PEDESTRIAN TRUSS
23	PILASTER
24	FENCE – 4' TUBULAR STEEL WITH 18" CONCRETE MOW BAND
25	FENCE – 5' TUBULAR STEEL WITH 12" CONCRETE MOW BAND
26	GATE PEDESTRIAN – 5' TUBULAR STEEL
27	DOUBLE SWING FENCE – 5' TUBULAR STEEL
28	SHADE STRUCTURE (GARDEN) / MODEL # RAM12X22MR
29	SHADE STRUCTURE (PICNIC) / MODEL # OTC40MR
30	SHADE STRUCTURE (AMPHITHEATER) / MODEL # HHA32MR
31	RESTROOM BUILDING
32	INTERPRETIVE SIGNAGE
33	FITNESS EQUIPMENT – 3 PERSON STATIC COMBO
34	FITNESS EQUIPMENT – ELLIPTICAL CROSS TRAINER
35	FITNESS EQUIPMENT – SHOULDER WHEEL STRETCHING STATION
36	CONCRETE PERIMETER BAND AT EWF SURFACING
37	NOT USED
38	CULVERT
39	GATE
40	VERTICAL CURB / RETAINING WALL
41	PROPOSITION 68 SIGN
42	CURB WITH HANDRAIL
43	CONCRETE RETAINING WALL AT RESTROOM
44	6" TYPE C FREESTANDING CURB
45	CONCRETE BAND AT FITNESS AREA

Know what's **below.** **Call** before you dig.

Westwood
Westwood Professional Services, Inc.
6200 STONERIDGE MALL ROAD, SUITE 330
PLEASANTON, CA 94588
T: 925.223.8340
westwoodps.com

NO.	DESCRIPTION	DATE	BY	APP. DATE	APP.

ANTELOPE, CALIFORNIA

NHRPD SIERRA CREEK PARK

7781 WATT AVE
SITE FEATURES PLAN

DATE: 08/31/26
DRAFTER: TH, AL, CY
DESIGNER: KF, TH
CHECKED: KF, JG

PROJECT NO.
41541

LICENSED LANDSCAPE ARCHITECT
KARIN N. FOLSOM
Signature
03/31/27
Renewal Date
08/31/26
Date
STATE OF CALIFORNIA

L2.1

Last Saved by: MALoucinco
Plot Scale: 1:1 Plot Date: 8/26/2026 11:38 AM
Drawing: N:_ODE\Pleasanton\41541 NRHPD Sierra Creek Park\Landscape\Cons\Plans\41541-SF

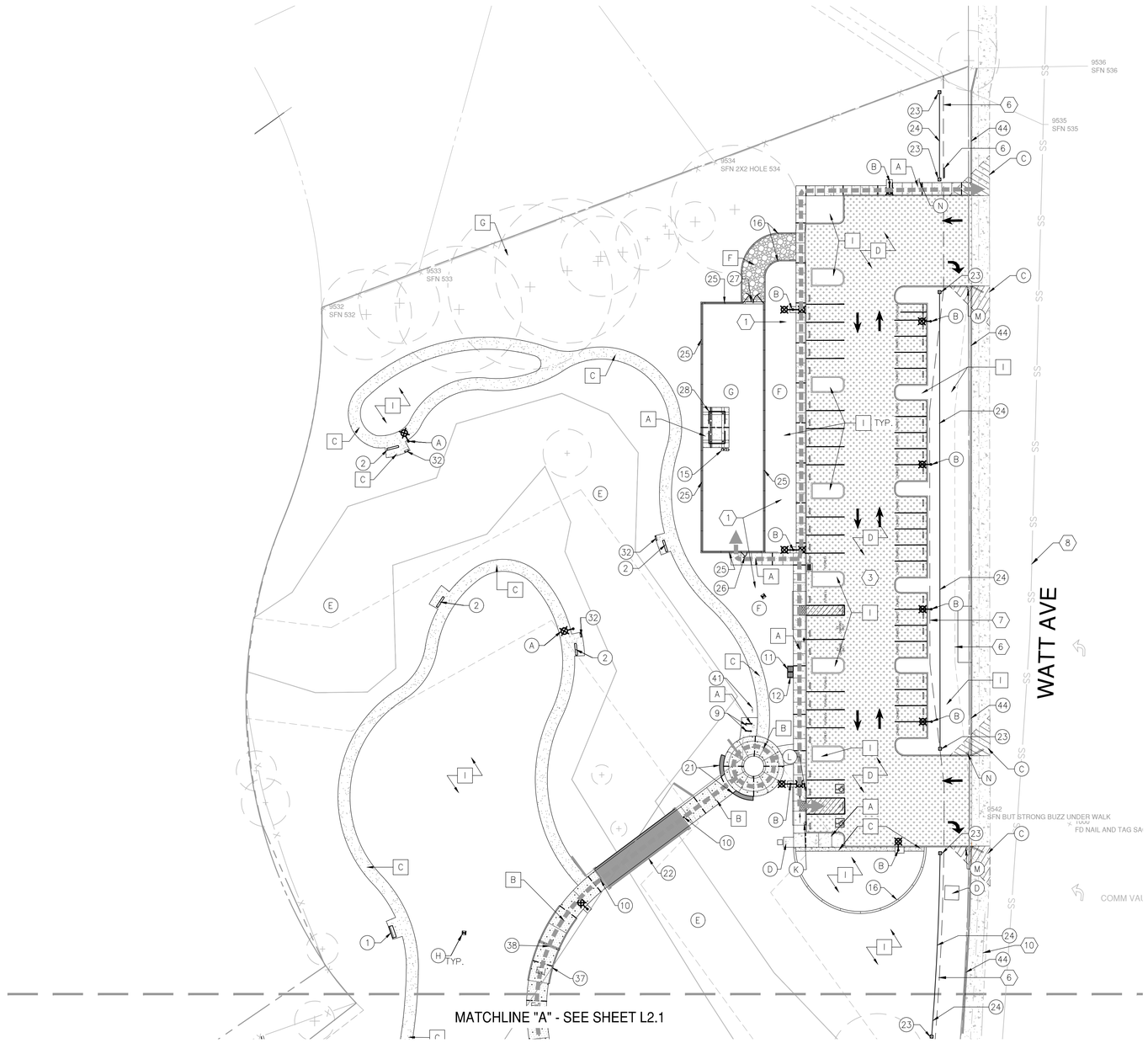

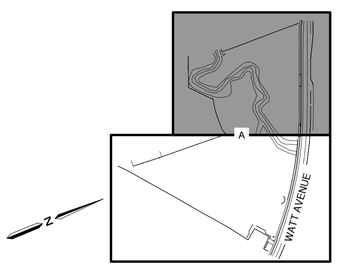

LOCATION MAP

1"=300'

SCALE: 1" = 30'

SITE FINISH SCHEDULE
(NOT ALL MAY APPEAR ON THIS SHEET)

FINISH	DESCRIPTION
A	CONCRETE PAVING
B	CONCRETE PAVING –INTEGRAL COLOR
C	DECOMPOSED GRANITE
D	ASPHALT PAVING (PARKING AND SERVICE ACCESS)
E	ENGINEERED WOOD FIBER
F	GRAVEL SERVICE ROAD
G	BARK MULCH
H	CONCRETE PAVING (VEHICULAR ACCESS)
I	PLANTING AREA, SEE PLANTING PLANS, SHEETS L5.0–L5.2
J	SAFETY SURFACING (PIP RUBBER)
K	COLORED CONCRETE (VEHICULAR ACCESS)

REFERENCE SCHEDULE

ITEM	DESCRIPTION	REFERENCE
A	PATHWAY LIGHT POLE	SEE ELECTRICAL SHEETS
B	PARKING LOT LIGHT POLE	SEE ELECTRICAL SHEETS
C	VISION TRIANGLE	PER COUNTY STANDARD
D	REFER TO ELECTRICAL	SEE L2.2
E	SIERRA CREEK	
F	BIOSWALE	REFER TO CIVIL SHEETS
G	COMMUNITY GARDEN (FUTURE)	
H	DRAIN INLET	REFER TO CIVIL SHEETS
I	EXISTING WALL TO REMAIN	REFER TO TOPOGRAPHIC SURVEY
J	EXISTING FENCE AND GATES TO REMAIN	REFER TO TOPOGRAPHIC SURVEY
K	VAN ACCESSIBLE PARKING SIGN	SEE DETAIL 2 SHEET L6.4
L	ACCESSIBLE PARKING SIGN	REFER TO CIVIL SHEETS
M	LEFT TURN ONLY SIGN	REFER TO CIVIL SHEETS
N	PARKING LOT ENTRY SIGN	SEE DETAIL 1 SHEET L6.4

GRAPHIC LEGEND

ACCESSIBLE ROUTE TO ADA FACILITY

EXISTING TREE TO REMAIN

PROPERTY LINE

SHEET NOTES

1. BIOFILTRATION AREA WITH PLANTING, SEE 11/L6.0
2. COMMUNITY GARDEN
3. PARKING LOT
4. SIERRA CREEK
5. PLAY AREA
6. PUE
7. FUTURE PUE
8. SEWER LINE
9. WATER LINE
10. STORM DRAIN LINE

SITE FEATURE SCHEDULE
(NOT ALL MAY APPEAR ON THIS SHEET)

ITEM	DESCRIPTION / MODEL
1	BACKED BENCH 6' / MODEL # 424
2	BACKLESS BENCH 6' / MODEL # 402
3	PICNIC TABLE / MODEL # 101FSSK
4	PICNIC TABLE ADA / MODEL # 101FSSKRE
5	ROUND TABLE ADA / MODEL # 107AC
6	CUSTOM PARK SIGN
7	BBQ – SINGLE / MODEL # 21
8	BBQ – GROUP / MODEL # 24
9	BIKE RACK / MODEL # 292 (S–2)
10	BOLLARD – REMOVABLE / MODEL # 400–42–2–1SL
11	TRASH RECEPTACLE / MODEL # CE140MB–FP
12	RECYCLING RECEPTACLE / MODEL # CE140MB–FP
13	BIKE LOCKER / MODEL # VISI1–GRY14–REVB
14	PET STATION / MODEL # 1003A–L
15	DRINKING FOUNTAIN / MODEL # 440 SM W/ PET FOUNTAIN
16	CONCRETE MOW BAND – 12"
17	ROUND TABLE STANDARD MODEL #107
18	DEEPENED PLAYGROUND EDGE
19	NOT USED
20	CONCRETE RETAINING WALL AT AMPHITHEATER
21	CONCRETE SEATWALL ENTRY
22	BRIDGE 10' WIDE – CONNECTOR PEDESTRIAN TRUSS
23	PILASTER
24	FENCE – 4' TUBULAR STEEL WITH 18" CONCRETE MOW BAND
25	FENCE – 5' TUBULAR STEEL WITH 12" CONCRETE MOW BAND
26	GATE PEDESTRIAN – 5' TUBULAR STEEL
27	DOUBLE SWING FENCE – 5' TUBULAR STEEL
28	SHADE STRUCTURE (GARDEN) / MODEL # RAM12X22MR
29	SHADE STRUCTURE (PICNIC) / MODEL # OTC40MR
30	SHADE STRUCTURE (AMPHITHEATER) / MODEL # HHA32MR
31	RESTROOM BUILDING
32	INTERPRETIVE SIGNAGE
33	FITNESS EQUIPMENT – 3 PERSON STATIC COMBO
34	FITNESS EQUIPMENT – ELLIPTICAL CROSS TRAINER
35	FITNESS EQUIPMENT – SHOULDER WHEEL STRETCHING STATION
36	CONCRETE PERIMETER BAND AT EWF SURFACING
37	NOT USED
38	CULVERT
39	GATE
40	VERTICAL CURB / RETAINING WALL
41	PROPOSITION 68 SIGN
42	CURB WITH HANDRAIL
43	CONCRETE RETAINING WALL AT RESTROOM
44	6" TYPE C FREESTANDING CURB
45	CONCRETE BAND AT FITNESS AREA

Know what's **below.**
Call before you dig.

Westwood
Westwood Professional Services, Inc.
6200 STONERIDGE MALL ROAD, SUITE 330
PLEASANTON, CA 94588
T: 925.223.8340
westwoodps.com

NO.	DESCRIPTION	DATE	BY	APP. DATE	APP.

ANTELOPE, CALIFORNIA

NHRPD SIERRA CREEK PARK
7781 WATT AVE
SITE FEATURES PLAN

DATE: 08/31/26
DRAFTER: TH, AL, CY
DESIGNER: KF, TH
CHECKED: KF, JG

PROJECT NO.
41541

LICENSED LANDSCAPE ARCHITECT
KAREN N. FOLSOM
Signature
03/31/27
Renewal Date
08/31/26
Date
STATE OF CALIFORNIA

L2.2

Last Saved by: MALucero
Plot Date: Wednesday, September 17, 2025 11:39 AM
Drawing: N:_CDE\Pleasanton\41541 NRHPD Sierra Creek Park\Landscape\Const\Plans\41541-SF

PLAYGROUND FEATURE SCHEDULE

ITEM	DESCRIPTION / MODEL	COLOR	QUANTITY	MANUFACTURER/SUPPLIER/CONTACT INFORMATION	DET.REF.
1	XSCAPE 2-BAY SWING	SEE BELOW	1	MRC RECREATION / RDU/ 800-922-0070	PER MANUF.
2	ARCH SWING (GALV)		1	MRC RECREATION / 5058/ 800-922-0070	
3	INCLUSIVE SEESAW		1	MRC RECREATION / 6299 / 800-922-0070	
4	CUSTOM PRIMETIME PLAY STRUCTURE (2-5 YRS)		1	MRC RECREATION / RDU / 800-922-0070	
5	TURTLE SPRING RIDER		1	MRC RECREATION / 6284I / 800-922-0070	
6	CUSTOM POWERSCAPE PLAY STRUCTURE (5-12 YRS)		1	MRC RECREATION / RDU / 800-922-0070	
7	VISTATREE TOP 1		1	MRC RECREATION / 5958SP / 800-922-0070	
8	ROCKIN' ROBIN		1	MRC RECREATION / 38020 / 800-922-0070	
9	64" ROLLERSLIDE W/ EXIT TRANSFER BENCH	TBD	1	LANDSCAPE STRUCTURES / CP006960 / 707-538-3800	
10	SHADOW PLAY FLOWER	SEE BELOW	1	MRC RECREATION / FREENOTES / 800-922-0070	
11	MUSICAL EQUIPMENT (CATERPILLAR, FLOWER, BUTTERFLY)	CATERPILLAR- FLOWER- TURQUOISE BUTTERFLY- ORANGE			

GENERAL NOTES

1. GENERAL CONTRACTOR SHALL COORDINATE INSTALLATION OF PLAY EQUIPMENT AND SAFETY SURFACING WITH OTHER WORK OF GRADING, CONCRETE, AND UTILITY INSTALLATIONS.
2. CONTRACTOR TO LAYOUT PLAY EQUIPMENT AND VERIFY FALL ZONES PRIOR TO INSTALLATION OF FOOTINGS AND PERIMTER HARDSCAPE.
3. POURED-IN-PLACE RUBBER SAFETY SURFACING TO INCLUDE ALIPHATIC BINDER.

COLOR SELECTION EXHIBIT

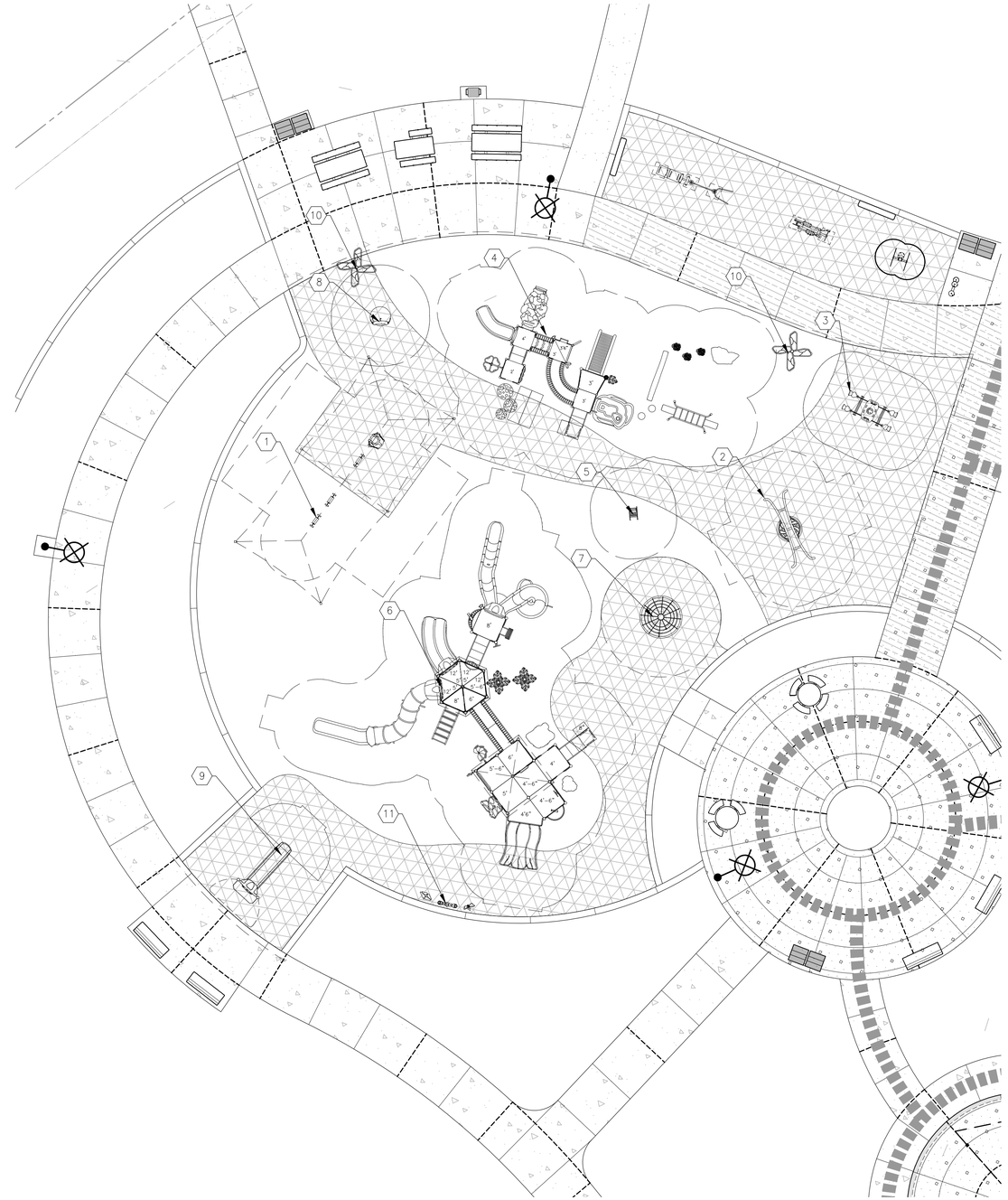
1
2
3
4
5
6
7
8
9
10
11
4'-6"
4'-6"
4'-6"

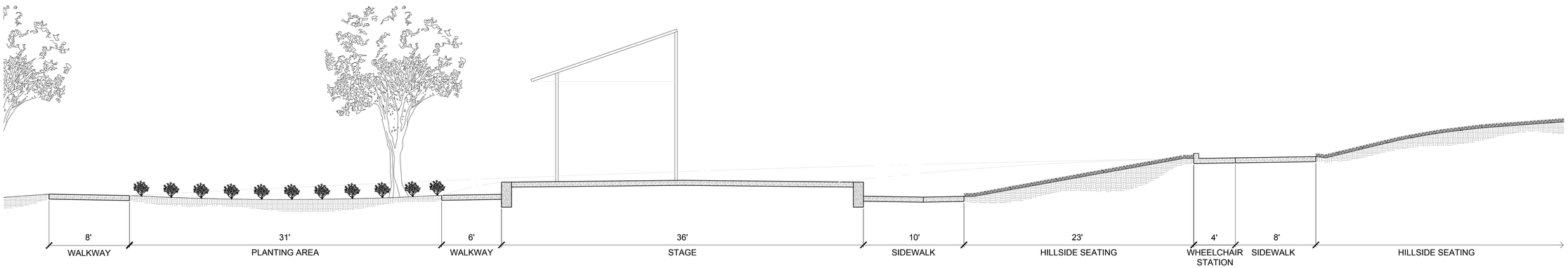

1 AMPHITHEATER SECTION

1" = 5'-0"

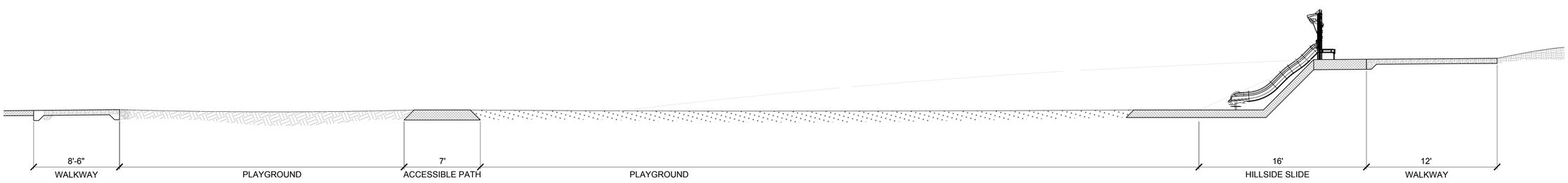

2 PLAYGROUND SECTION

1"=5'-0"

1. CONCRETE WALKWAY
2. 12" DEEPENED CONCRETE MOW BAND
3. POUR-IN-PLACE RUBBER SURFACING
4. ENGINEERED WOOD FIBAR
5. PLANTING AREA

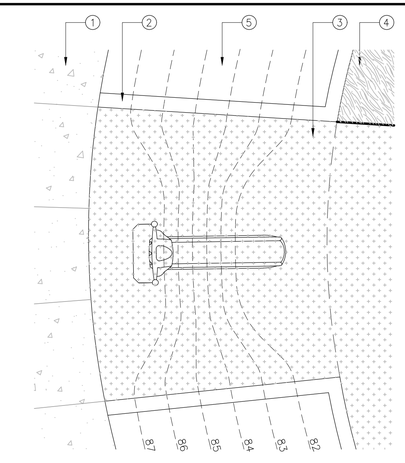

3 SLIDE GRADING ENLARGEMENT

NOT TO SCALE

811 Know what's below. Call before you dig.

Last Saved by: ALiao
Plot Date: Wednesday, 8/20/2026 9:03 AM
Drawing: N:_CIDE\Pleasanton\41541 NRHPD Sierra Creek Park\Landscape\ConstPlans\41541-SF

Westwood
Westwood Professional Services, Inc.
6200 STONERIDGE MALL ROAD, SUITE 330
PLEASANTON, CA 94588
T: 925.223.8340
westwoodps.com

NO.	DESCRIPTION	DATE	BY	APP. DATE	APP.

ANTELOPE, CALIFORNIA

NHRPD SIERRA CREEK PARK

7781 WATT AVE

SECTIONS & ELEVATIONS PLAN

DATE: 08/31/26
DRAFTER: TH, AL, CY
DESIGNER: KF, TH
CHECKED: KF, JG

PROJECT NO.
41541

LICENSED LANDSCAPE ARCHITECT
KARIN N. FOLSOM
Signature
03/31/27
Renewal Date
08/31/26
Date
STATE OF CALIFORNIA

L2.4

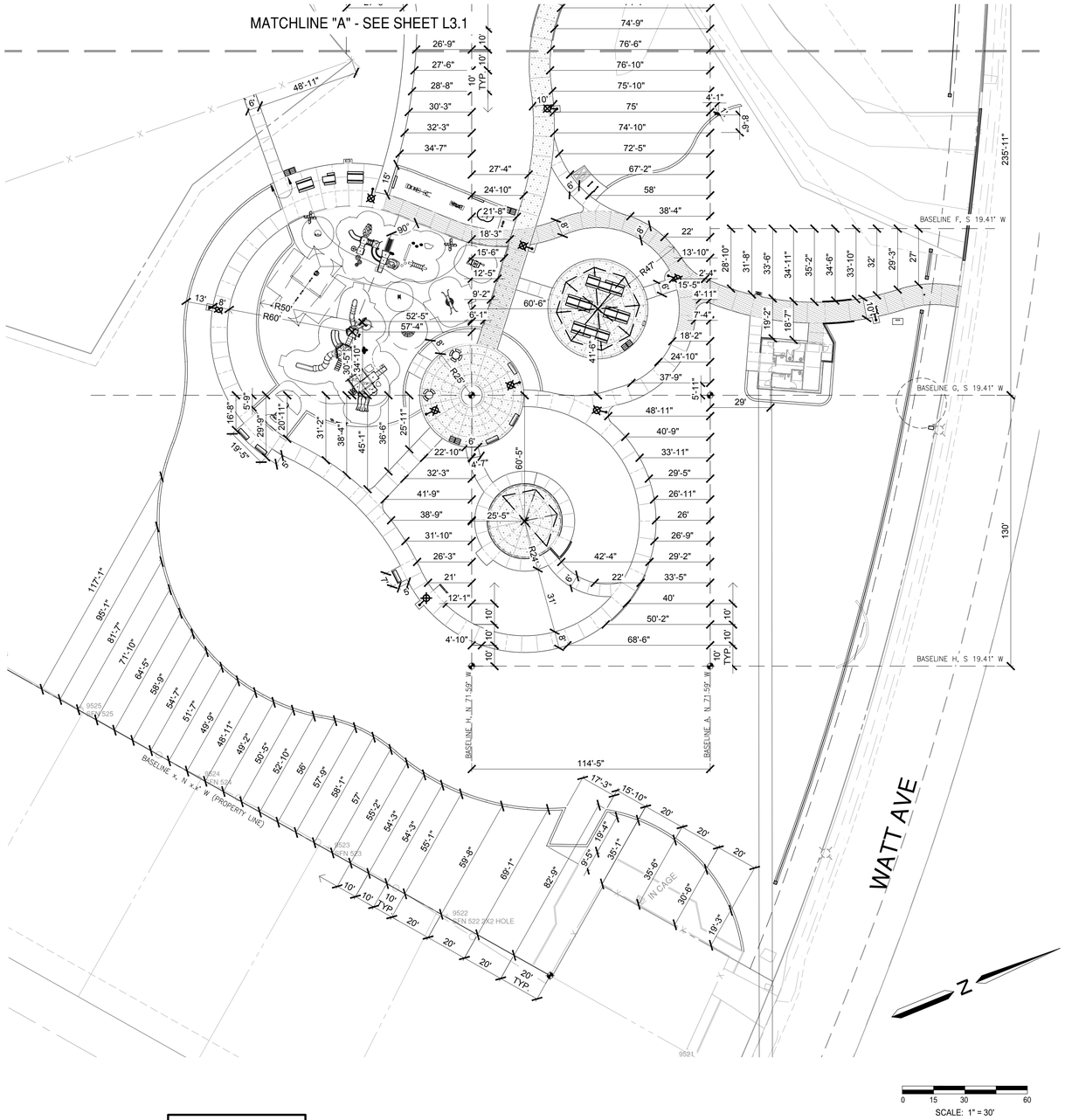

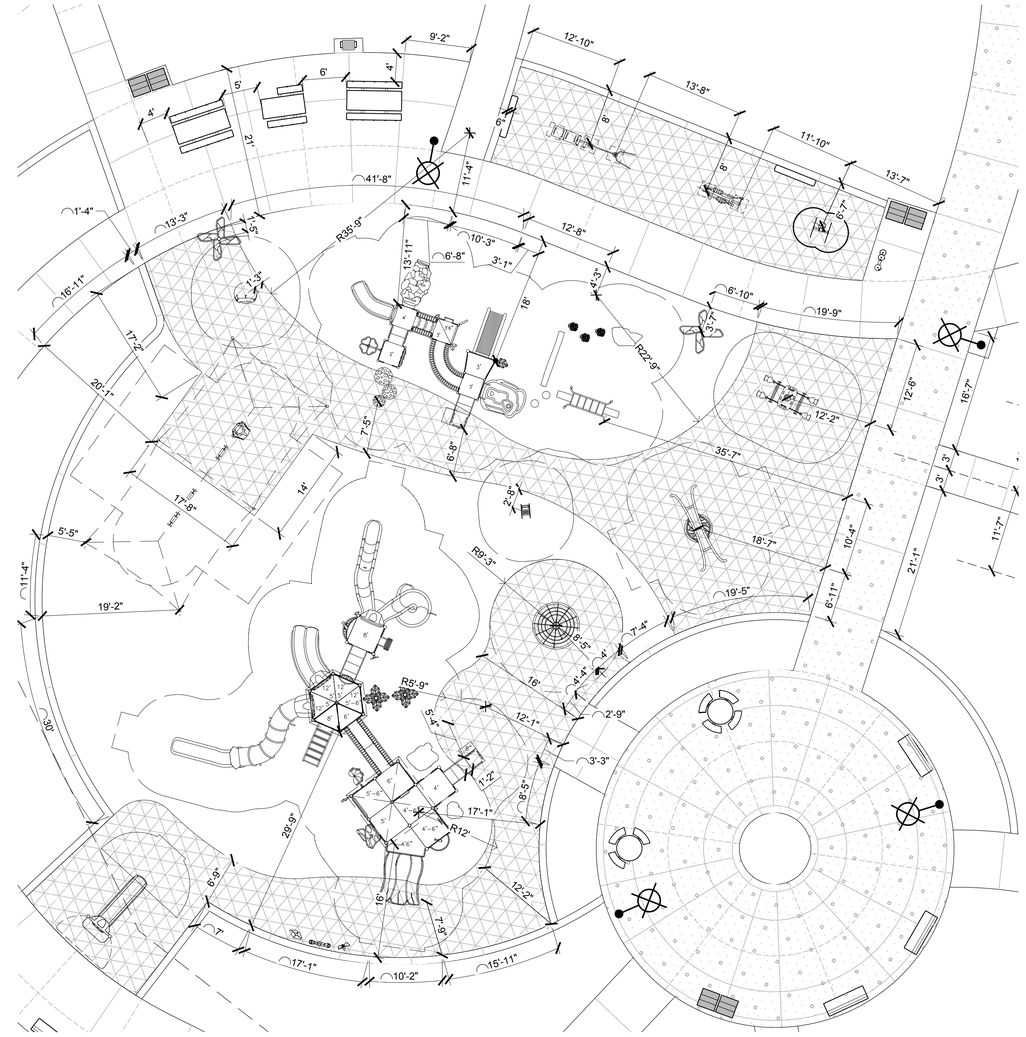

1 PLAYGROUND ENLARGEMENT + PLAZA

1"=10'-0"

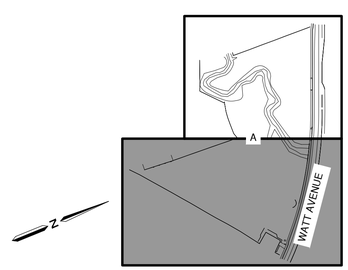

LOCATION MAP

1"=300'

GENERAL LAYOUT NOTES

1. FOR ADDITIONAL INFORMATION ON SITE FEATURES AND FINISHES SEE SHEET L1.0.
2. CONTRACTOR SHALL NOTIFY ALL PUBLIC OR PRIVATE UTILITY COMPANIES TWO (2) WORKING DAYS PRIOR TO COMMENCEMENT OF WORK ON THIS PROJECT TO VERIFY THE LOCATIONS OF EXISTING UTILITY LINES. CALL UNDERGROUND SERVICE ALERT (U.S.A.) TOLL FREE AT 1-800-227-2600 OR 811, 7:00 A.M. TO 5:00 P.M., MONDAY THROUGH FRIDAY.
3. ALL DIMENSIONS SHOW MEASUREMENTS IN A HORIZONTAL PLANE.
4. THE CONTRACTOR WILL PROVIDE THE CONSTRUCTION STAKES. THE NUMBER AND LOCATION OF STAKES REQUIRED SHALL BE DETERMINED BEFORE THE CONSTRUCTION BEGINS. ALL STAKING REQUESTS SHALL BE DIRECTED TO THE ENGINEER A MINIMUM OF 48 HOURS PRIOR TO ACTUAL NEED. ANY ADDITIONAL STAKING OR RESTAKING WILL ONLY BE DONE AS DIRECTED AND AUTHORIZED BY THE OWNER OR HIS AUTHORIZED AGENT. THE CITY ENGINEER HAS THE AUTHORITY TO REQUIRE THE OWNER OR HIS AUTHORIZED AGENT TO PLACE ADDITIONAL STAKES OR RESTAKES AS HE DEEMS NECESSARY FOR PROPER CONSTRUCTION OR TO AVOID CONFLICTS. ALL CONSTRUCTION STAKING SHALL BE DONE BY A REGISTERED CIVIL ENGINEER OR LICENSED LAND SURVEYOR. CONTRACTOR SHALL SCHEDULE HIS EFFORTS TO ALLOW TIME AFTER THE FIELD CREW ARRIVES AT THE SITE FOR THE STAKING NEEDS TO BE ADEQUATELY FULFILLED PRIOR TO THE START OF CONSTRUCTION.
5. WRITTEN DIMENSIONS SHALL ALWAYS TAKE PRECEDENCE OVER SCALED DIMENSIONS. IF THERE IS A CONFLICT, NOTIFY THE LANDSCAPE ARCHITECT AND OBTAIN A CLARIFICATION. NO DEVIATION OR SUBSTITUTION SHALL BE ALLOWED WITHOUT OBTAINING WRITTEN APPROVAL FROM THE DISTRICT.
6. ALL MATERIALS SHALL BE FURNISHED AND INSTALLED BY THE CONTRACTOR PER MANUFACTURER'S SPECIFICATIONS, UNLESS OTHERWISE NOTED IN THESE DRAWINGS.

ABBREVIATIONS

A	ASPHALT
BC	BUILDING CORNER
BR	BOTTOM OF RAMP
C	CONCRETE
CFL	CENTER OF FENCE LINE
CFP	CENTER OF FENCE POST
CNPT	CONTROL POINT
CP	CENTER OF PLANTER
EA	END OF ARC
EQ	EQUAL
FW	FACE OF WALL
MA	MIDPOINT OF ARC
MSP	MUSICAL STRUCTURE POST
PMC	PLAY SURFACING MOUND (CENTER)
PS	PLAY SURFACING (SYNTHETIC TURF, RUBBER OR ENGINEERED WOOD FIBAR)
PSP	PLAY STRUCTURE POST
R	RADIUS (CENTER)
SSP	SHADE STRUCTURE POST
TR	TOP OF RAMP

LAYOUT LEGEND

	POINT OF ORIGIN
EQ	EQUAL
RADIUS	ARC RADIUS, TYP.
LENGTH	DIMENSION, TYP.
N 0.00 E 0.00 DESC	NORTHING EASTING DESCRIPTION
	ALIGN, TYP.
+	ORIGIN OF RADIUS

811 Know what's below. Call before you dig.

Westwood
Westwood Professional Services, Inc.
6200 STONERIDGE MALL ROAD, SUITE 330
PLEASANTON, CA 94588
T: 925.223.8340
westwoodps.com

NO.	DESCRIPTION	DATE	BY	APP. DATE	APP.

ANTELOPE, CALIFORNIA

NHRPD SIERRA CREEK PARK

7781 WATT AVE
HORIZONTAL CONTROL PLAN

DATE: 08/31/26
DRAFTER: TH, AL, CY
DESIGNER: KF, TH
CHECKED: KF, JG
PROJECT NO. 41541

LICENSED LANDSCAPE ARCHITECT
KAREN N. FOLSOM
FOL SCAPE ARCHITECT
Signature
03/31/27
Renewal Date
08/31/26
Date
STATE OF CALIFORNIA

L3.0

Last Saved by: MALcuenco
Plot Date/Time: 8/31/2026 7:06 AM
Drawing: N:_ODE\Pleasanton\41541 NRHPD Sierra Creek Park\Landscape\ConstPlans\41541-HC

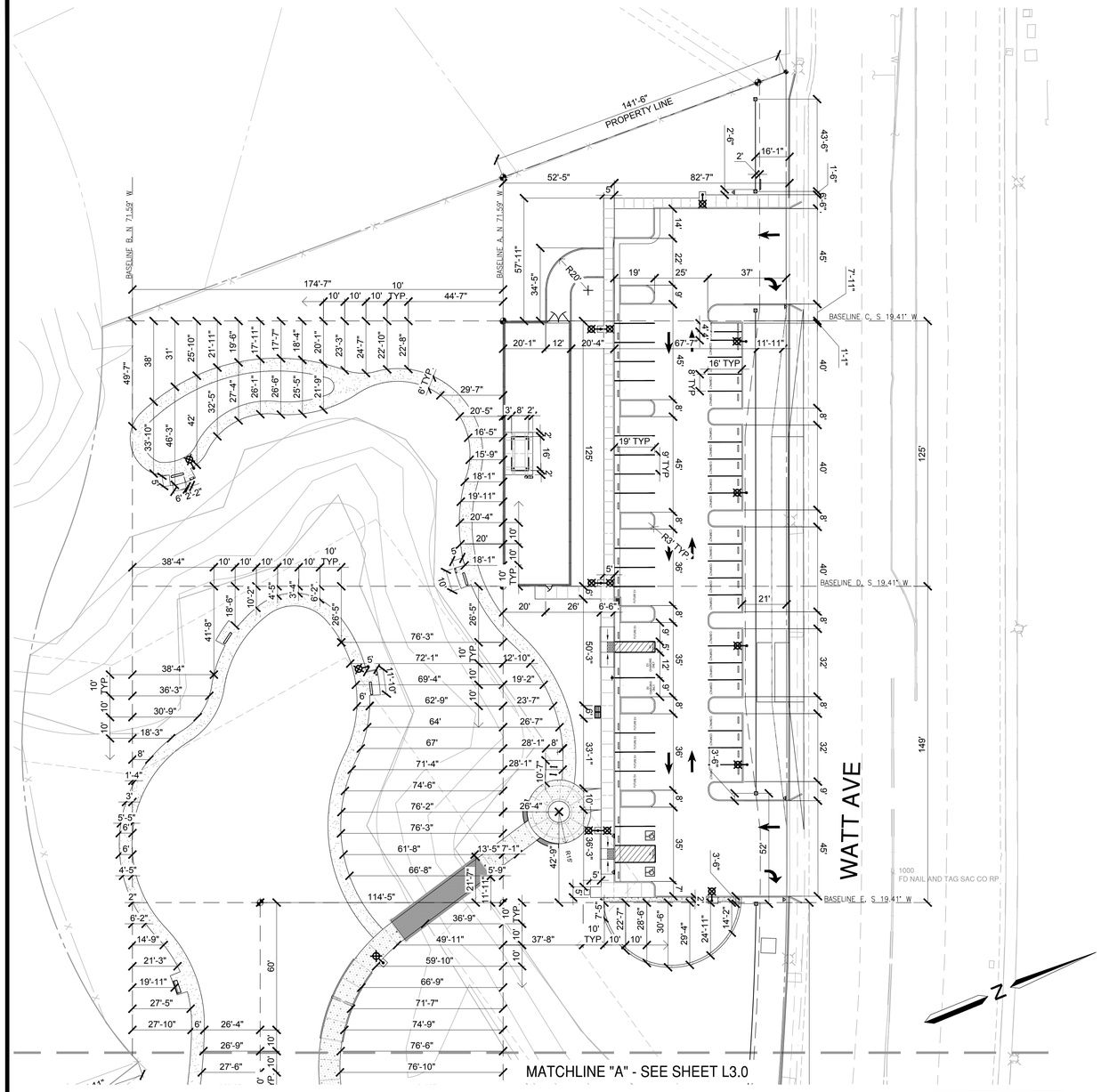

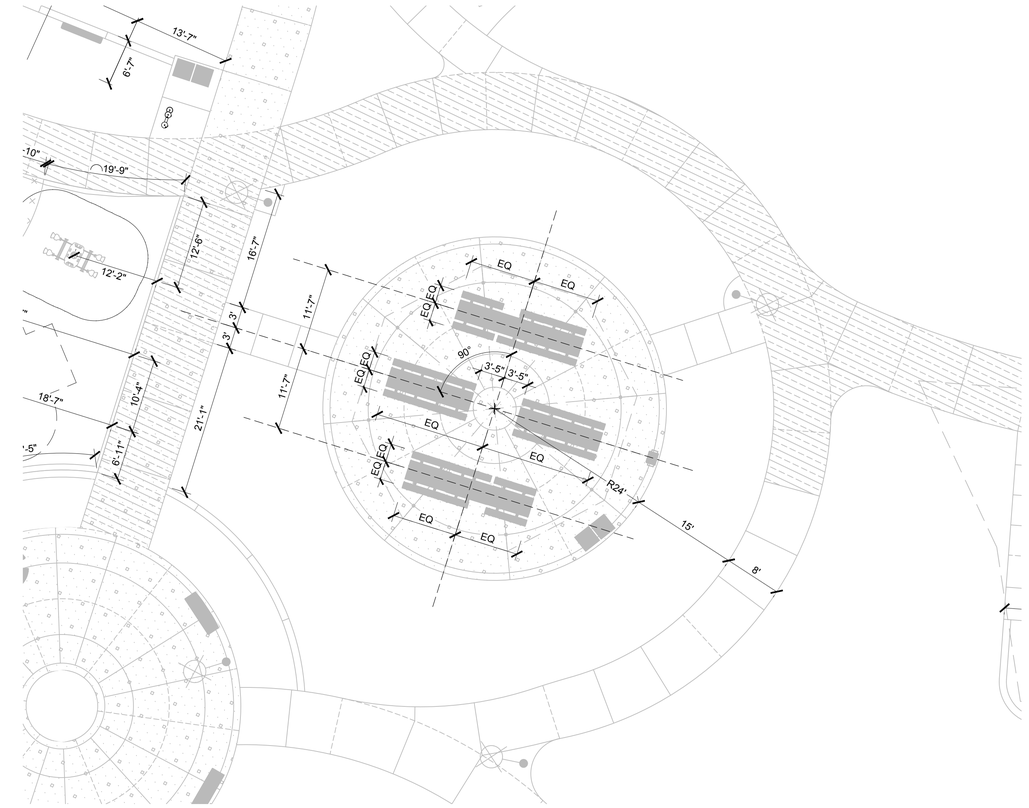

2 GROUP PICNIC AREA

1"=10'-0"

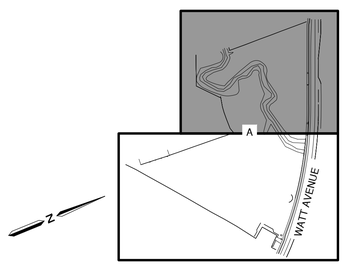

LOCATION MAP

1"=300'

GENERAL LAYOUT NOTES

1. FOR ADDITIONAL INFORMATION ON SITE FEATURES AND FINISHES SEE SHEET L2.0.
2. CONTRACTOR SHALL NOTIFY ALL PUBLIC OR PRIVATE UTILITY COMPANIES TWO (2) WORKING DAYS PRIOR TO COMMENCEMENT OF WORK ON THIS PROJECT TO VERIFY THE LOCATIONS OF EXISTING UTILITY LINES. CALL UNDERGROUND SERVICE ALERT (U.S.A.) TOLL FREE AT 1-800-227-2600 OR 811, 7:00 A.M. TO 5:00 P.M., MONDAY THROUGH FRIDAY.
3. ALL DIMENSIONS SHOW MEASUREMENTS IN A HORIZONTAL PLANE.
4. THE DISTRICT'S ENGINEER WILL PROVIDE THE CONSTRUCTION STAKES. THE NUMBER AND LOCATION OF STAKES REQUIRED SHALL BE DETERMINED BEFORE THE CONSTRUCTION BEGINS. ALL STAKING REQUESTS SHALL BE DIRECTED TO THE ENGINEER A MINIMUM OF 48 HOURS PRIOR TO ACTUAL NEED. ANY ADDITIONAL STAKING OR RESTAKING WILL ONLY BE DONE AS DIRECTED AND AUTHORIZED BY THE OWNER OR HIS AUTHORIZED AGENT. THE CITY ENGINEER HAS THE AUTHORITY TO REQUIRE THE OWNER OR HIS AUTHORIZED AGENT TO PLACE ADDITIONAL STAKES OR RESTAKES AS HE DEEMS NECESSARY FOR PROPER CONSTRUCTION OR TO AVOID CONFLICTS. ALL CONSTRUCTION STAKING SHALL BE DONE BY A REGISTERED CIVIL ENGINEER OR LICENSED LAND SURVEYOR. CONTRACTER SHALL SCHEDULE HIS EFFORTS TO ALLOW TIME AFTER THE FIELD CREW ARRIVES AT THE SITE FOR THE STAKING NEEDS TO BE ADEQUATELY FULFILLED PRIOR TO THE START OF CONSTRUCTION.
5. WRITTEN DIMENSIONS SHALL ALWAYS TAKE PRECEDENCE OVER SCALED DIMENSIONS. IF THERE IS A CONFLICT, NOTIFY THE LANDSCAPE ARCHITECT AND OBTAIN A CLARIFICATION. NO DEVIATION OR SUBSTITUTION SHALL BE ALLOWED WITHOUT OBTAINING WRITTEN APPROVAL FROM THE DISTRICT.
6. ALL MATERIALS SHALL BE FURNISHED AND INSTALLED BY THE CONTRACTOR PER MANUFACTURER'S SPECIFICATIONS, UNLESS OTHERWISE NOTED IN THESE DRAWINGS.

ABBREVIATIONS

A	ASPHALT
BC	BUILDING CORNER
BR	BOTTOM OF RAMP
C	CONCRETE
CFL	CENTER OF FENCE LINE
CFP	CENTER OF FENCE POST
CNPT	CONTROL POINT
CP	CENTER OF PLANTER
EA	END OF ARC
EQ	EQUAL
FW	FACE OF WALL
MA	MIDPOINT OF ARC
MSP	MUSICAL STRUCTURE POST
PMC	PLAY SURFACING MOUND (CENTER)
PS	PLAY SURFACING (SYNTHETIC TURF, RUBBER OR ENGINEERED WOOD FIBAR)
PSP	PLAY STRUCTURE POST
R	RADIUS (CENTER)
SSP	SHADE STRUCTURE POST
TR	TOP OF RAMP

LAYOUT LEGEND

	POINT OF ORIGIN
EQ	EQUAL
RADIUS	ARC RADIUS, TYP.
LENGTH	DIMENSION, TYP.
N 0.00 E 0.00 DESC	NORTHING EASTING DESCRIPTION
	ALIGN, TYP.
+	ORIGIN OF RADIUS

811 Know what's below. Call before you dig.

Westwood
Westwood Professional Services, Inc.
6200 STONERIDGE MALL ROAD, SUITE 330
PLEASANTON, CA 94588
T: 925.223.8340
www.westwoodps.com

NO.	DESCRIPTION	DATE	BY	APP. DATE	APP.

ANTELOPE, CALIFORNIA

NHRPD SIERRA CREEK PARK

7781 WATT AVE
HORIZONTAL CONTROL PLAN

DATE: 08/31/26
DRAFTER: TH, AL, CY
DESIGNER: KF, TH
CHECKED: KF, JG

PROJECT NO.
41541

LICENSED LANDSCAPE ARCHITECT
KAREN N. FOLSOM
Signature
03/31/27
Renewal Date
08/31/26
Date
STATE OF CALIFORNIA

L3.1

Last Saved by: MALoumno
Plot Date: Wed, 03/26/26 - 08:46 AM
Drawing: N:_ODE\Pleasanton\41541 NHRPD Sierra Creek Park\Landscape\Const\Plans\41541-HC

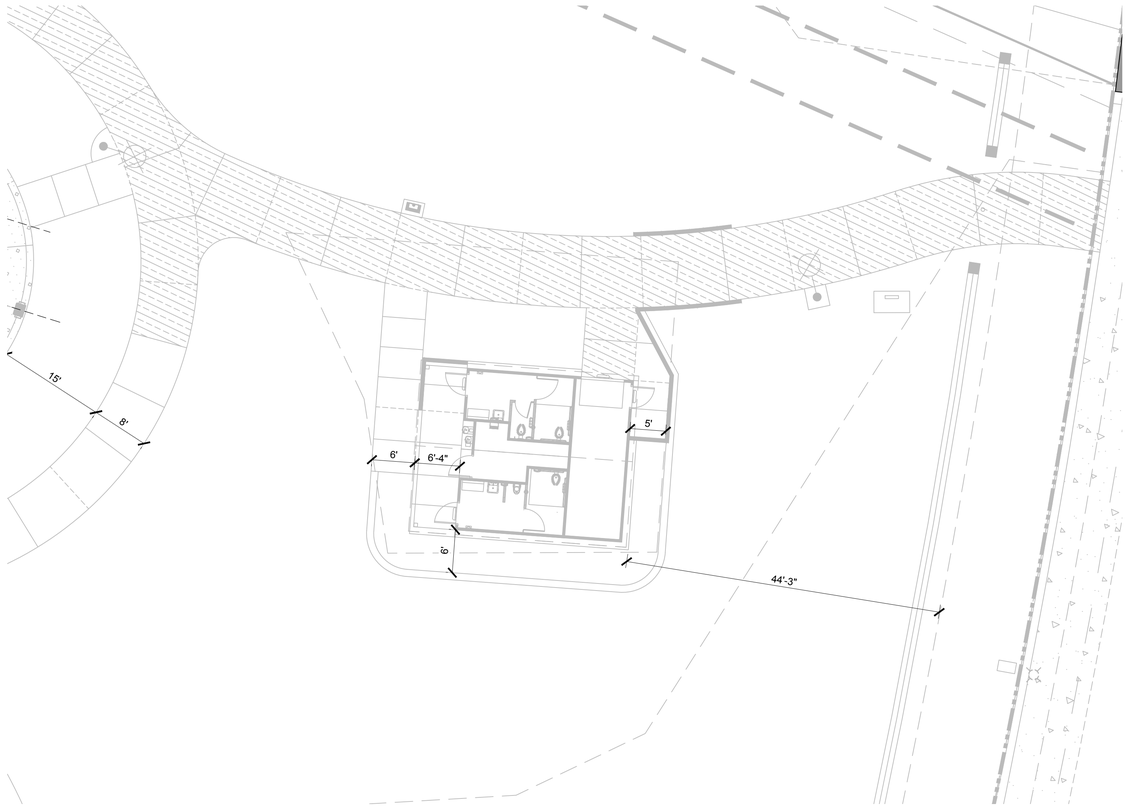

2 RESTROOM ENLARGEMENT

1"=10'-0"

ABBREVIATIONS

A	ASPHALT
BC	BUILDING CORNER
BR	BOTTOM OF RAMP
C	CONCRETE
CFL	CENTER OF FENCE LINE
CFP	CENTER OF FENCE POST
CNPT	CONTROL POINT
CP	CENTER OF PLANTER
EA	END OF ARC
EQ	EQUAL
FW	FACE OF WALL
MA	MIDPOINT OF ARC
MSP	MUSICAL STRUCTURE POST
PMC	PLAY SURFACING MOUND (CENTER)
PS	PLAY SURFACING (SYNTHETIC TURF, RUBBER OR ENGINEERED WOOD FIBAR)
PSP	PLAY STRUCTURE POST
R	RADIUS (CENTER)
SSP	SHADE STRUCTURE POST
TR	TOP OF RAMP

LAYOUT LEGEND

	POINT OF ORIGIN
EQ	EQUAL
RADIUS	ARC RADIUS, TYP.
LENGTH	DIMENSION, TYP.
N 0.00 E 0.00 DESC	NORTHING EASTING DESCRIPTION
	ALIGN, TYP.
	ORIGIN OF RADIUS

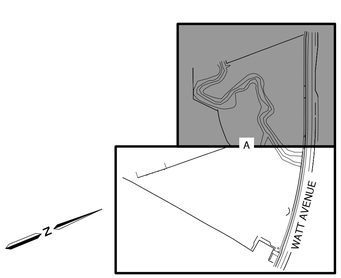

LOCATION MAP

1"=300'

GENERAL LAYOUT NOTES

1. FOR ADDITIONAL INFORMATION ON SITE FEATURES AND FINISHES SEE SHEET ####.
2. CONTRACTOR SHALL NOTIFY ALL PUBLIC OR PRIVATE UTILITY COMPANIES TWO (2) WORKING DAYS PRIOR TO COMMENCEMENT OF WORK ON THIS PROJECT TO VERIFY THE LOCATIONS OF EXISTING UTILITY LINES. CALL UNDERGROUND SERVICE ALERT (U.S.A.) TOLL FREE AT 1-800-227-2600 OR 811, 7:00 A.M. TO 5:00 P.M., MONDAY THROUGH FRIDAY.
3. ALL DIMENSIONS SHOW MEASUREMENTS IN A HORIZONTAL PLANE.
4. THE DISTRICT'S ENGINEER WILL PROVIDE THE CONSTRUCTION STAKES. THE NUMBER AND LOCATION OF STAKES REQUIRED SHALL BE DETERMINED BEFORE THE CONSTRUCTION BEGINS. ALL STAKING REQUESTS SHALL BE DIRECTED TO THE ENGINEER A MINIMUM OF 48 HOURS PRIOR TO ACTUAL NEED. ANY ADDITIONAL STAKING OR RESTAKING WILL ONLY BE DONE AS DIRECTED AND AUTHORIZED BY THE OWNER OR HIS AUTHORIZED AGENT. THE CITY ENGINEER HAS THE AUTHORITY TO REQUIRE THE OWNER OR HIS AUTHORIZED AGENT TO PLACE ADDITIONAL STAKES OR RESTAKES AS HE DEEMS NECESSARY FOR PROPER CONSTRUCTION OR TO AVOID CONFLICTS. ALL CONSTRUCTION STAKING SHALL BE DONE BY A REGISTERED CIVIL ENGINEER OR LICENSED LAND SURVEYOR. CONTRACTER SHALL SCHEDULE HIS EFFORTS TO ALLOW TIME AFTER THE FIELD CREW ARRIVES AT THE SITE FOR THE STAKING NEEDS TO BE ADEQUATELY FULFILLED PRIOR TO THE START OF CONSTRUCTION.
5. WRITTEN DIMENSIONS SHALL ALWAYS TAKE PRECEDENCE OVER SCALED DIMENSIONS. IF THERE IS A CONFLICT, NOTIFY THE LANDSCAPE ARCHITECT AND OBTAIN A CLARIFICATION. NO DEVIATION OR SUBSTITUTION SHALL BE ALLOWED WITHOUT OBTAINING WRITTEN APPROVAL FROM THE CITY.
6. ALL MATERIALS SHALL BE FURNISHED AND INSTALLED BY THE CONTRACTOR PER MANUFACTURER'S SPECIFICATIONS, UNLESS OTHERWISE NOTED IN THESE DRAWINGS.

811 Know what's below. Call before you dig.

Westwood
Westwood Professional Services, Inc.
6200 STONERIDGE MALL ROAD, SUITE 330
PLEASANTON, CA 94588
T: 925.223.8340
westwoodps.com

NO.	DESCRIPTION	DATE	BY	APP. DATE	APP.

ANTELOPE, CALIFORNIA

NHRPD SIERRA CREEK PARK

7781 WATT AVE
HORIZONTAL CONTROL PLAN

DATE: 08/31/26
DRAFTER: TH, AL, CY
DESIGNER: KF, TH
CHECKED: KF, JG
PROJECT NO. 41541

LICENSED LANDSCAPE ARCHITECT
KIRSTEN N. FOLSOM
Signature
03/31/27
Renewal Date
08/31/26
Date
STATE OF CALIFORNIA

L3.2

Last Saved by: MALocsmcs
Plot Scale: 1:1 Plot Time: 8/31/2026 9:06 AM
Drawing: N:_FOE\Pleasanton\41541 NRHPD Sierra Creek Park\Landscape\ConstPlans\41541-HC

GENERAL IRRIGATION NOTES

GENERAL IRRIGATION NOTES

1. ANY AND ALL PORTIONS OF THIS WORK SHALL BE CONSTRUCTED IN COMPLIANCE WITH ALL APPLICABLE RULES AND REGULATIONS AS SET FORTH BY LOCAL MUNICIPALITIES, STATE AND NATIONAL AGENCIES. IN THE EVENT THERE IS A CONFLICT WITH THESE PLANS AND THE AGENCIES STATED ABOVE, THE GOVERNING BODY'S REGULATIONS SHALL PREVAIL.
2. IRRIGATION SHALL BE CONSISTENT WITH THE COUNTY WATER CONSERVATION REQUIREMENTS (15.92.010) AND THE STATE WATER EFFICIENT LANDSCAPE ORDINANCE (AB 1881).
3. PRIOR TO BIDDING AND COMMENCEMENT OF SITE WORK, THE CONTRACTOR SHALL BECOME FAMILIAR WITH/AND EXAMINE CONDITIONS OF THE PROJECT SITE, VERIFYING LOCATIONS OF ALL EXISTING UTILITIES, STRUCTURES AND SERVICES. LOCATIONS OF ITEMS SHOWN ON THESE PLANS ARE ONLY APPROXIMATIONS. ANY DISCREPANCIES DISCOVERED SHALL BE REPORTED TO THE DISTRICT. FAILURE TO REPORT DISCREPANCIES TO THE DISTRICT BEFORE COMMENCEMENT OF SITE WORK IMPLIES ACCEPTANCE OF SITE CONDITIONS AND COSTS ASSOCIATED WITH CORRECTING IRRIGATION LAYOUTS.
4. ANY EXISTING SITE FEATURES, GRADE CHANGES, OR SITE PLAN DESIGN CHANGES NOT SPECIFICALLY ADDRESSED ON THESE PLANS, (OR UNKNOWN CONDITIONS THAT WERE NOT APPARENT DURING THE DESIGN PROCESS) THAT WILL IMPACT INSTALLATION OR OPERATING OF IRRIGATION SYSTEMS IN ANY WAY, SHALL BE REPORTED TO THE LANDSCAPE ARCHITECT/DISTRICT PRIOR TO COMMENCEMENT OF SITE WORK.
5. CONTRACTOR SHALL INSTALL IRRIGATION EQUIPMENT PER DETAILS AND SPECIFICATIONS. ALL IRRIGATION EQUIPMENT REQUIRED FOR PROJECT COMPLETION BUT NOT DETAILED ON THESE PLANS SHALL BE INSTALLED PER LOCAL AND STATE CODES AND MANUFACTURER'S WRITTEN INSTALLATION RECOMMENDATIONS.
6. CONTRACTOR SHALL OBTAIN ALL REQUIRED PERMITS FOR SUCCESSFUL COMPLETION OF PROJECT PRIOR TO COMMENCEMENT OF WORK.
7. CONTRACTOR SHALL BE RESPONSIBLE FOR OBTAINING ANY AND ALL PROJECT RELATED ARCHITECTURAL OR ENGINEERING DRAWINGS PRIOR TO COMMENCEMENT OF WORK.
8. THE CONTRACTOR SHALL REPAIR, REPLACE, OR COMPENSATE DISTRICT FOR ALL ITEMS DAMAGED BY THEIR WORK.
9. THE CONTRACTOR SHALL COORDINATE AND SCHEDULE INSTALLATION EFFORTS WITH THOSE OF OTHER TRADES TO AVOID COSTLY DELAYS AND ERRORS.

INSPECTIONS

1. CONTACT COUNTY OF SACRAMENTO, 48HRS PRIOR TO TEST TO SCHEDULE ALL IRRIGATION INSPECTIONS. REQUIRED TESTING:
   A. PRESSURE TEST: MAINLINE SHALL HOLD 120 PSI MIN. FOR 8 HOURS. IF LEAKS OCCUR, REPLACE FAULTY COMPONENTS AND RE-TEST. CONTRACTOR SHALL PROVIDE MAINLINE & WIRE AS-BUILT'S TO LANDSCAPE ARCHITECT/DISTRICT PRIOR TO BACKFILLING TRENCH AFTER PRESSURE TEST IS COMPLETE.
   B. COVERAGE TEST: COVERAGE TEST SHALL BE PERFORMED PRIOR TO INSTALLATION OF ANY PLANT MATERIAL. IRRIGATION AUDIT SHALL BE PERFORMED AT THIS POINT, BY CERTIFIED IRRIGATION AUDITOR. CONTRACTOR SHALL PROVIDE RESULTS TO LANDSCAPE ARCHITECT/DISTRICT AND MAKE ALL NECESSARY CORRECTIONS PRIOR TO PLANTING. FAILURE TO DO SO SHALL MAKE ALL REQUIRED COSTS ASSOCIATED WITH ADJUSTING IRRIGATION THE CONTRACTOR'S RESPONSIBILITY.

POINT OF CONNECTION NOTES

1. CONTRACTOR SHALL INVESTIGATE AND DETERMINE THE POINT OF CONNECTION LOCATION. IF DIFFERENT THAN SHOWN ON THESE PLANS THIS SHALL BE REPORTED TO THE LANDSCAPE ARCHITECT
2. THE IRRIGATION SYSTEM AS SHOWN WITHIN THESE PLANS HAS BEEN DESIGNED BASED ON OPERATING PRESSURES OF 40 PSI AND MAXIMUM FLOW DEMANDS OF 47 GPM. THE COUNTY OF SACRAMENTO REPORTS THAT STATIC WATER PRESSURES AT THE SITE WILL BE APPROXIMATELY 70 PSI.
3. THE CONTRACTOR SHALL PERFORM PRESSURE TESTS AT THE POINT OF CONNECTION TO CONFIRM ACTUAL SITE PRESSURE LEVELS. ANY DISCREPANCIES BETWEEN INFORMATION ON THESE PLANS AND THAT OF EXISTING SITE CONDITIONS OR MANUFACTURER DATA SHALL BE REPORTED TO THE LANDSCAPE ARCHITECT. FAILURE TO CONFIRM POC INFORMATION RESULTING IN REQUIRED CHANGES, DUE TO LOW PRESSURE OR VOLUME, WILL RESULT IN DISTRICT DIRECTED REVISIONS AT NO ADDITIONAL COST TO THE DISTRICT.

CONTROLLER ASSEMBLY NOTES

1. EXISTING CONTROLLER LOCATION SHOWN ON DRAWINGS IS AN APPROXIMATE LOCATION. CONTRACTOR SHALL CONFIRM LOCATION OF CONTROLLER WITH DISTRICT PRIOR TO CONTROLLER INSTALLATION. THE CONTRACTOR SHALL BE RESPONSIBLE FOR ELECTRICAL CONNECTIONS BETWEEN THE 120 VOLT POWER SOURCE FROM THE EXISTING CONTROLLER TO THE VALVES, AND ADDITIONAL IRRIGATION EQUIPMENT. SEE ELECTRICAL ENGINEERING DRAWINGS FOR ELECTRICAL CONNECTION REQUIREMENTS AND LOCATION.
2. A LAMINATED, WATERPROOF, LEGIBLE, CHART OF THE IRRIGATION SYSTEM NOT EXCEEDING 11"X17" SHALL BE ADHERED TO THE INSIDE COVER OF THE CONTROLLER. ALL VALVES AND THEIR RESPECTIVE COVERAGE AREAS SHALL BE IDENTIFIED WITH SEPARATE AND DISTINCT COLORS.

IRRIGATION VALVE NOTES

1. VALVE AND QUICK COUPLER LOCATIONS SHOWN ON DRAWINGS ARE APPROXIMATE LOCATIONS. CONTRACTOR SHALL STAKE THE LOCATIONS OF VALVES AND QUICK COUPLERS FOR APPROVAL BY DISTRICT PRIOR TO INSTALLATION.
2. VALVES AND QUICK COUPLERS SHALL BE GROUPED TOGETHER AND INSTALLED IN SHRUB BEDS, UNLESS OTHERWISE INDICATED.
3. INSTALL ALL VALVES AND QUICK COUPLERS PER PLAN DETAILS AND MANUFACTURER'S WRITTEN RECOMMENDATIONS.

DRIP AND LOW FLOW EMITTER NOTES

1. INSTALL ALL DRIPLINE AND EMITTERS PER DETAILS AND PLANS. TUBING SHALL INSTALLED WITH GALVANIZED TIE-DOWN STAKES AT 24" INTERVALS.

OVERHEAD SPRAY AND ROTOR NOTES

1. ALL HEADS SHALL INCLUDE A FACTORY INSTALLED DRAIN CHECK VALVE TO PREVENT LOW HEAD DRAINAGE.
2. ALL HEADS SHALL INCLUDE A FACTORY INSTALLED PRESSURE REGULATOR. SEE LEGEND FOR SPECIFIED PRESSURE LEVELS OF INDIVIDUAL HEADS.
3. ALL HEADS AND NOZZLES SHALL BE INSTALLED PER PLANS. AFTER INSTALLATION, ADJUST ALL ARCS AND THROWS FOR EVEN COVERAGE AND TO PREVENT OVERSPRAY ONTO PAVEMENT, BUILDINGS, WALLS, OR EQUIPMENT. THIS INCLUDES BUT IS NOT LIMITED TO ADJUSTMENTS TO THE RADIUS REDUCTION SCREW, SCREEN REPLACEMENTS, AND APPROVED NOZZLE REPLACEMENTS. ANY VERTICAL OBSTRUCTIONS NOT NOTED ON THESE PLANS SHALL BE REPORTED TO THE LANDSCAPE ARCHITECT PRIOR TO COMMENCING WORK.
4. FLOOD TRENCHES TO COMPACT SOIL PRIOR TO LEVELING HEADS. ALL HEADS SHALL BE INSTALLED FLUSH AND PERPENDICULAR TO FINISH GRADE UNLESS OTHERWISE NOTED OR DETAILED.

ELECTRICAL WIRING NOTES

1. WIRING SHALL BE INSTALLED IN SAME TRENCH AS MAINLINE WITH 18" OF COVER.
2. CONTRACTOR SHALL INSTALL A 1" SCH. 40 ELEC. CONDUIT ALONG THE ENTIRE RUN OF MAINLINE IN TO EACH VALVE BOX, SPLICE BOX OR STUB OUT LOCATION. INSTALL SWEEPS INTO EACH VALVE BOX.
3. CONTROL WIRE SHALL BE U.L. LISTED DIRECT BURIAL (PAIGE ELECTRIC TWISTED CONDUCTOR, JACKETD P7072D OR EQUAL) #14UF AWG MINIMUM. BUNDLE 6' OF CONTROL WIRE IN EACH VALVE BOX (DO NOT CUT OR SPLICE CONTINUOUS RUN UNLESS NECESSARY. ALL SPLICES SHALL USE DBY/R WIRE CONNECTORS). WIRING SHALL BE COLOR CODED WITH CORRESPONDING STATION NUMBER TAGS AT THE CONTROLLER AND VALVES.
4. CONTRACTOR SHALL INSTALL A 1" SCH. 40 ELEC. CONDUIT WITH PE89 COMMUNICATION CABLE FROM THE FLOW SENSOR TO THE CONTROLLER. WIRE RUNS SHALL BE CONTIGUOUS AND SHALL AVOID ANY SPLICING. CONTRACTOR MAY INSTALL UP TO (3) CABLES IN EACH CONDUIT.
5. WATERPROOF DBY/R WIRE CONNECTORS SHALL BE USED AT ALL WIRE CONNECTIONS.
6. DEC-5G-LINE SURGE PROTECTOR WITH 8' COPPERCLAD GROUNDING ROD. ACHIEVE 10 OHMS OR LESS. PLACE ONE GROUNDING ROD AT CONTROLLER AND 1 GROUNDING ROD EVERY 500' ALONG IRRIGATION SYSTEM MAINLINE.

PVC PIPING NOTES

1. PIPING AND EQUIPMENT LAYOUT IS SHOWN SCHEMATICALLY FOR VISUAL CLARITY. PIPING AND EQUIPMENT SHOWN WITHIN PAVED AREAS SHALL BE INSTALLED WITHIN AREAS DESIGNATED FOR LANDSCAPE. MAINLINES SHOULD BE LOCATED A MINIMUM OF 18" OFF ADJACENT PAVEMENT OR OTHER OBSTACLES.
2. NON-PRESSURIZED LINES SHALL BE BURIED WITH A MINIMUM OF 18" COVER. PRESSURIZED MAINLINES SHALL BE BURIED WITH A MINIMUM OF 24" COVER. UNDERGROUND WARNING TAPE READING "CAUTION, BURIED IRRIGATION LINE BELOW" SHALL BE INSTALLED 12" ABOVE PRESSURIZED LINES.
3. PIPE SIZES SHALL BE INSTALLED PER PLANS. SMALLER PIPE SIZE SUBSTITUTIONS ARE NOT ACCEPTABLE; LARGER PIPE SIZES MAY BE APPROVED.
4. SOLVENT WELD FITTINGS FOR MAINLINES 4" AND SMALLER SHALL BE SCHEDULE 80 PVC. ALL THREADED FITTINGS SHALL BE SCHEDULE 80 PVC. FOR MAINLINES 6" AND LARGER, USE LEEMCO STRAP FITTINGS WITH THRUST BLOCKS.

SLEEVING NOTES

1. SCHEDULE 40 PVC SLEEVES SHALL PROVIDED FOR ALL MAINLINE PIPING, LATERAL LINE PIPING AND WIRING UNDER PAVEMENT. LATERAL LINE SLEEVES NOT REQUIRED UNDER PAVEMENT SPANNING LESS THAN 6', ANY LATERAL LINES NOT REQUIRING A SLEEVE SHALL BE INSTALLED PRIOR TO PAVING AND SHALL BE SCHEDULE 40 PVC.
2. SLEEVES SHALL BE SIZED PER PLAN OR TWICE THE SIZE OF THE PIPE WHEN NOT SPECIFIED. ELECTRICAL WIRE SLEEVES SHALL BE OF SUFFICIENT SIZE FOR THE REQUIRED NUMBER OF WIRES. PIPING AND WIRING SHALL BE IN SEPARATE SLEEVES.
3. SLEEVES SHALL EXTEND A MINIMUM OF 12" BEYOND PAVED SURFACES.

WATER CONSERVATION STATEMENT

1. I HAVE COMPLIED WITH THE CRITERIA OF THE (CALIFORNIA/SACRAMENTO) ORDINANCE AND APPLIED THEM FOR THE EFFICIENT USE OF WATER IN THE IRRIGATION DESIGN PLAN.
2. CHANGES TO THE APPROVED PLANS OR FIELD SUBSTITUTIONS SHALL NOT BE PERMITTED WITHOUT PRIOR WRITTEN APPROVAL FROM THE LANDSCAPE ARCHITECT AND THE COUNTY OF SACRAMENTO. IF THE DISTRICT/CONTRACTOR DEVIATES FROM THE APPROVED PLAN WITHOUT PRIOR WRITTEN APPROVAL THEY WILL BE REQUIRED TO MAKE ANY CORRECTIONS, AT THEIR OWN EXPENSE, TO BRING THE LANDSCAPE AND IRRIGATION INTO COMPLIANCE WITH THE APPROVED PLANS AND THE STATE MODEL WATER EFFICIENT LANDSCAPE ORDINANCE.

CLOSE-OUT DOCUMENTS

1. AT THE COMPLETION OF THE PROJECT THE CONTRACTOR SHALL SUPPLY A "CERTIFICATE OF COMPLETION" DOCUMENT. THE DOCUMENT SHALL INCLUDE:
   A. PROJECT INFORMATION SHEET THAT CONTAINS:
      1. DATE
      2. PROJECT NAME
      3. PROJECT APPLICANT NAME, TELEPHONE NUMBER, AND MAILING ADDRESS.
      4. PROJECT ADDRESS
      5. PROPERTY DISTRICT NAME, TELEPHONE NUMBER AND MAILING ADDRESS.
   B. CERTIFICATION BY EITHER THE SIGNER OF THE LANDSCAPE DESIGN PLAN, THE DESIGNER OF THE IRRIGATION DESIGN PLAN OR THE LICENSED LANDSCAPE CONTRACTOR THAT THE LANDSCAPE PROJECT HAS BEEN INSTALLED PER THE APPROVED LANDSCAPE DOCUMENTATION PACKAGE.
      1. WHERE THERE HAVE BEEN SIGNIFICANT CHANGES MADE IN THE FIELD DURING CONSTRUCTION THESE "AS-BUILT" OR RECORD DRAWINGS SHALL BE INCLUDED WITH THE CERTIFICATION.
      2. A DIAGRAM OF THE IRRIGATION PLAN SHOWING HYDROZONES SHALL BE KEPT WITH THE IRRIGATION CONTROLLER FOR SUBSEQUENT MANAGEMENT PURPOSES.
   C. IRRIGATION SCHEDULING PARAMETERS USED TO SET THE CONTROLLER.
   D. LANDSCAPE AND IRRIGATION MAINTENANCE SCHEDULE
   E. IRRIGATION AUDIT REPORT.
   F. SOILS ANALYSIS REPORT IF NOT SUBMITTED WITH LANDSCAPE DOCUMENTATION PACKAGE AND DOCUMENTATION VERIFYING IMPLEMENTATION OF SOIL REPORT RECOMMENDATIONS.

IRRIGATION LEGEND

SYMBOL	MANUFACTURER/MODEL/DESCRIPTION	QTY	PSI	GPM	RADIUS	DETAIL
SPRAY						
	HUNTER MP1000 PROS-06-PRS40-CV TURF ROTARY, 6IN. POP-UP WITH CHECK VALVE, PRESSURE REGULATED TO 40 PSI, MP ROTATOR NOZZLE. M=MAROON ADJ ARC 90 TO 210, L=LIGHT BLUE 210 TO 270 ARC, O=OLIVE 360 ARC ON PRS40 BODY.	18	40	VARIES	8' TO 15'	
	HUNTER MP2000 PROS-06-PRS40-CV TURF ROTARY, 6IN. POP-UP WITH FACTORY INSTALLED CHECK VALVE, PRESSURE REGULATED TO 40 PSI, MP ROTATOR NOZZLE. K=BLACK ADJ ARC 90-210, G=GREEN ADJ ARC 210-270, R=RED 360 ARC ON PRS40 BODY.	54	40	VARIES	13' TO 21'	6&7/L7.0
	HUNTER MP3000 PROS-06-PRS40-CV TURF ROTARY, 6IN. POP-UP WITH FACTORY INSTALLED CHECK VALVE, PRESSURE REGULATED TO 40 PSI, MP ROTATOR NOZZLE. B=BLUE ADJ ARC 90-210, Y=YELLOW ADJ ARC 210-270, A=GRAY 360 ARC ON PRS40 BODY.	84	40	VARIES	22' TO 30'	
	EXISTING ROTOR TO BE REMOVED AND CAP PIPE. DELIVER TO DISTRICT REP.	22				–
	EXISTING ROTOR TO REMAIN, APPROXIMATE LOCATION SHOWN. PROTECT IN PLACE.	–	30			–
	EXISTING STRIP SPRAY TO BE REMOVED AND CAP PIPE. DELIVER TO DISTRICT REP.	1				–
	EXISTING STRIP SPRAY TO REMAIN, APPROXIMATE LOCATION SHOWN. PROTECT IN PLACE.	–	30			–
BUBBLER						
	HUNTER RZWS-18-50-CV SERIES (2 PER TREE) 18IN. LONG RZWS WITH INSTALLED .25 GPM OR .50 GPM BUBBLER OPTIONS, 1/2IN. SWING JOINT FOR CONNECTION TO 1/2IN. PIPE	294	20	.25/EA		11/L7.0
	EXISTING BUBBLER TO REMAIN, APPROXIMATE LOCATION SHOWN. PROTECT IN PLACE.	27	20			–
DRIP COMPONENTS						
	PIPE TRANSITION POINT PIPE TRANSITION POINT FROM PVC LATERAL TO QF HEADER	61				1&2/L7.1
	RAIN BIRD XFF-MA-050 W/ ½" SCH. 40 THREADED CAP FLUSH VALVE, PLUMBED TO FLUSH MANIFOLD AT LOW POINT.	103				4/L7.1
	RAIN BIRD OPERIND POP-UP OPERATION INDICATOR	103				5/L7.1
	RAIN BIRD XFS-CV-06-18 (18" LINE SPACING) SHRUB AREAS	38,805 L.F.		0.6 GPH		1&2/L7.1
IRRIGATION EQUIPMENT						
	HUNTER ICZ-101-40 1IN., ICZ DRIP ZONE KIT. PLASTIC ELECTRIC REMOTE CONTROL VALVES, 40 PSI PRESSURE REGULATION. 150 MESH STAINLESS STEEL SCREEN. FOR COMMERCIAL/MUNICIPAL USE.	24				3/L7.1
	HUNTER ICV-A 2IN. PLASTIC ELECTRIC REMOTE CONTROL VALVES, ANGLE CONFIGURATION, WITH NPT THREADED INLET/OUTLET, FOR COMMERCIAL/MUNICIPAL USE. INSTALL IN RECTANGULAR IN RESTROOM VALVE BOX W/LOCKING LED.	13				5/L7.0
	EXISTING VALVE TO BE ADJUSTED 25 FEET ALONG WITH EXISTING MAINLINE.	1				–
	EXISTING VALVE TO REMAIN. PROTECT IN PLACE.	8				–
	RAIN BIRD 33-DLRC QUICK COUPLER VALVE, PLACE INSTALL IN ROUND VALVE BOX W/ LOCKING LID. INSTALL EVERY 100.'	11				4/L7.0
	NIBCO T-113 K CLASS 125 BRONZE GATE SHUT OFF VALVE WITH CROSS HANDLE, SAME SIZE AS MINALINE PIPE DIAMETER. INSTALL IN ROUND VALVE BOX W/ LOCKABLE LID.	6				3/L7.0
MV	BUCKNER/SUPERIOR 3200 2" 2" NORMALLY CLOSED MASTER VALVE. INSTALL IN RECTANGULAR IN RESTROOM VALVE BOX W/LOCKING LID.	1				2/L7.0
FS	CREATIVE SENSOR TECHNOLOGY FSI-B15-001 1-1/2" BRASS FLOW SENSOR. INSTALL RAINBIRD VBSTDB OR VBSTDB VALVE BOX OR EQUAL.	1				
C	EXISTING IRRITROL MC-24 PLUS B 24-STATION CONTROLLER TO BE REPLACED WITH HUNTER ACC2 CENTRALUS CLOUD-BASED 54 STATION WALL MOUNT CONTROLLER WITH SOLAR SYNC SENSOR. INSTALL CONTROLLER INSIDE UTILITY STORAGE. ROOF MOUNT SOLAR SYNC SENSOR ON RESTROOM BUILDING.	1				1/L7.0
	EXISTING GATE SHUT OFF VALVE, APPROXIMATE LOCATION SHOWN. PROTECT IN PLACE.	–				–
EM	EXISTING 2" WATER METER, APPROXIMATE LOCATION SHOWN. PROTECT IN PLACE.	2				–
EB	EXISTING 3" FEBCO 825-Y REDUCED PRESSURE BACKFLOW DEVICE, APPROXIMATE LOCATION SHOWN.	1				–
PIPING						
	IRRIGATION LATERAL LINE: SCHEDULE 40 PVC SCHEDULE 40 PVC IRRIGATION PIPE. ONLY LATERAL TRANSITION PIPE SIZES 1" AND ABOVE ARE INDICATED ON THE PLAN, WITH ALL OTHERS BEING 3/4" IN SIZE.	11.009 L.F.				8/L7.0
	RAIN BIRD QF-HEADER (MODEL #QF-1012, QF-1018) 1" DISTRIBUTION TUBE W/ BARBS PRE-INSTALLED @ 12" OR 18" O.C. (SIZE AS NEEDED).	1.023 L.F.				1&2/L7.1
	IRRIGATION MAINLINE: 2" SCHEDULE PVC PVC SCHEDULE 40 IRRIGATION PIPE. ALL MAINLINE FITTINGS SHALL BE SCH 80 PVC.	1.738 L.F.				8/L7.0 6/L7.1
	EXISTING MAINLINE	–				–
	PIPE SLEEVE: PVC SCHEDULE 40	VARIES				9/L7.0

IRRIGATED LANDSCAPE WATER EFFICIENCY TABLE

WATER BUDGET CALCULATIONS

MAXIMUM APPLIED WATER ALLOWANCE

MAWA=(ETo)(0.62)((0.45xLA)+((1.0-0.45)xSLA))	LOCAL ETo=	LA =	SLA =		MAWA TOTAL=
	55.2	85,080	33,984		1,949,988 GAL.

ESTIMATED TOTAL WATER USE

ETWU=(ETo)(0.62)(((PFxHA)/IE)+SLA)	LOCAL ETo=	PF =	LA =	SLA =		ETWU TOTAL=
	55.2	SEE BELOW	85,080	33,984		1,803,348 GAL.

HYDROZONE INFORMATION TABLE

HYDROZONE TAG	PLANT FACTOR (PF)	IRRIGATION METHOD	IRRIGATION EFFICIENCY (IE)	ETAF (PF/IE)	LANDSCAPE AREA (SF)	ETAF X AREA	ESTIMATED TOTAL WATER USE (ETWU)
LANDSCAPE AREAS							
12, 13, 22, 30 (TREE/RWS/MODERATE)	0.50	RWS	0.81	0.62	2,516 SF	1,553	53,153 GAL
27, 28 (TREE/RWS/LOW)	0.24	RWS	0.81	0.30	1,640 SF	492	16,838 GAL
6, 14, 32, 37 (SHRUB/DRIP/MODERATE)	0.50	DRIP	0.81	0.62	8,136 SF	5,022	171,881 GAL
3, 5, 7, 10, 11 15-20, 23, 24, 25, 29, 31, 33-36 (SHRUB/DRIP/LOW)	0.24	DRIP	0.81	0.30	38,804 SF	11,641	398,408 GAL
					TOTAL AREA= 51,096 SF	TOTAL= 18,709	TOTAL = 640,280 GAL.
SPECIAL LANDSCAPE AREAS							
1, 2, 4, 8, 9, 21, 26 (TURF/ROTARY/HIGH)				1	33,984 SF	33,984	1,163,068 GAL
					TOTAL AREA= 33,984 SF	TOTAL= 33,984	TOTAL = 1,163,068 GAL.

* THIS INFORMATION DERIVED FROM PLANT FACTOR DESIGNATIONS IN THE WUCOLS IV DOCUMENT.

IRRIGATION SCHEDULE

SCHEDULING NOTES & RUN TIMES

WATERING CYCLES AND DURATION DURING PRE-ESTABLISHMENT PERIODS SHOULD BE ADJUSTED PER PLANT PROVIDER'S RECOMMENDATIONS AND CURRENT WEATHER CONDITIONS.

POST ESTABLISHMENT IRRIGATION SCHEDULE CALCULATED USING AVERAGE CLIMATE CONDITIONS AND AVERAGE PLANT REQUIREMENTS. THIS SCHEDULE SERVES AS A BASE FOR CONTROLLER PROGRAMMING. EXTREME AND SITE SPECIFIC CONDITIONS WILL RESULT IN ETo ADJUSTMENTS AND MAY REQUIRE ADJUSTMENTS TO SCHEDULE FREQUENCY/DURATION.

IRRIGATION CONTROLLER SHALL BE CONFIGURED TO RUN ALL ZONES ON SOAK CYCLES.

STATION RUN-TIMES ARE SHOWN IN MINUTES PER DAY (MIN) AND DAYS PER WEEK (DW)

	WINTER		SPRING		SUMMER		FALL	
	PRE-EST.	POST-EST.	PRE-EST.	POST-EST.	PRE-EST.	POST-EST.	PRE-EST.	POST-EST.
LANDSCAPE AREAS								
12, 13, 22, 30 (TREE/RWS/MODERATE)	5 MIN/3 DW	10 MIN/2 DW	18 MIN/3 DW	35 MIN/2 DW	22 MIN/3 DW	43 MIN/2 DW	9 MIN/3 DW	16 MIN/2 DW
27, 28 (TREE/RWS/LOW)	5 MIN/2 DW	9 MIN/1 DW	7 MIN/2 DW	14 MIN/1 DW	9 MIN/2 DW	18 MIN/1 DW	4 MIN/2 DW	8 MIN/1 DW
6, 14, 32, 37 (SHRUB/DRIP/MODERATE)	5 MIN/3 DW	10 MIN/2 DW	18 MIN/3 DW	35 MIN/2 DW	22 MIN/3 DW	43 MIN/2 DW	9 MIN/3 DW	16 MIN/2 DW
3, 5, 7, 10, 11 15-20, 23, 24, 25, 29, 31, 33-36 (SHRUB/DRIP/LOW)	5 MIN/2 DW	9 MIN/1 DW	7 MIN/2 DW	14 MIN/1 DW	9 MIN/2 DW	18 MIN/1 DW	4 MIN/2 DW	8 MIN/1 DW
SPECIAL LANDSCAPE AREAS								
1, 2, 4, 8, 9, 21, 26 (TURF/ROTARY/HIGH)	7 MIN/6 DW	13 MIN/3 DW	44 MIN/6 DW	87 MIN/3 DW	31 MIN/6 DW	62 MIN/3 DW	13 MIN/6 DW	26 MIN/3 DW

"I HAVE COMPLIED WITH THE CRITERIA OF THE ORDINANCE AND APPLIED THEM ACCORDINGLY FOR THE EFFICIENT USE OF WATER IN THE IRRIGATION DESIGN PLAN."

Karen N. Folsom

KAREN FOLSOM — DATE: 08/31/26
WESTWOOD PROFESSIONAL SERVICES — R.L.A. #4994
EXPIRES: 3/31/2027

VALVE CALLOUT

- VALVE NUMBER
- Ø.ØØ GPM — Ø.ØØ APPLICATION RATE (IN/H)
- ØØ PSI — RWS-DRIP-ROTARY
- VALVE SIZE

811 Know what's below. Call before you dig.

Westwood
Westwood Professional Services, Inc.
8200 STONERIDGE MALL ROAD, SUITE 300
PLEASANTON, CA 94588
T: 925.223.8340
wwlandsca@pw.com

NO.	DESCRIPTION	DATE	BY	APP DATE	APP

ANTELOPE, CALIFORNIA

NHRPD SIERRA CREEK PARK

7781 WATT AVE

IRRIGATION LEGEND & NOTES

DATE: 08/31/26
DRAFTER: TH, AL, CY
DESIGNER: KF, TH
CHECKED: KF, JG
PROJECT NO. 41541

LICENSED LANDSCAPE ARCHITECT — KAREN N. FOLSOM #4994 — Signature — 03/31/27 Renewal Date — 08/31/26 Date — STATE OF CALIFORNIA

L4.0

Last Saved by: ALaux
Plot Date/Time: Wed 09/02/26 9:09 AM
Drawing: N:_ODE\Pleasanton\41541 NHRPD Sierra Creek Park\Landscape\ConstPlans\41541-R

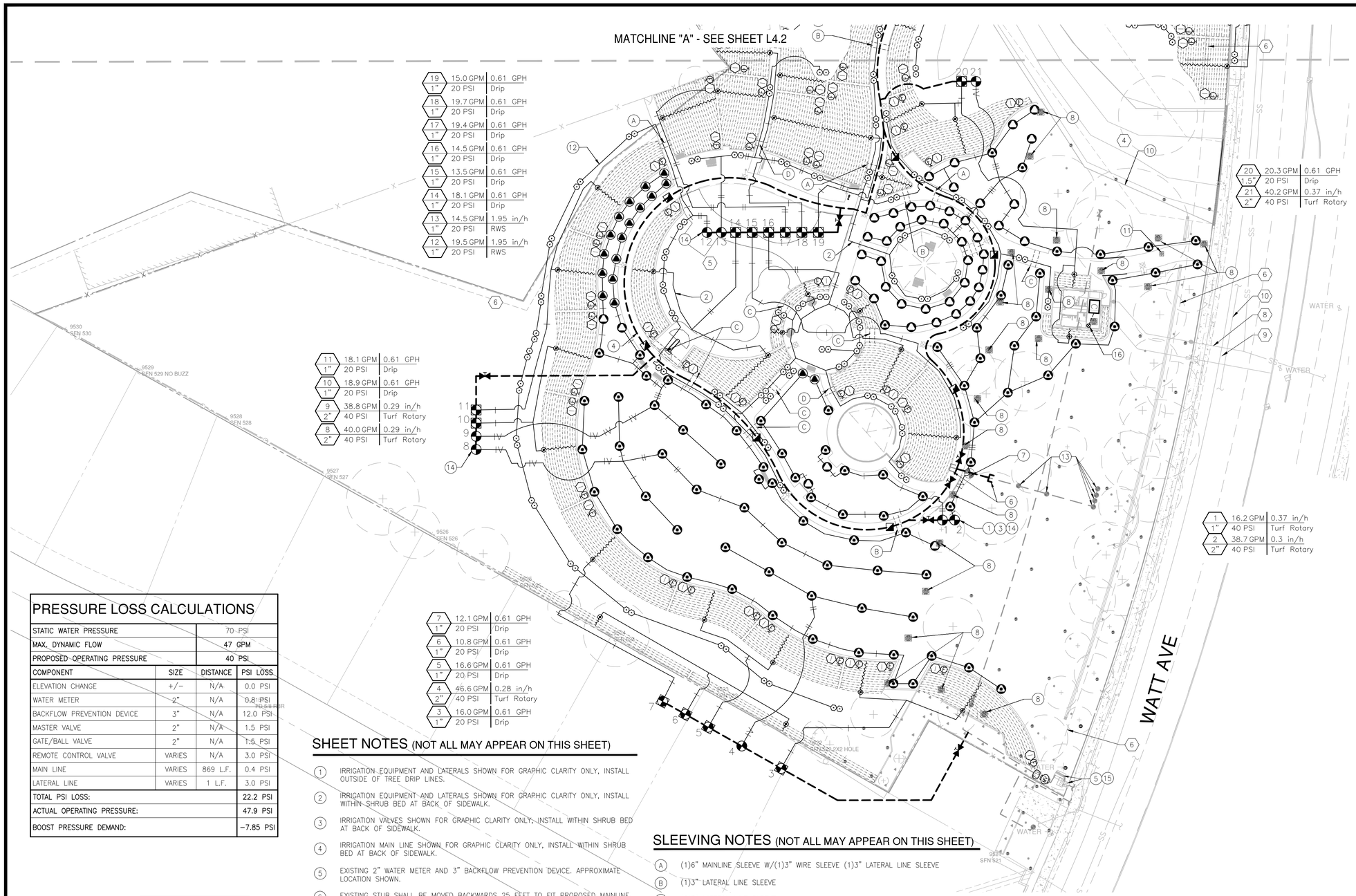

19	15.0 GPM	0.61 GPH	Drip
1"	20 PSI		
18	19.7 GPM	0.61 GPH	Drip
1"	20 PSI		
17	19.4 GPM	0.61 GPH	Drip
1"	20 PSI		
16	14.5 GPM	0.61 GPH	Drip
1"	20 PSI		
15	13.5 GPM	0.61 GPH	Drip
1"	20 PSI		
14	18.1 GPM	0.61 GPH	Drip
1"	20 PSI		
13	14.5 GPM	1.95 in/h	RWS
1"	20 PSI		
12	19.5 GPM	1.95 in/h	RWS
1"	20 PSI		

11	18.1 GPM	0.61 GPH	Drip
1"	20 PSI		
10	18.9 GPM	0.61 GPH	Drip
1"	20 PSI		
9	38.8 GPM	0.29 in/h	Turf Rotary
2"	40 PSI		
8	40.0 GPM	0.29 in/h	Turf Rotary
2"	40 PSI		

7	12.1 GPM	0.61 GPH	Drip
1"	20 PSI		
6	10.8 GPM	0.61 GPH	Drip
1"	20 PSI		
5	16.6 GPM	0.61 GPH	Drip
1"	20 PSI		
4	46.6 GPM	0.28 in/h	Turf Rotary
2"	40 PSI		
3	16.0 GPM	0.61 GPH	Drip
1"	20 PSI		

20	20.3 GPM	0.61 GPH	Drip
1.5"	20 PSI		
21	40.2 GPM	0.37 in/h	Turf Rotary
2"	40 PSI		

1	16.2 GPM	0.37 in/h	Turf Rotary
1"	40 PSI		
2	38.7 GPM	0.3 in/h	Turf Rotary
2"	40 PSI		

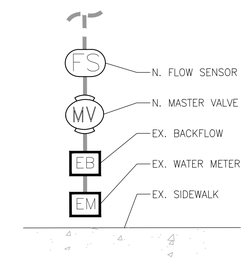

POINT OF CONNECTION ENLARGEMENT PLAN

NOT TO SCALE

PRESSURE LOSS CALCULATIONS

STATIC WATER PRESSURE			70 PSI
MAX. DYNAMIC FLOW			47 GPM
PROPOSED OPERATING PRESSURE			40 PSI
COMPONENT	SIZE	DISTANCE	PSI LOSS
ELEVATION CHANGE	+/-	N/A	0.0 PSI
WATER METER	2"	N/A	0.81 PSI
BACKFLOW PREVENTION DEVICE	3"	N/A	12.0 PSI
MASTER VALVE	2"	N/A	1.5 PSI
GATE/BALL VALVE	2"	N/A	1.5 PSI
REMOTE CONTROL VALVE	VARIES	N/A	3.0 PSI
MAIN LINE	VARIES	869 L.F.	0.4 PSI
LATERAL LINE	VARIES	1 L.F.	3.0 PSI
TOTAL PSI LOSS:			22.2 PSI
ACTUAL OPERATING PRESSURE:			47.9 PSI
BOOST PRESSURE DEMAND:			-7.85 PSI

SHEET NOTES (NOT ALL MAY APPEAR ON THIS SHEET)

1. IRRIGATION EQUIPMENT AND LATERALS SHOWN FOR GRAPHIC CLARITY ONLY, INSTALL OUTSIDE OF TREE DRIP LINES.
2. IRRIGATION EQUIPMENT AND LATERALS SHOWN FOR GRAPHIC CLARITY ONLY, INSTALL WITHIN SHRUB BED AT BACK OF SIDEWALK.
3. IRRIGATION VALVES SHOWN FOR GRAPHIC CLARITY ONLY, INSTALL WITHIN SHRUB BED AT BACK OF SIDEWALK.
4. IRRIGATION MAIN LINE SHOWN FOR GRAPHIC CLARITY ONLY, INSTALL WITHIN SHRUB BED AT BACK OF SIDEWALK.
5. EXISTING 2" WATER METER AND 3" BACKFLOW PREVENTION DEVICE. APPROXIMATE LOCATION SHOWN.
6. EXISTING STUB SHALL BE MOVED BACKWARDS 25 FEET TO FIT PROPOSED MAINLINE.
7. EXISTING VALVE SHALL BE MOVED BACKWARDS 25 FEET ALONG WITH EXISTING MAINLINE.
8. REMOVE EXISTING ROTOR HEADS AND CAP PIPE. DELIVER TO DISTRICT REP.
9. STUB MAINLINE FOR FUTURE DEVELOPMENT.
10. TOP OF CREEK.
11. REMOVE EXISTING SPRAY HEADS AND CAP PIPE. DELIVER TO DISTRICT REP.
12. IRRIGATION EQUIPMENT SHOWN OUTSIDE OF PROPERTY LINE GRAPHICALLY, INSTALL WITHIN SHRUB BED AT BACK OF SIDEWALK.
13. EXISTING VALVE TO REMAIN. PROTECT IN PLACE. EXISTING VALVE TO BE CONNECTED TO NEW CONTROLLER. FOR NEW CONTROLLER INFORMATION SEE IRRIGATION LEGEND ON SHEET L4.0. CONTRACTOR TO FIELD VERIFY EXISTING VALVES.
14. ALL VALVE BOXES TO BE PLACED IN SHRUB AREAS. NO VALVE BOXES ARE TO BE PLACED IN TURF LAWN.
15. SEE POINT OF CONNECTION ENLARGEMENT. SEE THIS SHEET.
16. ROOF MOUNT SOLAR SYNC SENSOR (RAIN SENSOR). MOUNT ON WEST OR SOUTH SIDE TO MAXIMIZE SOLAR EXPOSURE

SLEEVING NOTES (NOT ALL MAY APPEAR ON THIS SHEET)

- (A) (1)6" MAINLINE SLEEVE W/(1)3" WIRE SLEEVE (1)3" LATERAL LINE SLEEVE
- (B) (1)3" LATERAL LINE SLEEVE
- (C) (2)3" LATERAL LINE SLEEVE
- (D) (3)3" LATERAL LINE SLEEVES

RENOVATION NOTES

1. CONTRACTOR TO SUPPLY SHOP DRAWINGS ON IRRIGATION EQUIPMENT.
2. CONTRACTOR SHALL BE RESPONSIBLE FOR ADJUSTING AND MODIFYING EXISTING IRRIGATION TO NEW PAVEMENT AND EDGE LIMITS AND ASSURE FULL COVERAGE. EXISTING IRRIGATION DISTURBED DURING CONSTRUCTION SHALL BE CORRECTED AND CONTRACTOR TO ENSURE A FULLY FUNCTIONING IRRIGATION SYSTEM AFTER PROJECT COMPLETION. CONTRACTOR TO ASSESS THE ENTIRE IRRIGATION SYSTEM AND REPORT/DOCUMENT FINDINGS TO THE DISTRICT.
3. CONTRACTOR TO FIELD VERIFY EXISTING IRRIGATION SYSTEM AND ADJUST EXISTING IRRIGATION AS NECESSARY FOR FULL COVERAGE. EXISTING SPRAY HEAD LOCATION AND/OR ROTORS MAY REQUIRE ADJUSTMENT OR REPLACEMENT. EXISTING IRRIGATION SHALL BE FULLY OPERABLE AFTER CONSTRUCTION.
4. VALVES AND QUICK COUPLERS SHALL BE GROUPED TOGETHER AND INSTALLED IN SHRUB BEDS, UNLESS OTHERWISE INDICATED.

SHEET NOTES

1. BIOFILTRATION AREA WITH PLANTING
2. COMMUNITY GARDEN
3. PARKING LOT
4. SIERRA CREEK
5. PLAY AREA
6. PUE
7. FUTURE PUE
8. SEWER LINE
9. WATER LINE
10. STORM DRAIN LINE

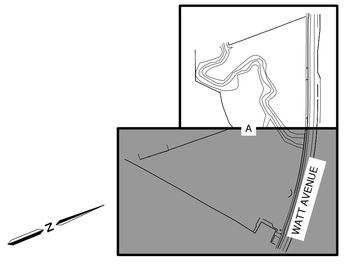

LOCATION MAP

1"=3000'

PIPING SCHEDULE

(A) SEE SLEEVING NOTES FOR SIZE	
SLEEVE SCH 40 PVC PIPE	
1-1/2"	MAINLINE SIZE
3/4"	LATERAL SIZE
1"	LATERAL SIZE
1-1/4"	LATERAL SIZE
1-1/2"	LATERAL SIZE
2"	LATERAL SIZE

0 15 30 60

SCALE: 1" = 30'

Know what's below. Call before you dig.

Westwood
Westwood Professional Services, Inc.
6200 STONERIDGE MALL ROAD, SUITE 330
PLEASANTON, CA 94588
T: 925.223.8340
westwoodps.com

NO.	DESCRIPTION	DATE	BY	APP. DATE	APP.

ANTELOPE, CALIFORNIA

NHRPD SIERRA CREEK PARK

7781 WATT AVE IRRIGATION PLAN

DATE: 08/31/26
DRAFTER: TH, AL, CY
DESIGNER: KF, TH
CHECKED: KF, JG
PROJECT NO. 41541

LICENSED LANDSCAPE ARCHITECT — KARIN N. FOLSOM — Signature — 03/31/27 Renewal Date — 08/31/26 Date — STATE OF CALIFORNIA

L4.1

Last Saved by: ALsjo
Plot Date/Time: 8/31/2026 9:10 AM
Drawing: N:_ODE\Pleasanton\41541 NRPPD Sierra Creek Park\Landscape\ConstPlans\41541-IR

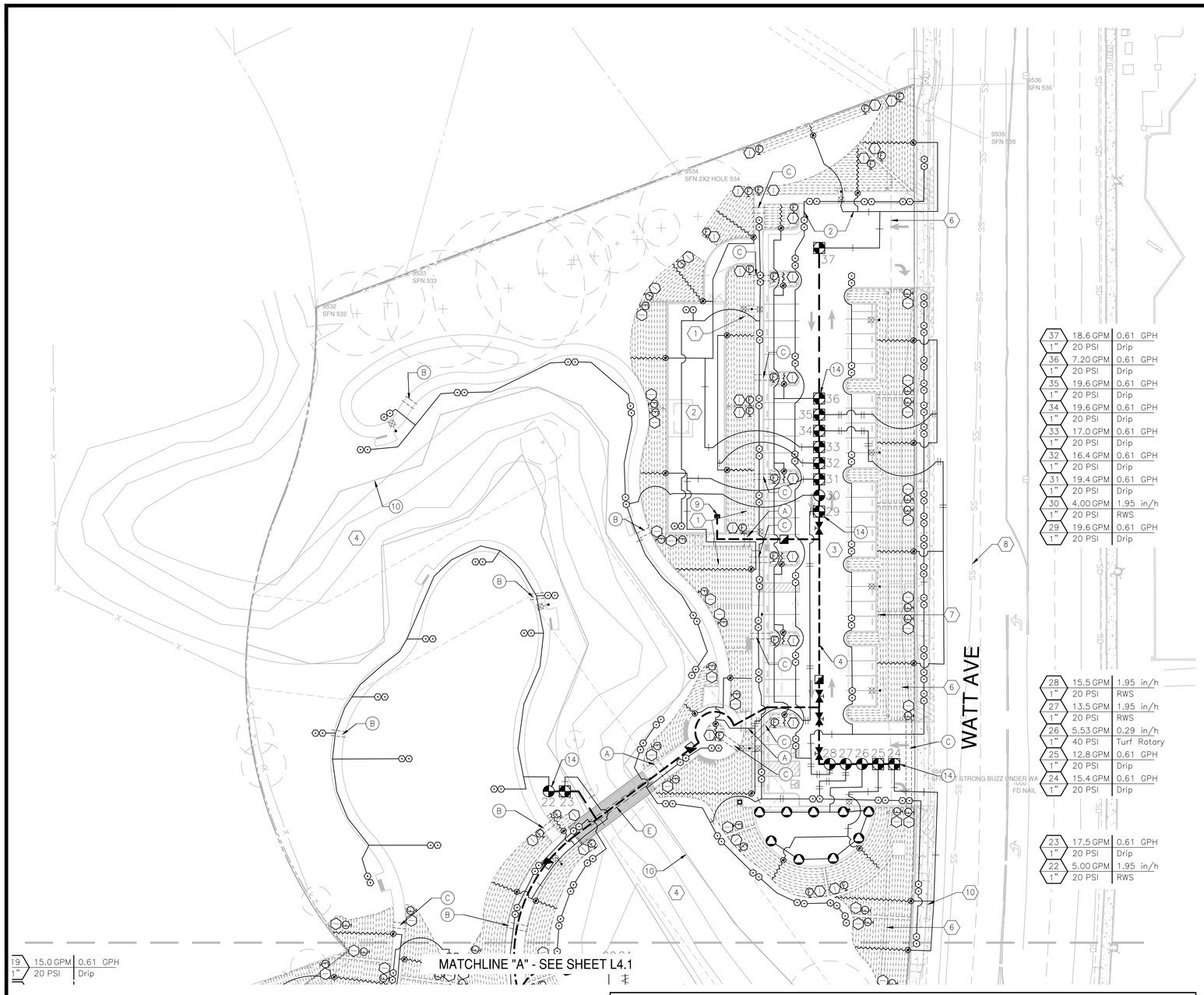

37	18.6 GPM	0.61 GPH
1"	20 PSI	Drip
36	7.20 GPM	0.61 GPH
1"	20 PSI	Drip
35	19.6 GPM	0.61 GPH
1"	20 PSI	Drip
34	19.6 GPM	0.61 GPH
1"	20 PSI	Drip
33	17.0 GPM	0.61 GPH
1"	20 PSI	Drip
32	16.4 GPM	0.61 GPH
1"	20 PSI	Drip
31	19.4 GPM	0.61 GPH
1"	20 PSI	Drip
30	4.00 GPM	1.95 in/h
1"	20 PSI	RWS
29	19.6 GPM	0.61 GPH
1"	20 PSI	Drip

28	15.5 GPM	1.95 in/h
1"	20 PSI	RWS
27	13.5 GPM	1.95 in/h
1"	20 PSI	RWS
26	5.53 GPM	0.29 in/h
1"	40 PSI	Turf Rotary
25	12.8 GPM	0.61 GPH
1"	20 PSI	Drip
24	15.4 GPM	0.61 GPH
1"	20 PSI	Drip

23	17.5 GPM	0.61 GPH
1"	20 PSI	Drip
22	5.00 GPM	1.95 in/h
1"	20 PSI	RWS

19	15.0 GPM	0.61 GPH
1"	20 PSI	Drip

SHEET NOTES (NOT ALL MAY APPEAR ON THIS SHEET)

1. IRRIGATION EQUIPMENT AND LATERALS SHOWN FOR GRAPHIC CLARITY ONLY, INSTALL OUTSIDE OF TREE DRIP LINES.
2. IRRIGATION EQUIPMENT AND LATERALS SHOWN FOR GRAPHIC CLARITY ONLY, INSTALL WITHIN SHRUB BED AT BACK OF SIDEWALK.
3. IRRIGATION VALVES SHOWN FOR GRAPHIC CLARITY ONLY, INSTALL WITHIN SHRUB BED AT BACK OF SIDEWALK.
4. IRRIGATION MAIN LINE SHOWN FOR GRAPHIC CLARITY ONLY, INSTALL WITHIN SHRUB BED AT BACK OF SIDEWALK.
5. EXISTING 2" WATER METER AND 3" BACKFLOW PREVENTION DEVICE. APPROXIMATE LOCATION SHOWN.
6. EXISTING STUB SHALL BE MOVED BACKWARDS 25 FEET TO FIT PROPOSED MAINLINE.
7. EXISTING VALVE SHALL BE MOVED BACKWARDS 25 FEET ALONG WITH EXISTING MAINLINE.
8. REMOVE EXISTING ROTOR HEADS AND CAP PIPE. DELIVER TO DISTRICT REP.
9. STUB MAINLINE FOR FUTURE DEVELOPMENT.
10. TOP OF CREEK.
11. REMOVE EXISTING SPRAY HEADS AND CAP PIPE. DELIVER TO DISTRICT REP.
12. IRRIGATION EQUIPMENT SHOWN OUTSIDE OF PROPERTY LINE GRAPHICALLY, INSTALL WITHIN SHRUB BED AT BACK OF SIDEWALK.
13. EXISTING VALVE TO REMAIN. PROTECT IN PLACE. EXISTING VALVE TO BE CONNECTED TO NEW CONTROLLER. FOR NEW CONTROLLER INFORMATION SEE IRRIGATION LEGEND ON SHEET L4.0. CONTRACTOR TO FIELD VERIFY EXISTING VALVES.
14. ALL VALVE BOXES TO BE PLACED IN SHRUB AREAS. NO VALVE BOXES ARE TO BE PLACED IN TURF LAWN.
15. SEE POINT OF CONNECTION ENLARGEMENT. SEE SHEET L4.1.
16. ROOF MOUNT SOLAR SYNC SENSOR (RAIN SENSOR). MOUNT ON WEST OR SOUTH SIDE TO MAXIMIZE SOLAR EXPOSURE

SLEEVING NOTES (NOT ALL MAY APPEAR ON THIS SHEET)

- (A) (1)6" MAINLINE SLEEVE W/(1)3" WIRE SLEEVE (1)3" LATERAL LINE SLEEVE
- (B) (1)3" LATERAL LINE SLEEVE
- (C) (2)3" LATERAL LINE SLEEVE
- (D) (3)3" LATERAL LINE SLEEVES
- (E) SLEEVING UNDER BRIDGE. (1)6" MAINLINE SLEEVE W/(1)3" WIRE SLEEVE (1)3" LATERAL LINE SLEEVE. SEE DETAIL 6/L7.1

RENOVATION NOTES

1. CONTRACTOR TO SUPPLY SHOP DRAWINGS ON IRRIGATION EQUIPMENT.
2. CONTRACTOR SHALL BE RESPONSIBLE FOR ADJUSTING AND MODIFYING EXISTING IRRIGATION TO NEW PAVEMENT AND EDGE LIMITS AND ASSURE FULL COVERAGE. EXISTING IRRIGATION DISTURBED DURING CONSTRUCTION SHALL BE CORRECTED AND CONTRACTOR TO ENSURE A FULLY FUNCTIONING IRRIGATION SYSTEM AFTER PROJECT COMPLETION. CONTRACTOR TO ASSESS THE ENTIRE IRRIGATION SYSTEM AND REPORT/DOCUMENT FINDINGS TO THE DISTRICT.
3. CONTRACTOR TO FIELD VERIFY EXISTING IRRIGATION SYSTEM AND ADJUST EXISTING IRRIGATION AS NECESSARY FOR FULL COVERAGE. EXISTING SPRAY HEAD LOCATION AND/OR ROTORS MAY REQUIRE ADJUSTMENT OR REPLACEMENT. EXISTING IRRIGATION SHALL BE FULLY OPERABLE AFTER CONSTRUCTION.

SHEET NOTES

- (1) BIOFILTRATION AREA WITH PLANTING
- (2) COMMUNITY GARDEN
- (3) PARKING LOT
- (4) SIERRA CREEK
- (5) PLAY AREA
- (6) PUE
- (7) FUTURE PUE
- (8) SEWER LINE
- (9) WATER LINE
- (10) STORM DRAIN LINE

PIPING SCHEDULE

(A) SEE SLEEVING NOTES FOR SIZE	
SLEEVE	SCH 40 PVC PIPE
1-1/2"	MAINLINE SIZE
3/4"	LATERAL SIZE
1"	LATERAL SIZE
1-1/4"	LATERAL SIZE
1-1/2"	LATERAL SIZE
2"	LATERAL SIZE

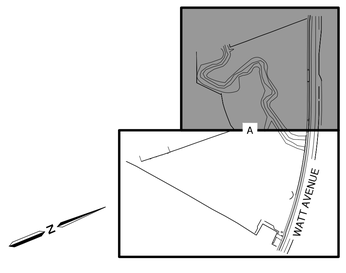

LOCATION MAP

1"=300'

SIERRA CREEK PARK - RUNTIME SCHEDULE

IRRIGATION SCHEDULE - WARM SEASON (5 MONTHS: MAY - SEPTEMBER)

PROGRAM	STATION/VALVE	APPROX. GPM	START TIME	MON.	TUES.	WED.	THURS.	FRI.	SAT.	SUN.
A - GRASS/ ROTOR	E1, E6	77.0	10:00 PM	45 MIN		45 MIN		45 MIN		
	E2, E3	57.0	10:45 PM	45 MIN		45 MIN		45 MIN		
	E4, E5	55.0	11:30 PM	45 MIN		45 MIN		45 MIN		
A - GRASS / ROTARY	1, 2, 26	60.4	12:15 AM	45 MIN		45 MIN		45 MIN		
	4, 8	86.6	1:00 AM	45 MIN		45 MIN		45 MIN		
	9, 21	79.0	1:45 AM	45 MIN		45 MIN		45 MIN		
C - TREES / RWS	12, 13, 22, 27, 28, 30	72.0	2:30 AM	60 MIN		60 MIN		60 MIN		
D - SHRUBS / DRIP	3, 10, 15, 25, 37	79.8	3:30 AM	60 MIN		60 MIN		60 MIN		
	5, 6, 11, 17, 19	79.9	4:30 AM	60 MIN		60 MIN		60 MIN		
	7, 16, 23, 31, 32	79.9	5:30 AM	60 MIN		60 MIN		60 MIN		
	14, 24, 33, 34, 36	77.3	6:30 AM	60 MIN		60 MIN		60 MIN		
	18, 20, 29, 35	79.2	7:30 AM	60 MIN		60 MIN		60 MIN		

0 15 30 60

SCALE: 1" = 30'

Know what's **below.** **Call** before you dig.

Westwood
Westwood Professional Services, Inc.
6200 STONERIDGE MALL ROAD, SUITE 330
PLEASANTON, CA 94588
T: 925.223.8340
www.wsp-pa.com

NO.	DESCRIPTION	DATE	BY	APP. DATE	APP.

ANTELOPE, CALIFORNIA

NHRPD SIERRA CREEK PARK

7781 WATT AVE IRRIGATION PLAN

DATE: 08/31/26
DRAFTER: TH, AL, CY
DESIGNER: KF, TH
CHECKED: KF, JG

PROJECT NO.
41541

LICENSED LANDSCAPE ARCHITECT
KARIN N. FOLSOM
Signature
03/31/27
Renewal Date
08/31/26
Date
STATE OF CALIFORNIA

L4.2

Last Saved by: ALopez
Plot Date: Wednesday, August 20, 2026 9:10 AM
Drawing: N:_ODE\Pleasanton\41541 NHRPD Sierra Creek Park\Landscape\ConstPlans\41541-IR

GENERAL PLANTING NOTES

GENERAL

1. ANY AND ALL PORTIONS OF THIS WORK SHALL BE CONSTRUCTED IN COMPLIANCE WITH ALL APPLICABLE RULES AND REGULATIONS AS SET FORTH BY LOCAL MUNICIPALITIES, STATE AND NATIONAL AGENCIES. IN THE EVENT THERE IS A CONFLICT WITH THESE PLANS AND THE AGENCIES STATED ABOVE, THE GOVERNING BODY'S REGULATIONS SHALL PREVAIL.
2. PRIOR TO BIDDING AND COMMENCEMENT OF SITE WORK, THE CONTRACTOR SHALL BECOME FAMILIAR WITH AND EXAMINE CONDITIONS OF THE PROJECT SITE, VERIFYING LOCATIONS OF ALL EXISTING UTILITIES, STRUCTURES AND SERVICES. LOCATIONS OF ITEMS SHOWN ON THESE PLANS ARE ONLY APPROXIMATIONS. ANY DISCREPANCIES DISCOVERED SHALL BE REPORTED TO THE LANDSCAPE ARCHITECT. FAILURE TO REPORT DISCREPANCIES TO THE LANDSCAPE ARCHITECT BEFORE COMMENCEMENT OF SITE WORK IMPLIES ACCEPTANCE OF SITE CONDITIONS AND COSTS ASSOCIATED WITH CORRECTING PLANTING RELATED INSTALLATIONS.
3. CONTRACTOR SHALL PURCHASE AND PROVIDE ALL LABOR, MATERIALS, AND EQUIPMENT NECESSARY TO COMPLETE THE LANDSCAPE WORK (I.E. TREE PLANTING, SHRUB PLANTING, ETC.) AS SHOWN ON THE DRAWINGS AND AS SPECIFIED. THE CONTRACTOR SHALL BE RESPONSIBLE FOR PROTECTION OF THESE ITEMS UNTIL THE PROJECT IS COMPLETED.
4. ALL SCALED DIMENSIONS ARE APPROXIMATE. PRIOR TO PROCEEDING WITH ANY WORK, THE CONTRACTOR SHALL CAREFULLY CHECK AND VERIFY ALL DIMENSIONS AND QUANTITIES AND SHALL IMMEDIATELY INFORM THE DISTRICT'S REPRESENTATIVE OF ANY DISCREPANCY BETWEEN THE INFORMATION. NUMBERS PROVIDED ON THIS PLAN ARE FOR REFERENCE ONLY. THE NUMBER OF SYMBOLS SHOWN ON THE PLANS SHALL HAVE PRIORITY OVER THE NUMBERS GIVEN.

SOIL PREPARATION

1. THE LANDSCAPE CONTRACTOR SHALL INSPECT THE PLANTER AREAS FOR EXTREME COMPACTION PARTICULARLY AROUND CONSTRUCTION AREAS. CONTRACTOR SHALL PROVIDE MEANS FOR RIPPING TO A DEPTH OF TWELVE INCHES (12") ALL COMPACTED AREAS TO INSURE PROPER ROOT GROWTH OF NEW PLANTINGS.
2. CULTIVATE TOP SIX INCHES (6") OF SOIL IN ALL AREAS.
3. NO SOIL SHALL BE HANDLED OR WORKED WHEN IN A MUDDY CONDITION.
4. FINISH GRADE SHALL BE APPROVED BY THE OWNERS REPRESENTATIVE BEFORE ANY PLANTING BEGINS.
5. AN EVEN FINISHED GRADE WITH NO RIDGES OR DEPRESSIONS SHALL BE CAREFULLY MAINTAINED DURING OPERATIONS TO ENSURE PROPER SURFACE DRAINAGE.
6. SHRUB AREAS SHALL BE FINE GRADED TO WITHIN TWO INCH (2") BELOW ADJACENT SURFACES.
7. LAWN AREAS SHALL BE FINE GRADED TO WITHIN ONE INCH (1") BELOW ADJACENT SURFACES.
8. CONTRACTOR SHALL PERFORM SOILS ANALYSIS AND OBTAIN AMENDMENT RECOMMENDATIONS FROM SOIL LABORATORY PRIOR TO BEGINNING WORK AND AFTER BACKFILL SOIL HAS BEEN PLACED. CONTRACTOR SHALL AMEND SOILS PER MOST RECENT RECOMMENDATIONS. THE FOLLOWING, FOR BID PURPOSE ONLY, MINIMUM AMENDMENTS SHALL BE INCORPORATED INTO ALL PLANTED AREAS AND TILLED INTO THE SOIL TO A DEPTH OF SIX TO TWELVE INCHES (6"–12"):
   - –SOIL/SOD/TURF @ 20 LBS/1000 S.F.
   - –6–20–20 FERTILIZER @24 LBS/1000 S.F.
   - –ORGANIC COMPOST AT 4 CUBIC YARDS PER 1,000 SF.
   - –BACKFILL MIX, 1/3 NATIVE SOIL, MIXED WITH 2/3 SOIL AMENDMENT.
9. PRIOR TO SCHEDULING FINAL INSPECTIONS FOR THE BUILDING PERMIT, THE SOILS TEST REQUIREMENT MUST BE COMPLETED. SOILS TEST AND DOCUMENTATION VERIFYING THE IMPLEMENTATION OF THE SOILS TEST RECOMMENDATIONS SHALL BE SUBMITTED WITH THE CERTIFICATE OF COMPLETION TO THE COUNTY AS REQUIRED BY THE MWELO.

PLANT MATERIAL

1. SUBSTITUTIONS WILL NOT BE PERMITTED UNLESS APPROVED BY THE DISTRICT.
2. PLANTS SHALL BE SOUND, HEALTHY, VIGOROUS, FREE FROM NOXIOUS WEEDS, PLANT DISEASE, INSECT PESTS, OR THEIR EGGS, AND SHALL HAVE HEALTHY, NORMAL ROOT SYSTEMS AND COMPLY WITH ALL STATE AND LOCAL REGULATIONS.
3. PLANTS SHALL NOT BE PRUNED PRIOR TO DELIVERY EXCEPT AS AUTHORIZED BY THE OWNER'S REPRESENTATIVE. DO NOT "TOP" TREES.
4. ALL PLANT MATERIAL IS SUBJECT TO REVIEW AND APPROVAL BY THE OWNER PRIOR TO INSTALLATION. THE CONTRACTOR SHALL BE RESPONSIBLE FOR REPLACING ANY REJECTED MATERIAL.
5. CONTRACTOR SHALL PROVIDE PLANT MATERIAL DELIVERY TO JOB SITE. CONTRACTOR SHALL BE RESPONSIBLE FOR STORAGE, CARE, INSTALLATION, AND GUARANTEE FROM TIME OF DELIVERY. DO NOT STORE PLANT MATERIAL ON CONCRETE OR ASPHALT SURFACES.

WEED CONTROL

1. PRIOR TO PLANTING THE CONTRACTOR SHALL SPRAY A POST EMERGENT HERBICIDE TO KILL EXISTING WEEDS. ALLOW ONE (1) WEEK FOR WEEDS TO COMPLETELY DIE AND REMOVE FROM SITE.
2. AFTER PLANTING SHRUB BEDS AND PRIOR TO TOPDRESSING, APPLY RONSTAR–G(OR EQUAL) PRE–EMERGENT WEED CONTROL IN THE AMOUNTS SPECIFIED BY THE MANUFACTURER.

PLANTING OPERATIONS

1. ALL PLANTS SHALL BE PLANTED, STAKED, AND TIED ACCORDING TO THESE PLANS.
2. STAKE TREES AT THE LOWEST POINT WHERE THE TREE CAN SUPPORT ITSELF.
3. THOROUGHLY WATER TREES, SHRUBS, AND GROUNDCOVER IMMEDIATELY AFTER PLANTING.
4. RELOCATION OF TREES: IN THE EVENT THAT UNDERGROUND CONSTRUCTION WORK OR OBSTRUCTIONS ARE ENCOUNTERED IN EXCAVATION OF THE TREE HOLES, ALTERNATE LOCATIONS WILL BE SELECTED BY THE OWNER'S REPRESENTATIVE.
5. ALL TREES SHALL BE PRUNED TO REMOVE BROKEN AND DAMAGED LIMBS AND BRANCHES. NO OTHER PRUNING IS APPROVED.
6. 3" TOPDRESSING OF DECORATIVE MULCH (COLOR: BROWN) (MAXIMUM 2 INCH LENGTHS) TO BE INSTALLED PER DETAILS. WASH EXCESS BARK OFF LEAVES AND DO NOT ENGULF STEMS OF PLANTS AND GROUNDCOVER.
7. FERTILIZER TABLETS SHALL BE BEST–PAKS (20–10–5) PLANTER PACKETS PLACED IN ALL PLANTING PITS PER DETAILS.

PLANT ESTABLISHMENT AND MAINTENANCE PERIODS

1. THE LANDSCAPE CONTRACTOR SHALL PROVIDE AN ESTABLISHMENT PERIOD OF THIRTY (30) DAYS COMMENCING AT COMPLETION OF PLANT MATERIAL INSTALLATION.
2. APPROXIMATELY 30 DAYS AFTER INITIAL PLANTING, APPLY A BALANCED FERTILIZER TO TURF AND SHRUB AREAS PER MANUFACTURER'S RECOMMENDED RATES.
3. FOLLOWING PROJECT ACCEPTANCE, THE LANDSCAPE CONTRACTOR SHALL MAINTAIN THE INSTALLATION FOR THIRTY (30) DAYS INCLUDING MOWING AND MAINTENANCE OF SHRUBS, TREES, FERTILIZATION, REMOVING CLIPPINGS FROM SITE, EDGING, AND THE CONTROL OF WEEDS. ADJUSTMENTS TO THE IRRIGATION SYSTEM FOR TIME AND DURATION OF FLOWS AND REPLACEMENT AND ADJUSTMENTS TO HEADS AND EMITTERS ARE ALSO REQUIRED.
4. THE LANDSCAPE CONTRACTOR SHALL BE RESPONSIBLE FOR DISEASE AND PEST CONTROL DURING THE ESTABLISHMENT AND MAINTENANCE PERIODS.

ACCEPTANCE

1. COMPLETED WORK SHALL BE REVIEWED AND OBSERVED BY OWNER. ANY MODIFICATIONS REQUIRED TO MEET THE STANDARDS AS SET FORTH IN THESE LANDSCAPE DOCUMENTS SHALL BE SUBMITTED TO THE LANDSCAPE CONTRACTOR AND CORRECTED AT THE LANDSCAPE CONTRACTOR'S EXPENSE. CORRECTED ITEMS MUST BE APPROVED BY OWNER.
2. UPON FINAL ACCEPTANCE, LANDSCAPE CONTRACTOR SHALL INSTRUCT MAINTENANCE PERSONNEL AS TO THE OPERATION AND MAINTENANCE OF ALL LANDSCAPING.

GUARANTEE

1. ALL TREES AND SHRUBS SHALL BE GUARANTEED BY THE LANDSCAPE CONTRACTOR TO LIVE AND GROW IN A HEALTHY UPRIGHT POSITION DURING THE ESTABLISHMENT AND MAINTENANCE PERIODS. REPLACEMENT MATERIAL WILL BE AT THE LANDSCAPE CONTRACTOR'S EXPENSE EXCEPT IF VANDALIZED OR STOLEN.

WATER CONSERVATION STATEMENT

1. I HAVE COMPLIED WITH THE CRITERIA OF THE (STATE/CITY WATER CONSERVATION) ORDINANCE AND APPLIED THEM FOR THE EFFICIENT USE OF WATER IN THE LANDSCAPE DESIGN PLAN.
2. CHANGES TO THE APPROVED PLANS OR FIELD SUBSTITUTIONS SHALL NOT BE PERMITTED WITHOUT PRIOR WRITTEN APPROVAL FROM THE LANDSCAPE ARCHITECT AND THE CITY OF LATHROP. IF THE OWNER/CONTRACTOR DEVIATES FROM THE APPROVED PLAN WITHOUT PRIOR WRITTEN APPROVAL THEY WILL BE REQUIRED TO MAKE ANY CORRECTIONS, AT THEIR OWN EXPENSE, TO BRING THE LANDSCAPE AND IRRIGATION INTO COMPLIANCE WITH THE APPROVED PLANS AND THE STATE MODEL WATER EFFICIENT LANDSCAPE ORDINANCE.

CLOSE–OUT DOCUMENTS

1. AT THE COMPLETION OF THE PROJECT THE CONTRACTOR SHALL SUPPLY A "CERTIFICATE OF COMPLETION" DOCUMENT. THE DOCUMENT SHALL INCLUDE:

A. PROJECT INFORMATION SHEET THAT CONTAINS:
   1. DATE
   2. PROJECT NAME
   3. PROJECT APPLICANT NAME, TELEPHONE NUMBER, AND MAILING ADDRESS.
   4. PROJECT ADDRESS
   5. PROPERTY OWNER NAME, TELEPHONE NUMBER AND MAILING ADDRESS.

B. CERTIFICATION BY EITHER THE SIGNER OF THE LANDSCAPE DESIGN PLAN, THE DESIGNER OF THE IRRIGATION DESIGN PLAN OR THE LICENSED LANDSCAPE CONTRACTOR THAT THE LANDSCAPE PROJECT HAS BEEN INSTALLED PER THE APPROVED LANDSCAPE DOCUMENTATION PACKAGE.
   1. WHERE THERE HAVE BEEN SIGNIFICANT CHANGES MADE IN THE FIELD DURING CONSTRUCTION THESE "AS–BUILT" OR RECORD DRAWINGS SHALL BE INCLUDED WITH THE CERTIFICATION.
   2. A DIAGRAM OF THE IRRIGATION PLAN SHOWING HYDROZONES SHALL BE KEPT WITH THE IRRIGATION CONTROLLER FOR SUBSEQUENT MANAGEMENT PURPOSES.

C. IRRIGATION SCHEDULING PARAMETERS USED TO SET THE CONTROLLER.
D. LANDSCAPE AND IRRIGATION MAINTENANCE SCHEDULE
E. IRRIGATION AUDIT REPORT.
F. SOILS ANALYSIS REPORT IF NOT SUBMITTED WITH LANDSCAPE DOCUMENTATION PACKAGE AND DOCUMENTATION VERIFYING IMPLEMENTATION OF SOIL REPORT RECOMMENDATIONS.

MEADOW HYDROSEED MIX:

"I HAVE COMPLIED WITH THE CRITERIA OF THE ORDINANCE AND APPLIED THEM ACCORDINGLY FOR THE EFFICIENT USE OF WATER IN THE LANDSCAPE DESIGN PLAN."

Karen N. Folsom

KAREN FOLSOM — DATE: 08/31/26
WESTWOOD PROFESSIONAL SERVICES — R.L.A. #4994
EXPIRES: 3/31/2027

PLANT SCHEDULE

SYMBOL	BOTANICAL NAME	COMMON NAME	SIZE	APPROX SPACING	WATER USE	QTY	REMARKS
TREES							
ARB MUL	ARBUTUS X 'MARINA'	MARINA STRAWBERRY TREE MULTI–TRUNK	36" BOX	PER PLAN	LOW	2	F&B, FGR, MATCH, MULTI–TRUNK
LAG NAT	LAGERSTROEMIA INDICA X FAURIEI 'NATCHEZ'	NATCHEZ CRAPE MYRTLE	15 GAL	PER PLAN	LOW	19	F&B, FGR, MATCH, WHT FLW
LAU SAR	LAURUS NOBILIS SARATOGA	SARATOGA LAUREL	15 GAL	PER PLAN	LOW	30	F&B, FGR, MATCH, SL
PIS KEI	PISTACIA CHINENSIS 'KEITH DAVEY'	KEITH DAVEY CHINESE PISTACHE	15 GAL	PER PLAN	LOW	34	F&B, FGR, MATCH, SL
PLA RAC	PLATANUS RACEMOSA	CALIFORNIA SYCAMORE MULTI–TRUNK	15 GAL	PER PLAN	MODERATE	8	F&B, FGR, MATCH, SL
PLA COL	PLATANUS X ACERIFOLIA 'COLUMBIA'	COLUMBIA LONDON PLANE TREE	15 GAL	PER PLAN	MODERATE	14	F&B, FGR, MATCH, SL
QUE LOB	QUERCUS LOBATA	VALLEY OAK	15 GAL	PER PLAN	LOW	22	F&B, FGR
QUE WIS	QUERCUS WISLIZENI	INTERIOR LIVE OAK	15 GAL	PER PLAN	VERY LOW	3	F&B, FGR
ZEL SER	ZELKOVA SERRATA	JAPANESE ZELKOVA	15 GAL	PER PLAN	MODERATE	15	F&B, FGR, MATCH, SL
SHRUBS							
⊙	ARCTOSTAPHYLOS X 'HOWARD MCMINN'	HOWARD MCMINN MANZANITA	5 GAL	60" o.c.	LOW	78	F&B, FGR, MATCH, TRI SP, WHT FLW
Ⓐ	ARCTOSTAPHYLOS X 'SUNSET'	SUNSET MANZANITA	5 GAL	48" o.c.	LOW	131	F&B, FGR, MATCH, TRI SP, WHT FLW
Ⓨ	CEANOTHUS GRISEUS HORIZONTALIS 'YANKEE POINT'	YANKEE POINT CARMEL CREEPER	1 GAL	60" o.c.	LOW	171	F&B, FGR, MATCH, TRI SP, BLU FLW
CE	CEANOTHUS X 'DARK STAR'	DARK STAR WILD LILAC	5 GAL	72" o.c.	LOW	36	F&B, FGR, MATCH, TRI SP, BLU FLW
▲	CISTUS X PURPUREUS	ORCHID ROCKROSE	1 GAL	48" o.c.	LOW	111	F&B, FGR, MATCH, TRI SP, PINK FLW
CD	COTONEASTER DAMMERI 'LOWFAST'	BEARBERRY COTONEASTER	1 GAL	72" o.c.	LOW	21	F&B, FGR, MATCH, TRI SP, WHT FLW
⊙	DIETES BICOLOR	FORTNIGHT LILY	1 GAL	36" o.c.	LOW	147	F&B, FGR, MATCH, TRI SP, YLW FLW
H	HETEROMELES ARBUTIFOLIA	TOYON	15 GAL	96" o.c.	VERY LOW	15	F&B, FGR, MATCH, TRI SP, WHT FLW, HI BR
⊙	LANTANA MONTEVIDENSIS 'MONMA'	WHITE LIGHTNIN' TRAILING LANTANA	1 GAL	48" o.c.	LOW	110	F&B, FGR, MATCH, TRI SP, WHT FLW
Ⓛ	LAVANDULA ANGUSTIFOLIA 'HIDCOTE BLUE'	HIDCOTE BLUE ENGLISH LAVANDER	1 GAL	36" o.c.	LOW	51	F&B, FGR, MATCH, TRI SP, BLU FLW
Ⓜ	MUHLENBERGIA RIGENS	DEER GRASS	1 GAL	48" o.c.	LOW	166	FGR, MATCH, TRI SP
PL	PRUNUS LYONII	CATALINA CHERRY	15 GAL	72" o.c.	MODERATE	53	F&B, FGR, MATCH, WHT FLW
Ⓢ	SALVIA MICROPHYLLA 'HOT LIPS'	HOTLIPS SAGE	1 GAL	48" o.c.	LOW	143	F&B, FGR, MATCH, TRI SP, RED FLW
W	WESTRINGIA FRUTICOSA 'WYNABBIE GEM'	WYNABBIE GEM COAST ROSEMARY	1 GAL	48" o.c.	LOW	167	F&B, FGR, MATCH, TRI SP, WHT FLW
GROUND COVERS							
	ARCTOSTAPHYLOS X 'EMERALD CARPET'	EMERALD CARPET MANZANITA	1 GAL	36" o.c.	LOW	3,957 SF	
	FESTUCA RUBRA 'MOLATE'	MOLATE RED FESCUE	1 GAL	24" o.c.	MODERATE	5,398 SF	
	LOMANDRA FULVIATILIS 'SHARA'	SHARA MAT RUSH	1 GAL	36" o.c.	LOW	1,102 SF	
	HYDROSEED – NON–IRRIGATED NATIVE MIX	MIXED SPECIES – TBD	HYDROSEED		N/A	96,655 SF	
	MYOPORUM PARVIFOLIUM 'PUTAH CREEK'	TRAILING MYOPORUM	1 GAL	36" o.c.	LOW	5,398 SF	
	TURF EXISTING		NONE		HIGH	36,528 SF	PROTECT IN PLACE: IF DISTURBED – PATCH AND REPAIR
	TURF SOD BOLERO PLUS	90/10 FESCUE BLEND	SOD		HIGH	33,984 SF	
MISCELLANEOUS							
— — —	ROOT BARRIERS (DEEP ROOT UB18–2, OR EQUAL)					1,100 L.F.	SEE DETAIL 5, SHEET L8.0

PLANT LIST ABBREVIATIONS

BR GR	BRANCHED TO GROUND	MATCH	MATCHED SIZE, FORM, CALIPER, BRANCHING AND CULTIVAR. SELECT FORM ONE LOT, ONE GROWER, FOR GUARANTEED CONSISTENCY THROUGH LIFE OF PLANTS. IN GENERAL PLANTS WITHIN A GROUP OR AREA ARE TO BE MATCHED, UNLESS NOTED OTHERWISE.
DV	DWARF VARIETY		
F&B	FULL DENSE, BUSHY, VIGOROUS PLANTS, WITH YOUNG GROWTH CLOSELY SPACED ON BRANCHES		
FGR	FREE OF GIRDLING ROOTS	MULTI	MULTI STEMMED
FLW	FLOWER	SL	SINGLE, STRAIGHT, DOMINANT LEADER
GAL	GALLON CAN	TRI SP	TRIANGULARLY SPACED
HI BR	HIGH BRANCHED	TTW	TRAIN TO WALL
LO BR	LOW BRANCHED	VAR	VARIEGATED SPECIES

TREE CALLOUT

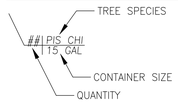

LANDSCAPE AREA SUMMARY

EXISTING TO REMAIN:	
TURF	36,528 SQ FT
SHRUB AREA	1,847 SQ FT
EUCALYPTUS GROVE	10,642 SQ FT
TOTAL AREA	49,017 SQ FT
PROPOSED:	
TURF	33,984 SQ FT
SHRUB AREA	51,147 SQ FT
HYDROSEED	96,655 SQ FT
TOTAL AREA	181,847 SQ FT
TOTAL LANDSCAPE AREA	230,864 SQ FT

Know what's below. Call before you dig.

Westwood
Westwood Professional Services, Inc.
6200 STONERIDGE MALL ROAD, SUITE 330
PLEASANTON, CA 94588
T: 925.223.8340
westwoodps.com

NO.	DESCRIPTION	DATE	BY	APP. DATE	APP.

ANTELOPE, CALIFORNIA

NHRPD SIERRA CREEK PARK

7781 WATT AVE

PLANTING LEGEND & NOTES

DATE: 08/31/26
DRAFTER: TH, AL, CY
DESIGNER: KF, TH
CHECKED: KF, JG
PROJECT NO. 41541

LICENSED LANDSCAPE ARCHITECT — KAREN N. FOLSOM — Karen N. Folsom — Signature — 03/31/27 Renewal Date — 08/31/26 Date — STATE OF CALIFORNIA

L5.0

Last Saved by: MALozoncio
Plot Date: Wednesday, August 13, 2025 9:14 AM
Drawing: N:_ODE\Pleasanton\41541 NRHPD Sierra Creek Park\Landscape\ConstPlans\41541-PT

PLANT SCHEDULE

SYMBOL	BOTANICAL NAME
TREES	
ARB MUL	ARBUTUS X 'MARINA'
LAG NAT	LAGERSTROEMIA INDICA X FAURIEI 'NATCHEZ'
LAU SAR	LAURUS NOBILIS SARATOGA
PIS KEI	PISTACIA CHINENSIS 'KEITH DAVEY'
PLA RAC	PLATANUS RACEMOSA
PLA COL	PLATANUS X ACERIFOLIA 'COLUMBIA'
QUE LOB	QUERCUS LOBATA
QUE WIS	QUERCUS WISLIZENI
ZEL SER	ZELKOVA SERRATA
SHRUBS	
	ARCTOSTAPHYLOS X 'HOWARD MCMINN'
A	ARCTOSTAPHYLOS X 'SUNSET'
Y	CEANOTHUS GRISEUS HORIZONTALIS 'YANKEE POINT'
CE	CEANOTHUS X 'DARK STAR'
	CISTUS X PURPUREUS
CD	COTONEASTER DAMMERI
	DIETES BICOLOR
H	HETEROMELES ARBUTIFOLIA
	LANTANA MONTEVIDENSIS 'MONMA'
	LAVANDULA ANGUSTIFOLIA 'HIDCOTE BLUE'
	MUHLENBERGIA RIGENS
PL	PRUNUS LYONII
	SALVIA MICROPHYLLA 'HOT LIPS'
	WESTRINGIA FRUTICOSA 'WYNABBIE GEM'
GROUND COVERS	
	ARCTOSTAPHYLOS X 'EMERALD CARPET'
	FESTUCA RUBRA 'MOLATE'
	LOMANDRA FULVIATILIS 'SHARA'
	HYDROSEED – NON-IRRIGATED NATIVE MIX
	MYOPORUM PARVIFOLIUM 'PUTAH CREEK'
	TURF EXISTING
	TURF SOD BOLERO PLUS
MISCELLANEOUS	
— — —	ROOT BARRIERS (DEEP ROOT UB18-2, OR EQUAL)

SHEET NOTES

1. BIOFILTRATION AREA WITH PLANTING
2. COMMUNITY GARDEN
3. PARKING LOT
4. SIERRA CREEK
5. PLAY AREA
6. PUE
7. FUTURE PUE
8. SEWER LINE
9. WATER LINE
10. STORM DRAIN LINE

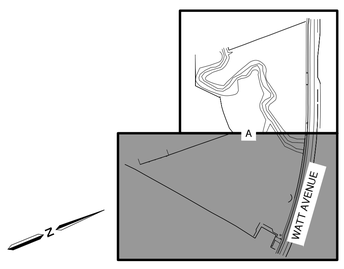

LOCATION MAP

1"=300'

"I HAVE COMPLIED WITH THE CRITERIA OF THE ORDINANCE AND APPLIED THEM ACCORDINGLY FOR THE EFFICIENT USE OF WATER IN THE LANDSCAPE DESIGN PLAN."

Karen N. Folsom

KAREN FOLSOM — DATE: 08/31/26
WESTWOOD PROFESSIONAL SERVICES — R.L.A. #4994
EXPIRES: 3/31/2027

SCALE: 1" = 30'

Know what's **below.** **Call** before you dig.

Westwood
Westwood Professional Services, Inc.
6200 STONERIDGE MALL ROAD, SUITE 330
PLEASANTON, CA 94588
T: 925.223.8340
westwoodps.com

NO.	DESCRIPTION	DATE	BY	APP. DATE	APP.

ANTELOPE, CALIFORNIA

NHRPD SIERRA CREEK PARK

7781 WATT AVE PLANTING PLAN

DATE: 08/31/26
DRAFTER: TH, AL, CY
DESIGNER: KF, TH
CHECKED: KF, JG
PROJECT NO. 41541

LICENSED LANDSCAPE ARCHITECT — KAREN N. FOLSOM #4994 — Signature — 03/31/27 Renewal Date — 08/31/26 Date — STATE OF CALIFORNIA

L5.1

Last Saved by: MALocsmo
Plot Scale: 1:1 Plot Offset: 0,0 Plot Date: 8/26/2026 9:14 AM
Drawing: N:_OBE\Pleasanton\41541 NHRPD Sierra Creek Park\Landscape\ConstPlans\41541-PT

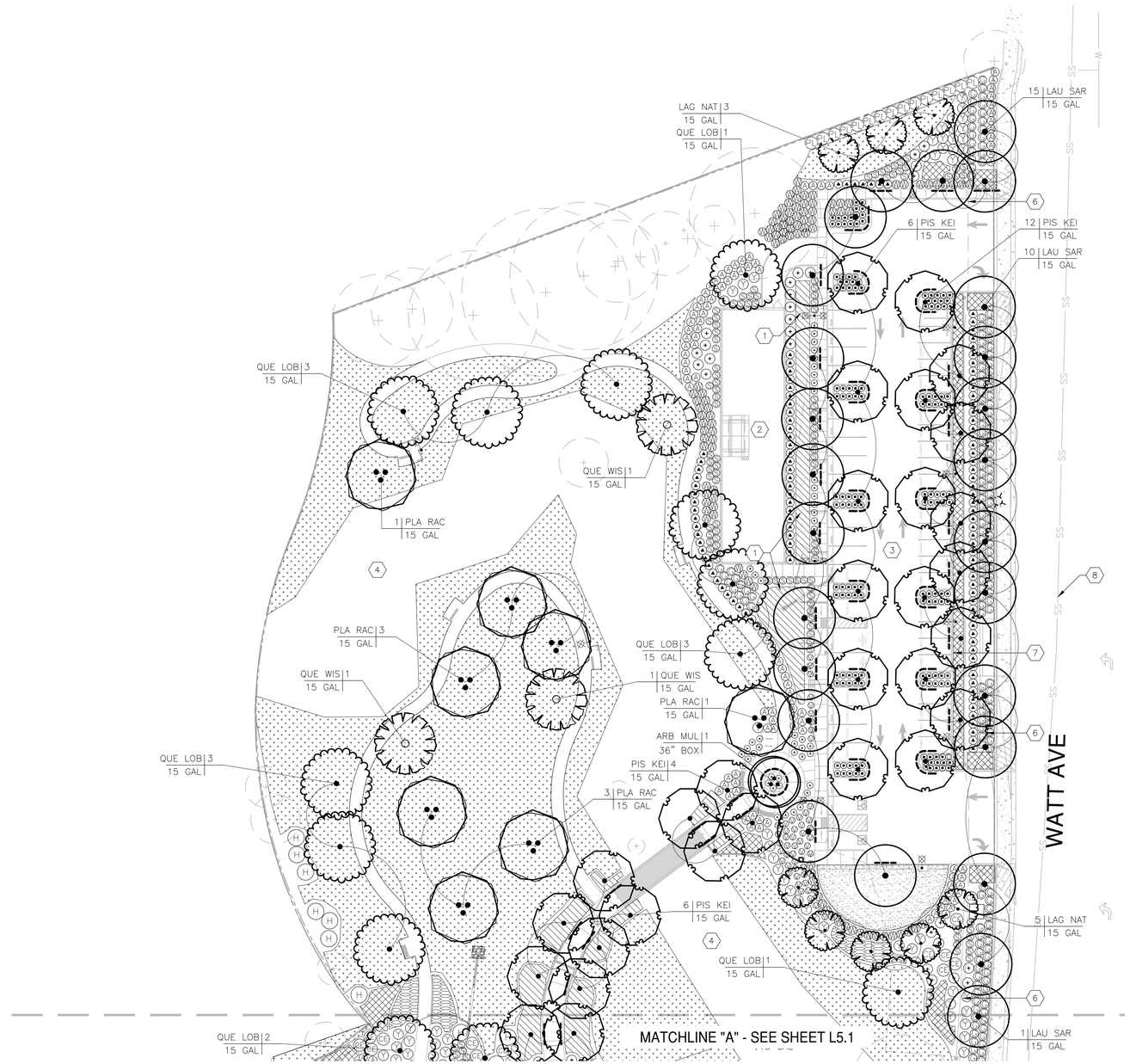

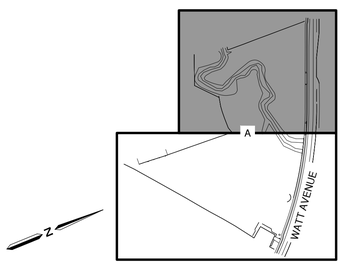

LOCATION MAP

1"=300'

PLANT SCHEDULE

SYMBOL	BOTANICAL NAME
TREES	
ARB MUL	ARBUTUS X 'MARINA'
LAG NAT	LAGERSTROEMIA INDICA X FAURIEI 'NATCHEZ'
LAU SAR	LAURUS NOBILIS SARATOGA
PIS KEI	PISTACIA CHINENSIS 'KEITH DAVEY'
PLA RAC	PLATANUS RACEMOSA
PLA COL	PLATANUS X ACERIFOLIA 'COLUMBIA'
QUE LOB	QUERCUS LOBATA
QUE WIS	QUERCUS WISLIZENI
ZEL SER	ZELKOVA SERRATA
SHRUBS	
	ARCTOSTAPHYLOS X 'HOWARD MCMINN'
A	ARCTOSTAPHYLOS X 'SUNSET'
Y	CEANOTHUS GRISEUS HORIZONTALIS 'YANKEE POINT'
CE	CEANOTHUS X 'DARK STAR'
	CISTUS X PURPUREUS
CD	COTONEASTER DAMMERI
	DIETES BICOLOR
H	HETEROMELES ARBUTIFOLIA
	LANTANA MONTEVIDENSIS 'MONMA'
	LAVANDULA ANGUSTIFOLIA 'HIDCOTE BLUE'
	MUHLENBERGIA RIGENS
PL	PRUNUS LYONII
	SALVIA MICROPHYLLA 'HOT LIPS'
	WESTRINGIA FRUTICOSA 'WYNABBIE GEM'
GROUND COVERS	
	ARCTOSTAPHYLOS X 'EMERALD CARPET'
	FESTUCA RUBRA 'MOLATE'
	LOMANDRA FULVIATILIS 'SHARA'
	HYDROSEED – NON-IRRIGATED NATIVE MIX
	MYOPORUM PARVIFOLIUM 'PUTAH CREEK'
	TURF EXISTING
	TURF SOD BOLERO PLUS
MISCELLANEOUS	
— — —	ROOT BARRIERS (DEEP ROOT UB18-2, OR EQUAL)

SHEET NOTES

1. BIOFILTRATION AREA WITH PLANTING
2. COMMUNITY GARDEN
3. PARKING LOT
4. SIERRA CREEK
5. PLAY AREA
6. PUE
7. FUTURE PUE
8. SEWER LINE
9. WATER LINE
10. STORM DRAIN LINE

SURFACE PARKING AREA SHADE REQUIREMENTS

Tree Size	15 Year Diameter	S.F. @100% Coverage Plan Symbol-1		S.F. @ 75% Coverage Plan Symbol-.75		S.F. @ 50% Coverage Plan Symbol-.5		S.F. @ 25% Coverage Plan Symbol-.25		Total Shade Coverage
		Qty.	Total S.F.	Qty.	Total S.F.	Qty.	Total S.F.	Qty.	Total S.F.	
>25' Diam.	20'	0	0	1	236	2	314	11	869	1,419 S.F.
>35' Diam.	30'	12	8,484	0	0	4	1,416	2	354	10,254 S.F.
>40' Diam.	35'	0	0	0	0	0	0	0	0	0 S.F.
Total Area Shaded by Trees =										11,673 S.F.
Total Paved Surface Parking Area =										19,511 S.F.
50% Shade Area (Required By CALGreen, Section 5.106.12.1 Shade Tree Standards) =										9,756 S.F.
Total Area Shaded by Trees =										11,673 S.F.
Total Percent of Surface Parking Area Shaded by Trees =										59.8%

*Excludes surface parking area(s) covered by solar photovoltaic shade structures or shade structures with roofing materials that comply with Table A5.106.11.2.2 in Appendix A5 per CALGreen 5.106.12.1 Exceptions.

"I HAVE COMPLIED WITH THE CRITERIA OF THE ORDINANCE AND APPLIED THEM ACCORDINGLY FOR THE EFFICIENT USE OF WATER IN THE LANDSCAPE DESIGN PLAN."

Karen N. Folsom

KAREN FOLSOM — DATE: 08/31/26
WESTWOOD PROFESSIONAL SERVICES — R.L.A. #4994
EXPIRES: 3/31/2027

0 15 30 60
SCALE: 1" = 30'

Know what's below. Call before you dig.

Westwood
Westwood Professional Services, Inc.
6200 STONERIDGE MALL ROAD, SUITE 330
PLEASANTON, CA 94588
T: 925.223.8340

NO.	DESCRIPTION	DATE	BY	APP. DATE	APP.

ANTELOPE, CALIFORNIA

NHRPD SIERRA CREEK PARK

7781 WATT AVE PLANTING PLAN

DATE: 08/31/26
DRAFTER: TH, AL, CY
DESIGNER: KF, TH
CHECKED: KF, JG
PROJECT NO. 41541

LICENSED LANDSCAPE ARCHITECT — KAREN N. FOLSOM — Signature — Renewal Date 08/31/26 — Date — STATE OF CALIFORNIA

L5.2

Last Saved by: MALozanoco
Plotted on: Aug 31, 2026-11:14 AM
Drawing: N:_ODE\Pleasanton\41541 NRHPD Sierra Creek Park\Landscape\ConstPlans\41541-PT

1. CONCRETE WALKWAY ADJACENT TO PARKING
2. BIORETENTION SOIL MEDIA. MINIMUM 18"
3. WATER-PROOF LINER
4. 9" GRAVEL LAYER, AASHTO #8 COURSE AGGREGATE
5. NON-WOVEN GEOTEXTILE MEMBRANE TO ALLOW INFILTRATION
6. UNCOMPACTED NATIVE SOIL
7. COMMUNITY GARDEN FENCE AND MOWCURB, REFER TO DETAIL 3, SHEET L6.0 AND DETAIL 1, SHEET L6.2
8. SANDY LOAM TOP LAYER MINIMUM 6" DEEP

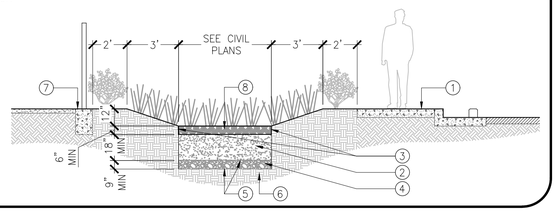

10 BIORETENTION SWALE

NOT TO SCALE

1. PLAYGROUND WALL WITH TROWEL FINISH (P.C. CONCRETE, 5 SACK CRUSHED AGGREGATE 3/4" MAX @ 2500 PSI) AS SHOWN ON PLANS
2. FINISHED GRADE, PLANTING AREA
3. #4 REBAR @ 24" O.C., 3" CLR ON ALL SIDES
4. #4 REBAR TOP AND BOTTOM CONTINUOUS
5. SURFACING PER PLANS: P.I.P. RUBBERIZED PLAY SURFACING, SEE DETAIL 9 ON THIS SHEET, OR EWF SURFACING, SEE DETAIL 8 ON THIS SHEET
6. 3/4" MAX AGGREGATE BASE COMPACTED TO 90% MIN RELATIVE COMPACTION
7. PROCESS AND PREPARE SUBGRADE PER GEOTECHNICAL RECOMMENDATIONS.

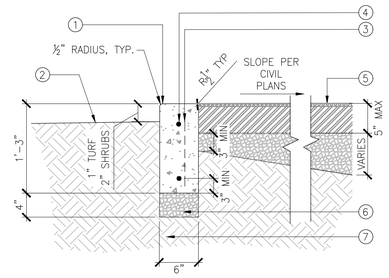

6 PLAYGROUND PERIMETER BAND AT P.I.P. RUBBER SURFACING OR EWF SURFACING

NOT TO SCALE

1. FINISH SURFACE OF CONCRETE WITH PORTLAND CEMENT CONCRETE, 5 SACK CRUSHED AGGREGATE 3/4 MAX 3500 PSI. SEE SITE FEATURES SCHEDULE AND PLANS FOR CONCRETE COLOR & FINISH.
2. CONTROL JOINT. SEE DETAIL 2 ON THIS SHEET. (LOCATIONS PER PLAN)
3. EXPANSION JOINT. SEE DETAIL 2 ON THIS SHEET.
4. CLASS II AGGREGATE BASE COURSE COMPACT TO 90% MIN PER ASTM D1557
5. PROCESS AND PREPARE SUBGRADE PER GEOTECHNICAL RECOMMENDATIONS
6. #3 REBAR B.W. 16" O.C.

NOTES:
A. REFER TO GEOTECHNICAL REPORT FOR RECOMMENDATIONS.
B. FOR VEHICULAR CONCRETE SECTION TO BE 6" OVER 6' OF BASE.
C. FINISH SURFACE OF CONCRETE WITH MEDIUM BROOM FINISH PERPENDICULAR TO PATH OF TRAVEL.

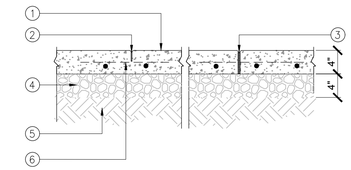

1 CONCRETE PAVING (PEDESTRIAN AND VEHICULAR)

NOT TO SCALE

1. BIKE RACK TYPE PER SITE FURNISHING LEGEND
2. CONCRETE FLATWORK SEE DETAIL 1, THIS SHEET
3. USE 1/2" x 3-3/4" EXPANSION ANCHOR BOLTS PROVIDED BY MANUFACTURER
4. S-2 SURFACE MOUNT PER MANUFACTURER

NOTE:
A. INSTALL PER MANUFACTURER'S RECOMMENDATIONS.

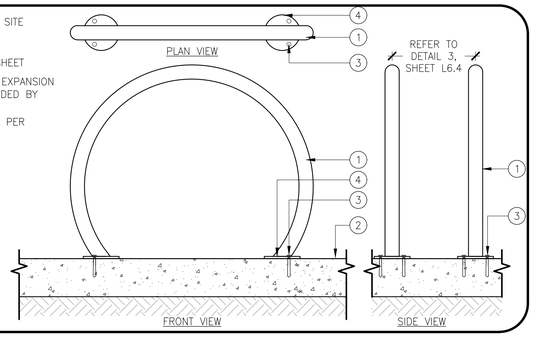

11 BIKE RACK

NOT TO SCALE

1. ENGINEERED WOOD FIBER
2. WEAR LAYER (1/2" MIN.), COLOR PER PLAN. INSTALL PER MANUFACTURERS RECOMMENDATION
3. CUSHION LAYER PER MANUFACTURER
4. CLASS II AGGREGATE BASE @ 90% MIN RELATIVE COMPACTION
5. 8 OZ./SQ YD NON WOVEN GEO-TEXTILE FABRIC.
6. CONCRETE CURB
7. PROCESS AND PREPARE SUBGRADE PER GEOTECHNICAL RECOMMENDATIONS.

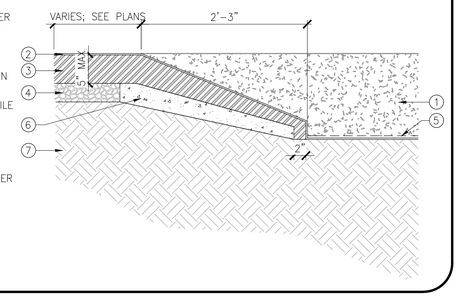

7 POUR-IN-PLACE RUBBER SURFACING INTO ENGINEERED WOOD FIBER

NOT TO SCALE

1. ELASTOMERIC SEALANT, MATCH TO COLOR OF CONCRETE (SEE SPECIFICATIONS).
2. BACKER ROD
3. DOWEL, 1/2" DIA X 1'0" @ 2'0" O.C. GREASE SLEEVE ONE END.
4. 3/8" ASPHALTIC IMPREGNATED EXPANSION JOINT
5. SEE DETAIL 1 THIS SHEET FOR CONCRETE DEPTH AND SUB-GRADE PREPARATION.
6. TOOLED CONTROL JOINT, 1/4" DEEP.

NOTE:
A. FINISH SURFACE OF CONCRETE WITH MEDIUM BROOM FINISH PERPENDICULAR TO PATH OF TRAVEL.

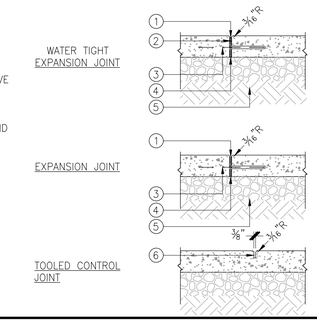

2 EXPANSION JOINTS / SCORE JOINTS

NOT TO SCALE

1. PROCESS AND PREPARE SUBGRADE PER GEOTECHNICAL RECOMMENDATIONS.
2. CONCRETE PAVING, SEE DETAIL 1, THIS SHEET
3. THICKENED EDGE WHERE SHOWN ON PLAN
4. #4 REBAR 24" O.C. (EXTEND INTO SLAB MIN 12" BEND AND EXTEND 3" FROM BOTTOM OF CURB)
5. PLAY AREA CURB AS SHOWN ON PLAN.
6. 2-#4 REBAR TOP AND BOTTOM CONTINUOUS, 3" CLEAR FROM ALL EDGES
7. 1/2" RADIUS TYPICAL
8. ENGINEERED WOOD FIBER
9. 8 OZ./SQ YD NON WOVEN GEO-TEXTILE FABRIC.
10. CONCRETE PLAYGROUND CURB SHALL OMIT ADJACENT CONCRETE PAVEMENT AND EXTENSION OF REBAR INTO ADJACENT PAVEMENT WHERE ADJACENT TO PLANTING AREA.
11. 3/4" MAX AGGREGATE BASE COMPACTED TO 90% MIN RELATIVE COMPACTION

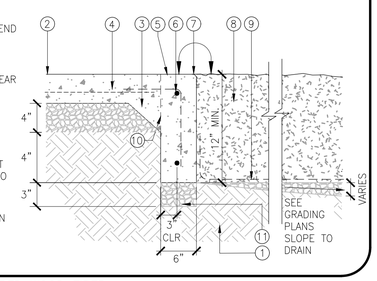

8 CONCRETE PLAYGROUND EDGE AT ENGINEERED WOOD FIBER

NOT TO SCALE

1. PORTLAND CEMENT CONCRETE, 5 SACK CRUSHED AGGREGATE 3/4" MAX @ 2500 PSI.
2. #3 REBAR CONTINUOUS
3. 1/2" RADIUS, TYPICAL
4. CLASS II AGGREGATE BASE COMPACTED @ 90% MIN RELATIVE COMPACTION
5. PROCESS AND PREPARE SUBGRADE PER GEOTECHNICAL RECOMMENDATIONS

NOTES:
A. 3/8" ASPHALT IMPREGNATED EXPANSION JOINTS SHALL BE PLACED @ 20' O.C. TRIM 1/4" BELOW FINISH SURFACE, TYPICAL.
B. CONTROL JOINTS SHALL BE PLACED @ 10' O.C., TYPICAL.

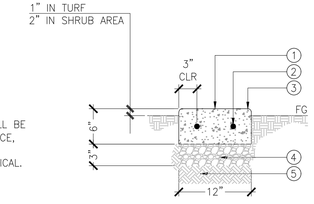

3 12" CONCRETE MOW CURB

NOT TO SCALE

1. CONCRETE CURB
2. 1" RADIUS ON BOTH SIDES
3. #4 VERTICAL REBAR @ 16" O.C.
4. (3) #4 HORIZONTAL REBAR CONTINUOUS. 3" CLEAR ON ALL SIDES.

NOTE:
A. FOOTING EXCAVATIONS SHALL BE CLEAN, UNIFORM AND UNYIELDING AT BOTTOM OF FOOTING.

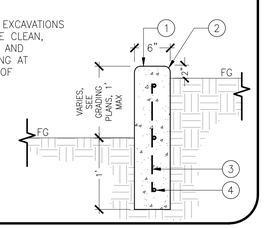

12 6" VERTICAL CURB AT FG

NOT TO SCALE

1. FREESTANDING TYPE 3' CONCRETE CURB, PER COUNTY STANDARD
2. 1" RADIUS ON BOTH SIDES
3. CONCRETE SIDEWALK
4. SHRUB PLANTING AREA WITH BARK MULCH

NOTE:
A. FOOTING EXCAVATIONS SHALL BE CLEAN, UNIFORM AND UNYIELDING AT BOTTOM OF FOOTING.

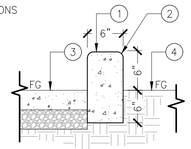

13 6" FREESTANDING CURB AT SIDEWALK

NOT TO SCALE

1. CONCRETE PAVEMENT WITH DEEPENED EDGE.
2. 3" MINIMUM CLASS II AGGREGATE BASE, COMPACTED TO 95% RELATIVE COMPACTION. SLOPE TO DRAIN.
3. THICKENED EDGE AND CONCRETE PAVING WHERE SHOWN ON PLAN.
4. #4 REBAR 24" O.C. (EXTEND INTO SLAB MIN 12" BEND AND EXTEND 3" FROM BOTTOM OF CURB)
5. PLAY AREA CURB (P.C. CONCRETE, 5 SACK 3/4" MAX CRUSHED AGGREGATE @ 2500 PSI)
6. 2-#4 REBAR TOP AND BOTTOM CONTINUOUS
7. WEAR LAYER (1/2" MIN.), FLUSH WITH CONCRETE CURB. COLOR PER PLANS. INSTALL PER MANUFACTURERS RECOMMENDATION.
8. CUSHION LAYER, VERIFY THICKNESS WITH PLAY STRUCTURE MANUFACTURER'S RECOMMENDATIONS.
9. PROCESS AND PREPARE SUBGRADE PER GEOTECHNICAL RECOMMENDATIONS.

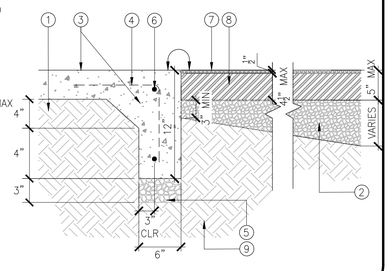

9 CONCRETE PAVEMENT WITH DEEPENED EDGE AT POUR-IN-PLACE RUBBER SURFACING

NOT TO SCALE

1. DG COURSE. GRANITECRETE - REFER TO MANUFACTURER SPECIFICATIONS
2. PLANTING AREA
3. AGGREGATE BASE. SEE MANUFACTURER SPEC.
4. PROCESS AND PREPARE SUBGRADE PER GEOTECHNICAL RECOMMENDATIONS.

NOTES:
REFER TO SPECIFICATIONS TAMPED/ROLLED EDGE AT GRANITECRETE EDGE, PER INSTALLATION SPEC.

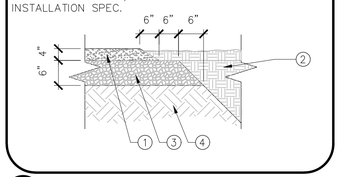

5 STABILIZED DECOMPOSED GRANITE

NOT TO SCALE

1. CLASS II AGGREGATE BASE ROCK
2. ADJACENT LANDSCAPE
3. 8 OZ. NON WOVEN GEOTEXTILE FABRIC
4. PROCESS AND PREPARE SUBGRADE PER GEOTECH RECOMMENDATIONS
5. PORTLAND CEMENT CONCRETE, 5 SACK CRUSHED AGGREGATE 3/4" @ 2500 PSI.
6. 1/2" RADIUS, TYP.
7. #3 REBAR CONTINUOUS

NOTES:
A. 3/8" ASPHALT IMPREGNATED EXPANSION JOINTS SHALL BE PLACED @ 20' O.C. TRIM 1/4" BELOW FINISH SURFACE, TYPICAL.
B. CONTROL JOINTS SHALL BE PLACED @ 10' O.C., TYPICAL.

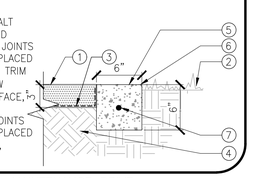

4 GRAVEL MAINTENANCE DRIVE

NOT TO SCALE

811 Know what's below. Call before you dig.

Westwood
Westwood Professional Services, Inc.
8200 STONERIDGE MALL ROAD, SUITE 330
PLEASANTON, CA 94588
T: 925.223.8340
westwoodps.com

NO.	DESCRIPTION	DATE	BY	APP. DATE	APP.

ANTELOPE, CALIFORNIA

NHRPD SIERRA CREEK PARK
7781 WATT AVE
CONSTRUCTION DETAILS

DATE: 08/31/26
DRAFTER: TH, AL, CY
DESIGNER: KF, TH
CHECKED: KF, JG
PROJECT NO. 41541

LICENSED LANDSCAPE ARCHITECT — KAREN N. FOLSOM — STATE OF CALIFORNIA
Signature
03/31/27
Renewal Date
08/31/26
Date

L6.0

Last Saved by: MALoucenco
Plot Date: Wednesday, August 12, 2026 10:39 AM
Drawing: N:_CIVil\Pleasanton\41541 NHRPD Sierra Creek Park\Landscape\ConstPlans\41541-DT

1. P.I.P. COLORED CONCRETE WALL. CONCRETE TO BE A SMOOTH CONSISTENT SURFACE FREE OF AIR POCKETS AND BLEMISHES ON ALL VISIBLE FACES. FINISH: TOPCAST 5 SURFACE RETARDER. REFER TO SPECIFICATIONS.
2. STAGE. SEE CONCRETE PAVING DETAIL 1, SHEET L6.0.
3. DOWEL WITH SLEEVE – 3/8" DOWEL
4. #4 REBAR VERT. ALT BENDS @ 12" O.C. TYP.
5. (2) #4 HOR. REBAR @ 16" O.C. TYP.
6. 3" CLASS II AGGREGATE, COMPACTED PER GEOTECHNICAL REPORT RECOMMENDATIONS
7. PROCESS AND PREPARE SUBGRADE PER GEOTECHNICAL RECOMMENDATIONS.
8. CONCRETE RAMP TO STAGE
9. EXPANSION JOINT. SEE DETAIL 2 SHEET L6.0
10. FINISH GRADE. ADJACENT LANDSCAPE
11. CONCRETE. SEE DETAIL 1 SHEET L6.0.

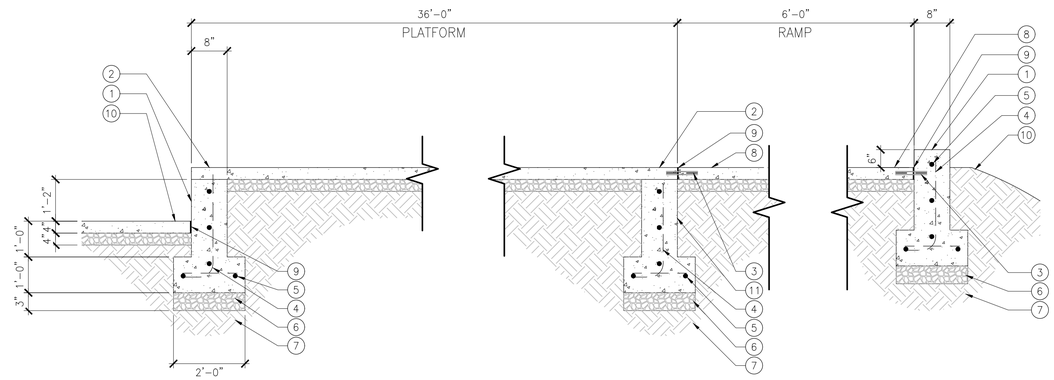

3 AMPHITHEATER STAGE & RETAINING WALLS

1/2"=1'-0"

1. CONCRETE WALL
2. 6" CURB w/ #3 CONTINUOUS HORIZONTAL REBAR
3. 15" CULVERT PIPE
4. AGGREGATE BASE
5. PROCESS AND PREPARE SUBGRADE PER GEOTECHNICAL RECOMMENDATIONS.
6. #4 EA WAY, TYP HORIZONTAL REBAR @16" O.C.
7. #3 REBAR HORIZONTAL @ 16" O.C. EA WAY TYP.
8. EXPANSION JOINT
9. FINISH GRADE OF SWALE
10. FINISH GRADE OF WALKWAY
11. #4 REBAR VERT. @ 16" O.C. W/ 8" HOOK AT BOTTOM WHERE TOP OF CURB TO BOTTOM OF FOOTING EXCEEDS 1'-6"

1. REFER TO CIVIL GRADING PLAN FOR MORE INFORMATION.
2. CONTRACTOR TO FIELD VERIFY EXISTING CONDITIONS AND SUBMIT SHOP DRAWINGS PRIOR TO INSTALLATION.

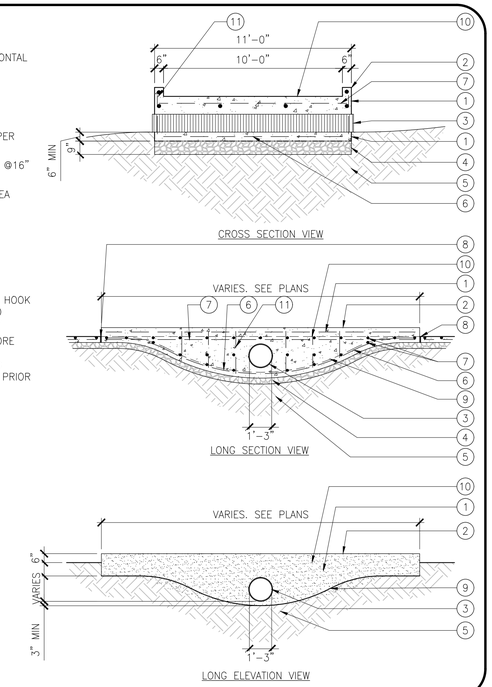

1 CONCRETE CULVERT

NOT TO SCALE

1. CONCRETE P.I.P. WALL COLOR AND FINISH SEE SITE FEATURES SCHEDULE
2. 3/4" DEEP BY 3" WIDE SKATE DETERRENT GROOVES, EVENLY SPACED
3. CONCRETE PAVEMENT
4. CONCRETE FOOTING
5. #4 HOR. REBAR @ 8" O.C. TYP.
6. 3" CLASS II AGGREGATE, COMPACTED TO 90% MIN RELATIVE COMPACTION
7. PROCESS AND PREPARE SUBGRADE COMPACTED PER GEOTECH REPORT
8. EXPANSION JOINT
9. #4 REBAR VERT. ALT BENDS @ 16" O.C. TYP.
10. ADJACENT PLANTING AREA

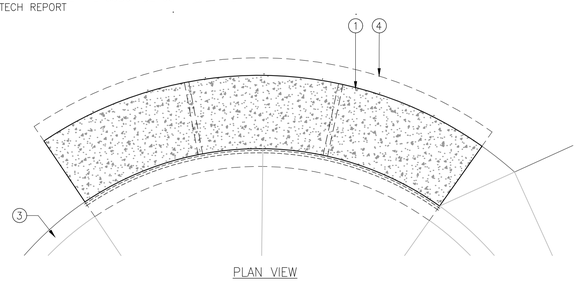

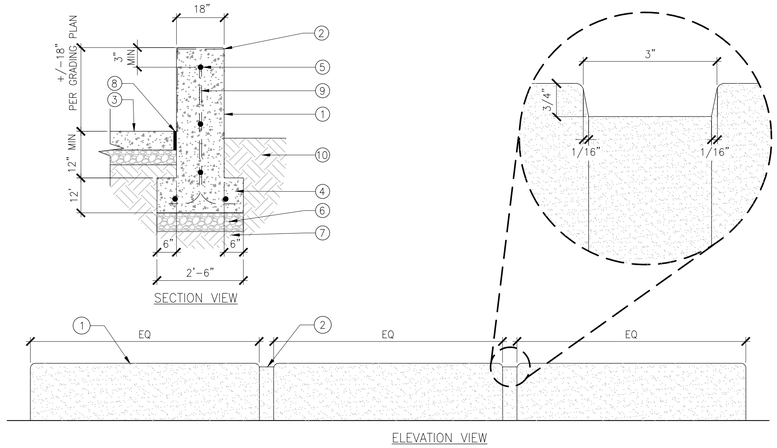

4 CURVED CONCRETE SEATWALL

1/2"=1'-0"

1. POUR-IN-PLACE RUBBER SURFACING ON EMBBANKMENT, SEE DETAIL 9, SHEET L6.0 (SEE SITE FINISHES SCHEDULE FOR ADDITIONAL INFORMATION).
2. 6" WIDE FOOTING
3. PROCESS AND PREPARE SUBGRADE PER GEOTECHNICAL REPORT RECOMENDATIONS
4. POUR-IN-PLACE RUBBER SURFACING ON EMBBANKMENT, SEE DETAIL 9, SHEET L6.0 (SEE SITE FINISHES SCHEDULE FOR ADDITIONAL INFORMATION).
5. CONCRETE SLURRY W/ #3 REBAR @ 16" O.C. EACH WAY, AS SHOWN
6. EXCAVATIONS SHALL BE CLEAN, UNIFORM AND UNYIELDING AT BOTTOM OF FOUNDATION

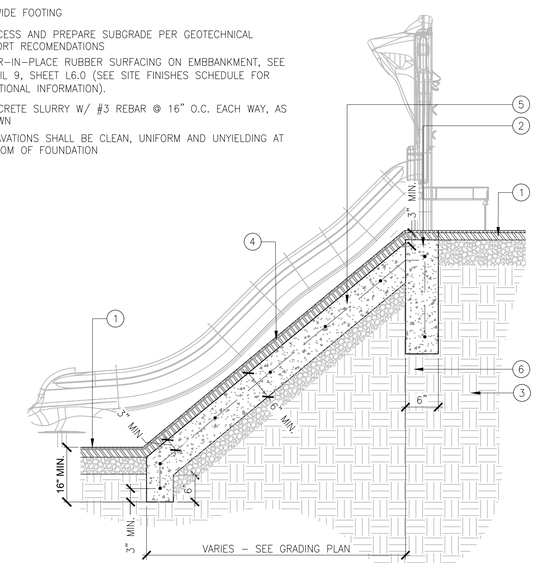

2 SLIDE SECTION

NOT TO SCALE

1. 1-1/2" STD. PIPE (1.9" O.D.) STEEL HANDRAIL (HORIZONTAL AND VERTICAL) FILET WELD AND GRIND SMOOTH ALL CONNECTIONS AND BENDS, EASE ENDS. SMOOTH GALVANIZED FINISH
2. 2" DIA. STEEL POSTS WITH 3" SQUARE PLATE. EMBED POSTS WITH NON-SHRINK GROUT INTO EXISTING POST HOLES FOR STABILITY.
3. CONCRETE RAMP
4. 6" CURB
5. CLASS 2 AGGREGATE BASE AT 95% RELATIVE COMPACTION
6. COMPACTED SUBGRADE
7. PLANTING AREA
8. EXPANSION JOINT

NOTES:
CONTRACTOR TO PROVIDE SHOP DRAWINGS PRIOR TO MANUFACTURER AND INSTALLATION. FILED VERIFY CONDITIONS, AND PROVIDE ELEVATIONS OF HANDRAIL WITH EQUALLY SPACED POSTS NO MORE THAN 48" O.C.

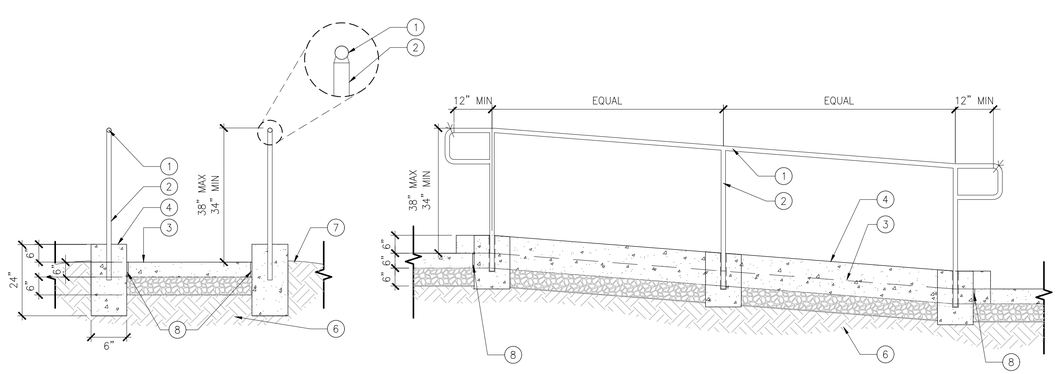

5 HANDRAIL & CURB AT RAMP

1/2"=1'-0"

Know what's **below.**
Call before you dig.

Westwood
Westwood Professional Services, Inc.
6200 STONERIDGE MALL ROAD, SUITE 330
PLEASANTON, CA 94588
T: 925.223.8340
westwoodps.com

NO.	DESCRIPTION	DATE	BY	APP. DATE	APP.

ANTELOPE, CALIFORNIA

NHRPD SIERRA CREEK PARK

7781 WATT AVE CONSTRUCTION DETAILS

DATE: 08/31/26
DRAFTER: TH, AL, CY
DESIGNER: KF, TH
CHECKED: KF, JG

PROJECT NO. 41541

LICENSED LANDSCAPE ARCHITECT
KARIN N. FOLSOM
Signature
03/31/27
Renewal Date
08/31/26
Date
STATE OF CALIFORNIA

L6.1

Last Saved by: MALoucinco
Plot Date/Time: 8/26/2026 1:27 PM
Drawing: N:_CIDE\Pleasanton\41541 NHRPD Sierra Creek Park\Landscape\ConstPlans\41541-DT

1. CUSTOM CONCRETE PARK ENTRY SIGN. SEE SITE FEATURES SCHEDULE.
2. 2 1/2" CAST IN LETTERING–PAINTED (PPG 1138–7) MIDNIGHT CLOVER
3. 5 1/4" CAST IN LETTERING–PAINTED (PPG 1138–7) MIDNIGHT CLOVER
4. SIGN FACE INSET 1" FROM SIGN PANEL
5. CONCRETE FOOTING, 3,500 PSI MIN. MIN. FOOTING DIMENSIONS FOR REFERENCE ONLY. INSTALL PER MANUFACTURER'S RECOMMENDATIONS.
6. MOUNTING HOLES (GROUT POCKETS), MIN 3" IN DIAMETER.
7. ANCHORE PIPE, INSTALL PER MANUFACTURER'S RECOMMENDATIONS.

NOTES:
1. TEXTURE–SMOOTH
2. COLOR– ODC SAN DIEGO BUFF
3. SEALER– STANDARD ACRYLIC
4. CONTRACTOR TO PROVIDE SHOP DRAWING FOR APPROVAL PRIOR TO PROCUREMENT.
5. CONTRACTOR TO INSTALL SIGN PER MANUFACTURER'S RECOMMENDATIONS.

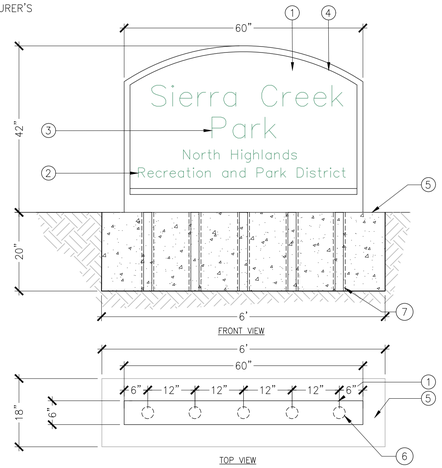

6 PARK SIGN

NOT TO SCALE

1. CONCRETE PAD, SEE DETAIL 1 ON SHEET L6.0
2. DRINKING FOUNTAIN, SEE MODEL ON SITE FEATURES SCHEDULE
3. WHEELCHAIR ACCESSIBLE ARM, 17–19" DEPTH PER CBC TITLE 24 11B
4. CLEAR FLOOR SPACE OF 30" X 48" TO COMPLY WITH CBC TITLE 24 11B
5. PET BOWL
6. 3/4" THD. GALVANIZED SUPPLY LINE
7. CONCRETE VALVE BOX WITH METAL LOCKING LID.
8. BRONZE BALL VALVE (LINE SIZE)
9. DRYWELL
10. PVC SEWER LINE AND FITTINGS
11. PVC MIP ADAPTER
12. WATER SUPPLY LINE
13. NON WOVEN GEO–TEXTILE FABRIC – 8 OZ./SQUARE YARD. OVERLAP MIN. 1'

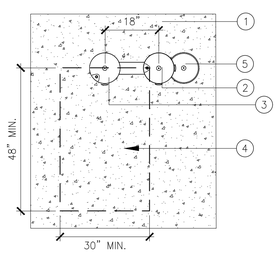

CLEAR FLOOR SPACE

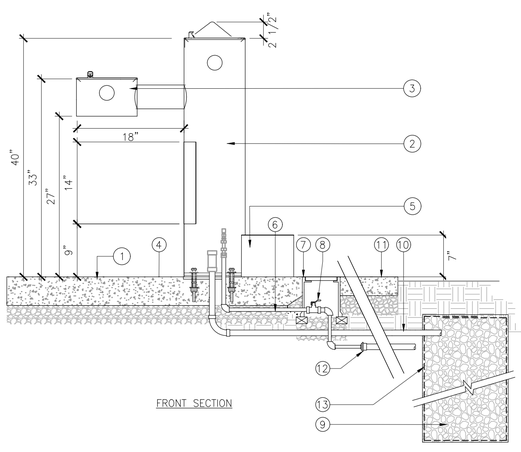

FRONT SECTION

7 MDF MODEL# SMFA 440 – ADA DRINKING FOUNTAIN WITH PET BOWL

NOT TO SCALE

1. 1–1/2" SQ. TOP RAIL
2. 3/4" TUBULAR STEEL PICKETS AT 3⅞" O.C., TYP.
3. 2" SQ. POST AT 8' O.C., W/CAP, TYP.
4. 1–1/2" SQ. MIDDLE RAIL
5. 1–1/2" SQ. BOTTOM RAIL
6. FINISH GRADE (SOIL)
7. CONCRETE FOOTING AT ALL POSTS. 3000 PSI CONCRETE MIN. FOOTING DIMENSIONS FOR REFERENCE ONLY. INSTALL PER MANUFACTURER'S RECOMMENDATIONS.
8. UNDISTURBED EARTH
9. 18" WIDE CONCRETE BAND. REFER TO DETAIL 3, SHEET L6.0. (SIM)

NOTES:
A. ALL FENCE PARTS TO BE TUBULAR STEEL.
B. GRIND SMOOTH ALL WELDS.
C. PRIME AND APPLY 2 COATS OF BLACK PAINT.
D. ALL PAINT AND PRIMER SHALL BE APPLIED TO CLEAN SURFACES IN 5 MIL. COATS.
E. FIELD VERIFY ALL DIMENSIONS PRIOR TO CONSTRUCTION.

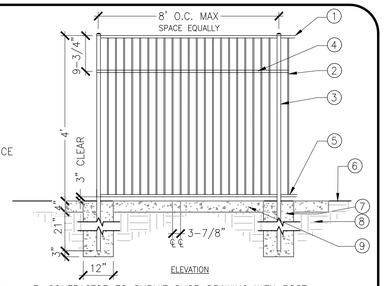

F. CONTRACTOR TO SUBMIT SHOP DRAWING WITH POST SPACING SHOWN IN ELEVATION.

4 4' TUBULAR STEEL FENCE

NOT TO SCALE

1. PRECAST CONCRETE CAP. COLOR TO MATCH PARK SIGNAGE
2. 3/8" MORTAR JOINT COLOR TO MATCH PILASTER CAP.
3. #4 HOR. REBAR CLOSED TIE @ 12" O.C. TYP.
4. (4) #4 REBAR VERT. ALT BENDS
5. POURED–IN–PLACE CONCRETE WITH TOPCAST 05 FINISH, COLOR TO MATCH SIGNAGE
6. CONCRETE BAND, REFER TO DETAIL 3/L6.0
7. FINISHED GRADE
8. CONCRETE FOOTING
9. 3" CLASS II AGGREGATE, COMPACTED TO 95% RELATIVE COMPACTION PER GEOTECH REPORT
10. SUBGRADE COMPACTED TO 95% RELATIVE DENSITY. PER GEOTECH REPORT
11. 4' TUBULAR STEEL FENCE, REFER TO DETAIL 4, SHEET L6.2
12. FENCE POST

NOTE:
A. CONTRACTOR TO PROVIDE SHOP DRAWINGS.

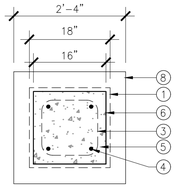

PLAN VIEW

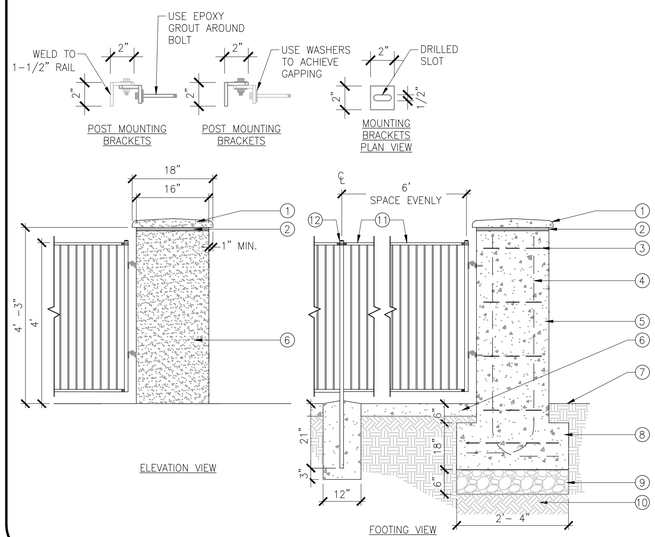

5 PILASTER

NOT TO SCALE

1. 1–1/2" SQ. TOP RAIL
2. 3/4" TUBULAR STEEL PICKETS AT 3⅞" O.C., TYP.
3. 2" SQ. POST, W/CAP, TYP.
4. 1–1/2" SQ. MIDDLE RAIL
5. 1–1/2" SQ. BOTTOM RAIL
6. FINISH GRADE
7. CONCRETE FOOTING AT ALL POSTS. 3000 PSI CONCRETE MIN. FOOTING DIMENSIONS FOR REFERENCE ONLY. INSTALL PER MANUFACTURER'S RECOMMENDATIONS.
8. UNDISTURBED EARTH
9. 12" WIDE CONCRETE BAND. REFER TO DETAIL 3/L6.0.

NOTES:
A. ALL FENCE PARTS TO BE TUBULAR STEEL.
B. GRIND SMOOTH ALL WELDS.
C. PRIME AND APPLY 2 COATS OF BLACK PAINT.
D. ALL PAINT AND PRIMER SHALL BE APPLIED TO CLEAN SURFACES IN 5 MIL. COATS.
E. FIELD VERIFY ALL DIMENSIONS PRIOR TO CONSTRUCTION.
F. CONTRACTOR TO SUBMIT SHOP DRAWING WITH POST SPACING SHOWN IN ELEVATION.

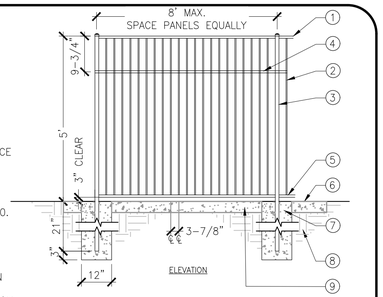

1 5' TUBULAR STEEL FENCE

NOT TO SCALE

1. FORKLATCH CANE BOLT
2. 1–1/2" SQ. GATE FRAME
3. 3/4" TUBULAR STEEL PICKETS AT 3⅞" O.C., TYP.
4. 2½" SQ. POST
5. 1–1/2" SQ. MIDDLE RAIL
6. HEAVY DUTY GATE HINGE
7. FINISH GRADE (SOIL)
8. CONCRETE FOOTING AT GATE POSTS. 3,500 PSI CONCRETE MIN. FOOTING DIMENSIONS FOR REFERENCE ONLY. INSTALL PER MANUFACTURER'S RECOMMENDATIONS.

NOTES:
1. ALL GATE PARTS TO BE TUBULAR STEEL.
2. GRIND SMOOTH ALL WELDS.
3. PRIME AND APPLY 2 COATS OF BLACK PAINT.
4. ALL PAINT AND PRIMER SHALL BE APPLIED TO CLEAN SURFACES IN 5 MIL. COATS.
5. FIELD VERIFY ALL DIMENSIONS PRIOR TO CONSTRUCTION.
6. CONTRACTOR TO PROVIDE PRODUCT DATA AND SHOP DRAWINGS.

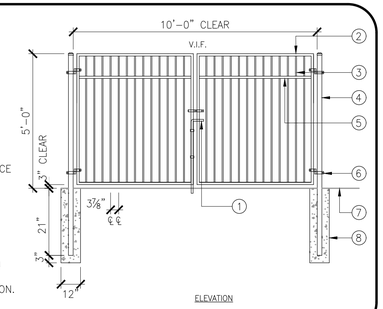

2 DOUBLE SWING GATE – 5' TUBULAR STEEL

NOT TO SCALE

1. 4" SQ GATE POST, W/CAP, TYP
2. 5/8" TUBULAR STEEL PICKETS AT 3 7/8" O.C., TYP
3. 2" SQ GATE FRAME, TYP
4. 1" SQ MID RAIL
5. EXPANDED METAL MESH. 24" WIDE FROM POST MIN.
6. 5' HIGH TUBULAR STEEL FENCE, SEE DETAIL 1
7. EXTERIOR PANIC BAR ON INSIDE OF GATE, WITH KEYED LOCKING HAND LEVER ON OUTSIDE
8. HEAVY DUTY SELF CLOSING HINGES
9. FINISH GRADE
10. CONCRETE FOOTING AT ALL POSTS. 3000 PSI CONCRETE MIN FOOTING DIMENSIONS FOR REFERENCE ONLY. INSTALL PER MANUFACTURER'S RECOMMENDATIONS.
11. PROCESS AND PREPARE SUBGRADE PER GEOTECHNICAL RECOMMENDATIONS.
12. GRID OPENINGS ATTACHED WITH WELDED CONNECTION TO TOP RAIL, BOTTOM, AND POST / PICKETS AS NEEDED. PAINT TO MATCH FENCE
13. 10" HIGH STEEL KICK PLATE ON BOTH SIDES OF GATE. WELD AND GRIND SMOOTH

NOTES:
1. ALL GATE PARTS TO BE TUBULAR STEEL.
2. GRIND SMOOTH ALL WELDS.
3. PRIME AND APPLY 2 COATS OF BLACK PAINT.
4. ALL PAINT AND PRIMER SHALL BE APPLIED TO CLEAN SURFACES IN 5 MIL. COATS.
5. SEE PLAN FOR POSITION OF GATE HINGES.
6. CONTRACTOR TO PROVIDE FENCE AND GATE SHOP DRAWINGS AS A SUBMITTAL TO LANDSCAPE ARCHITECT PRIOR TO ORDERING MATERIALS.
7. CONTRACTOR TO SUBMIT SAMPLES, SHOP DRAWINGS, AND MANUFACTURERS DATA TO LANDSCAPE ARCHITECT BEFORE ORDERING.
8. FIELD VERIFY ALL DIMENSIONS PRIOR TO CONSTRUCTION.

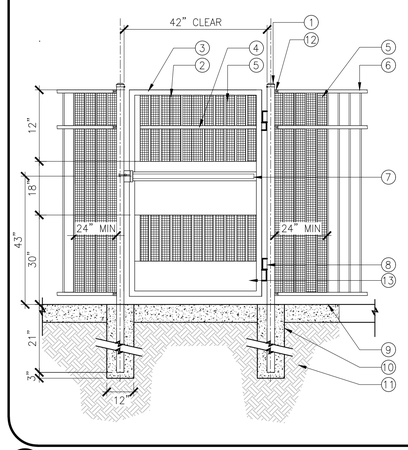

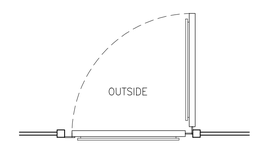

GATE SWING DIRECTION

3 GATE PEDESTRIAN – 5' TUBLAR STEEL

NOT TO SCALE

811 Know what's below. Call before you dig.

Westwood
Westwood Professional Services, Inc.
6200 STONERIDGE MALL ROAD, SUITE 330
PLEASANTON, CA 94588
T: 925.223.8340

NO.	DESCRIPTION	DATE	BY	APP. DATE	APP.

ANTELOPE, CALIFORNIA

NHRPD SIERRA CREEK PARK

7781 WATT AVE CONSTRUCTION DETAILS

DATE: 08/31/26
DRAFTER: TH, AL, CY
DESIGNER: KF, TH
CHECKED: KF, JG
PROJECT NO. 41541

LICENSED LANDSCAPE ARCHITECT — KAREN N. FOLSOM #4793 — Signature 03/31/27 Renewal Date — 08/31/26 Date — STATE OF CALIFORNIA

L6.2

Last Saved by: MALoureiro
Plot Date/Time: 8/26/2026 10:10 AM
Drawing: N:_ODE\Pleasanton\41541 NHRPD Sierra Creek Park\Landscape\Const\Plans\41541-DT

1. OUTDOOR CREATIONS ADA PICNIC TABLE, PER SITE FURNISHING LEGEND
2. ADA WHEELCHAIR SPACE
3. COMPACTED SUBGRADE
4. CONCRETE FLATWORK
5. INTEGRALLY CAST ANTI-SKATE DETERRENTS

NOTES:
A. FINISH: SMOOTH; COLOR PER SITE FEATURE SCHEDULE. SEALER: STANDARD ACRYLIC.
B. INSTALL PER MANUFACTURER'S RECOMMENDATIONS.

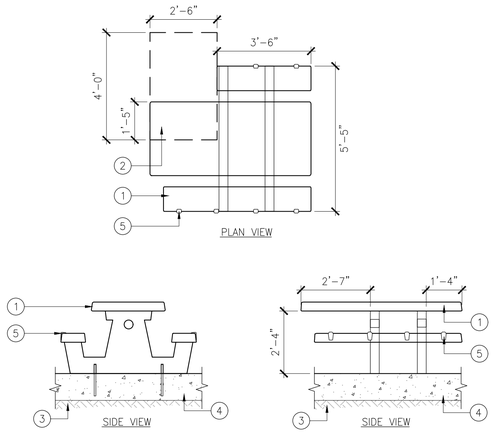

6 PICNIC TABLE –ADA MODEL

3/8"=1'-0"

1. BEARSAVER RECEPTACLE–TRASH OR RECYCLING
2. 30" MIN X 30" MIN CONCRETE PAD – REFER TO DETAIL 1, SHEET L6.0
3. ¾" J BOLT SUNK IN CONCRETE PROTRUDES 1.25"
4. AGGREGATE BASE
5. COMPACTED SUBGRADE PER GEOTECH REPORT
6. HANDS–FREE FOOT PEDAL
7. BACK OF TRASH SHALL BE LOCATED 6" OFF OF PAVEMENT EDGE.

NOTES:
A. INSTALL PER MANUFACTURER'S RECOMMENDATIONS
B. ONE TRASH AND ONE RECYCLING BIN PER SITE FEATURES PLAN

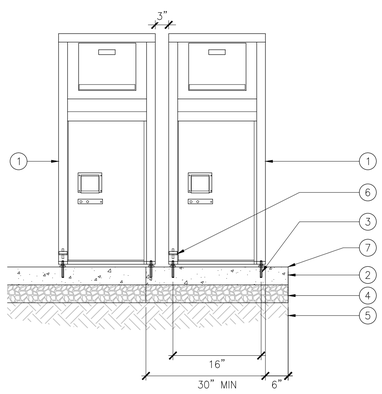

7 TRASH CAN AND RECYCLING BIN

NOT TO SCALE

1. 2.375" O.D. STRUCTURAL GRADE FRAME
2. TENSION BAR
3. TENSION CLIP
4. DOME CAP – SIZE TO POST
5. MASTER HALCO ROUND POST HINGE – SIZE TO POST (OR EQUAL)
6. 2.875" O.D. STRUCTURAL GRADE CORNER/END/PULL POSTS
7. CONTINUOUS CONCRETE CURB OR CONCRETE FLATWORK. SEE SITE FEATURES PLAN, SHEETS L3.0–3.5. SEE DETAILS 1–6, SHEET L7.1.
8. CONCRETE FOOTING PER STRUCTURAL ENGINEER (DEFERRED SUBMITTAL)
9. COMPACTED SUBGRADE
10. MASTER–HALCO DOUBLE GATE LATCH (OR EQUAL)
11. 2"X2" 9 GA. HOT DIPPED GALVANIZED CHAIN LINK FABRIC MESH (BLACK VINYL COATED). KNUCKLED TOP AND BOTTOM. INSTALL ON FIELD SIDE OF POSTS.

NOTES:
1. INSTALL PER MANUFACTURER'S RECOMMENDATIONS.
2. GATE TO TIE INTO AND MATCH EXISTING FENCING ON SITE. ANY DISCREPANCIES BETWEEN THESE DETAILS AND ACTUAL FENCING TO BE BROUGHT TO THE ATTENTION OF THE LANDSCAPE ARCHITECT BEFORE COMMENCING WORK.
3. ALL POSTS, RAILS, AND HARDWARE TO BE HOT DIPPED GALVANIZED MATERIAL.
4. DAMAGE TO EXISTING FENCING DURING CONSTRUCTION SHALL BE REPAIRED OR REPLACED BY CONTRACTOR.
5. MINIMUM FOOTING SIZE SHOWN.
6. ALL FENCING AND GATES AROUND SOFTBALL FIELD TO BE BLACK VINYL COATED
7. PROVIDE 24" CLEAR ON LATCH SIDE OF GATE

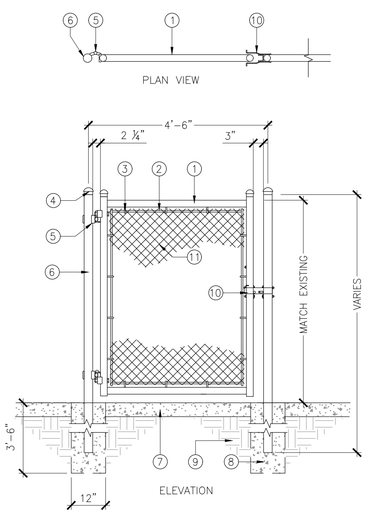

8 CHAIN LINK 4' WIDE SERVICE GATE

NOT TO SCALE

1. ROUND PICNIC TABLE, PER SITE FURNISHING LEGEND
2. PROCESS AND PREPARE SUBGRADE PER GEOTECH RECOMMENDATIONS
3. CONCRETE FLATWORK. SEE DETAIL 1, SHEET L6.0
4. THREADED COIL INSERT AND ROD PROVIDED WITH TABLE FOR MECHANICAL ATTACHMENT INTO 3" DIA. GROUT PACKET ON SIDE BY OTHERS

NOTES:
A. FINISH: SMOOTH; COLOR PER SITE FEATURE SCHEDULE. SEALER: STANDARD ACRYLIC.
B. INSTALL PER MANUFACTURER'S RECOMMENDATIONS.
C. TABLE MUST BE MECHANICALLY ATTACHED.

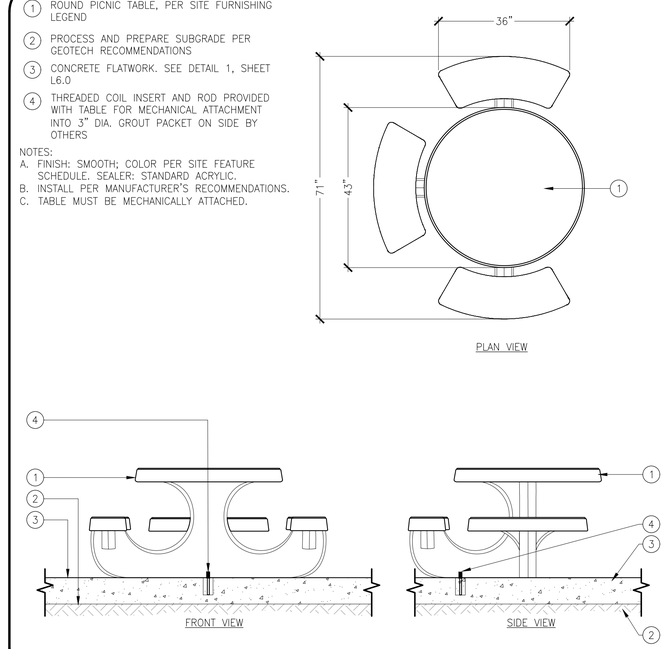

4 ROUND PICNIC TABLE

NOT TO SCALE

1. OUTDOOR CREATIONS PICNIC TABLE, PER SITE FURNISHING LEGEND
2. COMPACTED SUBGRADE
3. CONCRETE FLATWORK.
4. INTEGRALLY CAST ANTI–SKATE DETERRENTS

NOTE:
A. FINISH: SMOOTH; COLOR PER SITE FEATURE SCHEDULE. SEALER: STANDARD ACRYLIC.
B. INSTALL PER MANUFACTURER'S RECOMMENDATIONS.

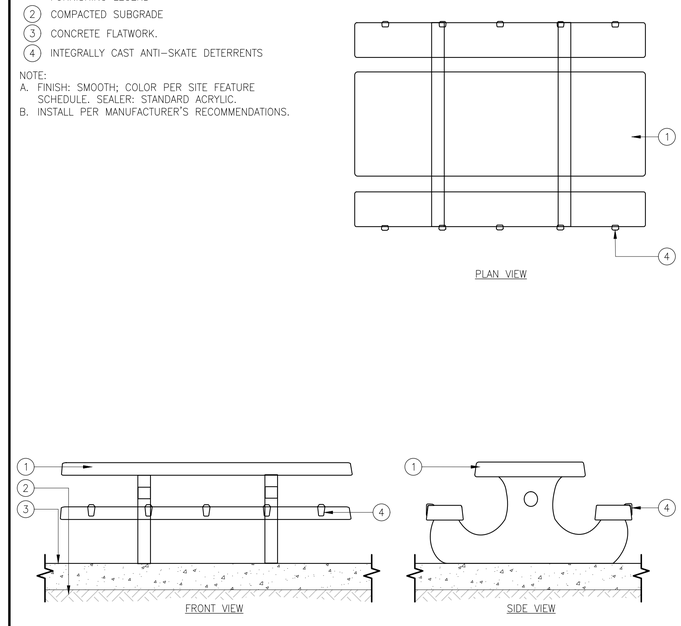

5 PICNIC TABLE –STANDARD

NOT TO SCALE

1. BACKED BENCH TYPE PER SITE FEATURE SCHEDULE
2. PROCESS AND PREPARE SUBGRADE PER GEOTECHNICAL RECOMMENDATIONS
3. CONCRETE FLATWORK SEE DETAIL 1, SHEET L6.0
4. TREADED INSERTS IN LEGS FOR MOUNTNG DOWELS
5. BACK OF BENCH TO BE LOCATED 6" OFF OF PAVEMENT EDGE.

NOTE:
A. INSTALL PER MANUFACTURER'S RECOMMENDATIONS.

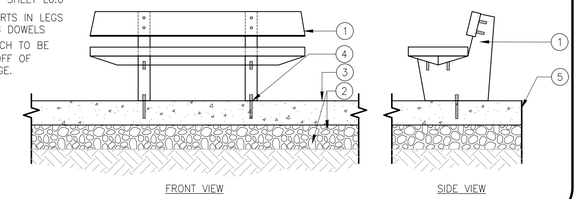

1 BACKED BENCH AT CONCRETE PAVING

NOT TO SCALE

1. BACKLESS BENCH TYPE PER SITE FEATURE SCHEDULE
2. PREPARE AND PROCESS SUBGRADE PER GEOTECHNICAL RECOMMENDATIONS
3. CONCRETE FLATWORK SEE DETAIL 1, SHEET L6.0
4. THREADED INSERTS IN LEGS FOR MOUNTING DOWELS
5. BACK OF BENCH TO BE LOCATED 6" OFF OF PAVEMENT EDGE

NOTE:
A. INSTALL PER MANUFACTURER'S RECOMMENDATIONS.

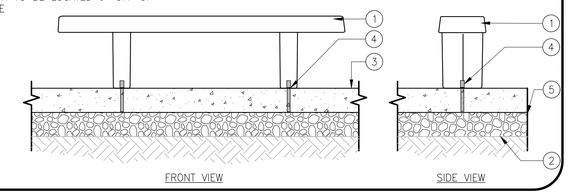

2 BACKLESS BENCH

NOT TO SCALE

1. GRILL TYPE PER SITE FURNISHING LEGEND
2. CONCRETE FLATWORK PER DETAIL 1/L6.0
3. FINISHED GRADE
4. CONCRETE FOOTING
5. NATIVE SOIL
6. COMPACTED BASE ROCK

NOTE:
B. DETAIL FOR INFORMATIONAL PURPOSES ONLY, INSTALL PER MANUFACTURER'S RECOMMENDATIONS.

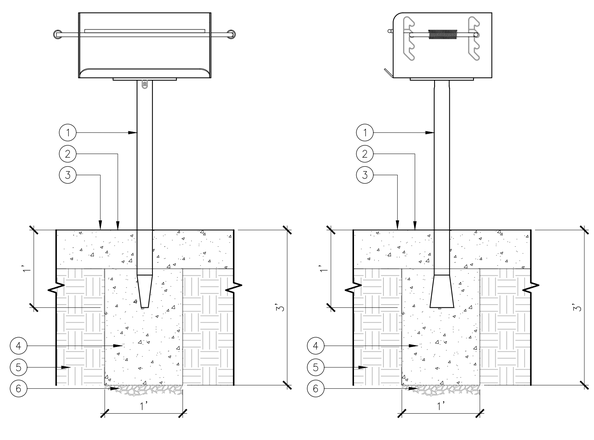

3 BBQ GRILL

NOT TO SCALE

Know what's below. Call before you dig.

Westwood
Westwood Professional Services, Inc.
6200 STONERIDGE MALL ROAD, SUITE 330
PLEASANTON, CA 94588
T: 925.223.8340
westwoodps.com

NO.	DESCRIPTION	DATE	BY	APP. DATE	APP.

ANTELOPE, CALIFORNIA

NHRPD SIERRA CREEK PARK

7781 WATT AVE
CONSTRUCTION DETAILS

DATE: 08/31/26
DRAFTER: TH, AL, CY
DESIGNER: KF, TH
CHECKED: KF, JG
PROJECT NO. 41541

LICENSED LANDSCAPE ARCHITECT
KARIN N. FOLSOM
Signature
03/31/27
Renewal Date
08/31/26
Date
STATE OF CALIFORNIA

L6.3

Last Saved by: MALourenco
Plot Scale: 1:1 Plot Date: 8/31/2026 9:16 AM
Drawing: N:_CADE\Pleasanton\41541 NRHPD Sierra Creek Park\Landscape\ConstPlans\41541-DT

1. 42"x24" ALUMINUM SIGN WITH WEATHER, FADE, AND ABRASION RESISTANT UV INK ON A WHITE BACKGROUND
2. 1 1/2" RADIUS AT CORNERS, TYP.
3. PROPOSITION 68 LOGO MIN. OF 24" TALL
4. PARK NAME WHERE NOTED
5. PROJECT FUNDING ACKNOWLEDGEMENT WHERE NOTED
6. CURRENT OFFICIAL NAMES WHERE NOTED.
7. 2"x2"x3/16" GALVANIZED SQUARE STEEL TUBE
8. CONCRETE FOOTING, AS DIMENSIONED
9. 1/2" RADIUS, TYP.
10. PLANTING AREA

NOTES:
1. PRIOR TO PREPARATION OF SHOP DRAWINGS AND FABRICATION, SIGNAGE CONTENT TO BE CONFIRMED BY CONTRACTOR WITH DISTRICT.
2. CONTRACTOR TO SUBSEQUENTLY PROVIDE DETAILED SHOP DRAWINGS FOR DISTRICT APPROVAL.
3. CONTRACTOR TO PROVIDE STRUCTURAL ENGINEERING FOR FOOTING AND COORDINATE PERMITTING.

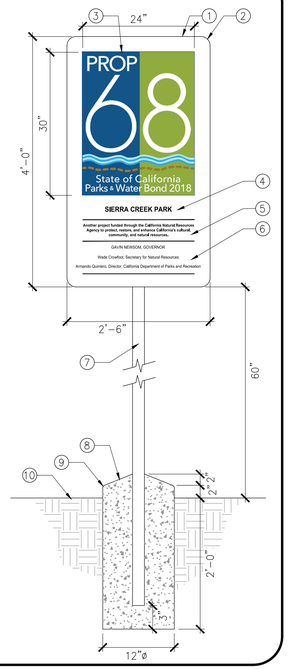

7 PROPOSITION 68 SIGN

NOT TO SCALE

1. ALUMINUM PET WASTE SIGN.
2. LOCK LOCATION. PROVIDE SEPARATE PADLOCK WITH KEY.
3. BIODEGRADABLE BAGS DISPENSER.
4. PET WASTE STATION RECEPTACLE
5. 2" DIAMETER GALV STEEL SIGN POST.
6. CROWN TO DRAIN
7. FINISH GRADE
8. CONCRETE FOOTING PER MANUFACTURER'S RECOMMENDATIONS
9. EXISTING SUBGRADE
10. CLASS II AGGREGATE, COMPACTED TO 95% RELATIVE COMPACTION

NOTES:
A. MODEL AND LOCATION PER SITE FEATURES AND FINISHES PLAN.
B. DETAIL FOR REFERENCE ONLY INSTALL PER MANUFACTURERS RECOMMENDATIONS.
C. CONTRACTOR SHALL VERIFY ALL PRODUCT DETAILS WITH DISTRICT PRIOR TO ORDERING.

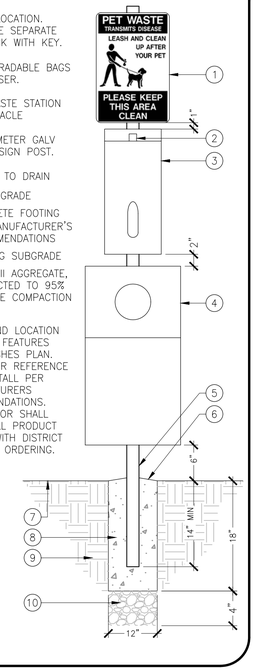

5 PET STATION

NOT TO SCALE

1. CONCRETE PAD FOR BIKE PARKING REFER TO DETAIL 1 SHEET L6.0
2. ADJACENT PATHWAY. CONCRETE FLATWORK. SEE SITE FEATURES AND FINISHES PLAN FOR MATERIAL AND LOCATION.
3. EXPANSION JOINT WHERE ADJACENT TO CONCRETE FLATWORK
4. BIKE LOCKER. SEE SITE FEATURE SCHEDULE SHEET L2.0 FOR MANUFACTURER AND MODEL. SURFACE MOUNT PER MANUFACTURER'S RECOMMENDATION.
5. BIKE RACK. SEE SITE FEATURE SCHEDULE SHEET L2.0 FOR MANUFACTURER AND MODEL. SURFACE MOUNT PER MANUFACTURER'S RECOMMENDATION.
6. PLANTING AREA

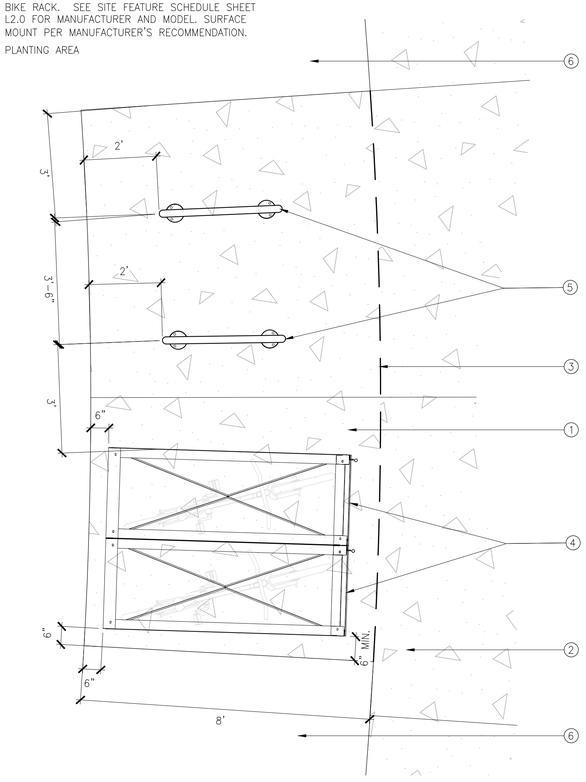

3 BIKE PARKING – BIKE RACKS & BIKE LOCKERS

NOT TO SCALE

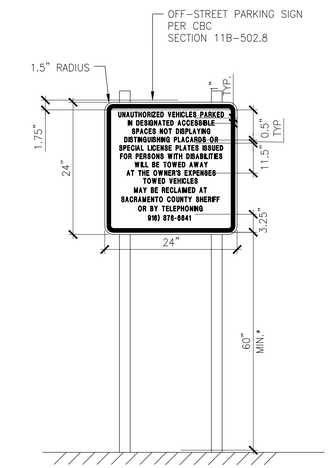

NOTES:
A. HEIGHT TO BE MEASURED TO THE EDGE OF THE LOWEST SIGN ON THE POLE.
B. SIGN TO BE PLACED AT PARKING LOT ENTRY IN PLANTING AREA.

1 PARKING LOT ENTRY SIGN

NOT TO SCALE

APPROVED BY_____
DATE_____
PROJECT_____
QUANTITY_____

INDICATE POWDER COAT COLOR:
___BLACK TEX
___NPS BROWN
___NPS DARK BROWN
___NPS MED GREY
___OTHER
___SPECIFY OTHER FINISH_____

ITEM	PART NUMBER	DESCRIPTION	MATERIAL	QTY
1	TRP101-36-45	TRADITIONAL POST FOR 36" X 1/2" PANEL	ALUMINUM	1
2	TRP101-36-45	TRADITIONAL POST FOR 36" X 1/2" PANEL	ALUMINUM	1
3	FA-3648R	36 X 48 PANEL FRAME	ALUMINUM	1

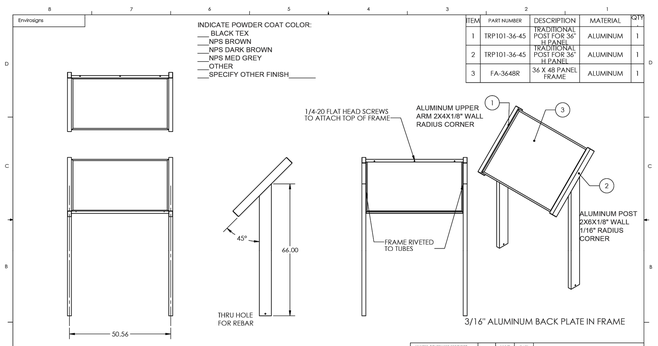

POWDERCOAT PER PO SPEC

RECOMMENDED INSTALLATION HEIGHT IS 28-32" FROM GRADE
30" FROM GRADE IS APPROX. 20" BURIAL

UNLESS OTHERWISE SPECIFIED:	NAME	DATE	
DIMENSIONS ARE IN INCHES	DRAWN	CDH	4/10/2013
TOLERANCES:	APPROVED	JOHN DOE	4/16/2013
FRACTIONAL ± 1/32	MATERIAL		TITLE:
ANGULAR: MACH ± 0°30'REF ± 0°	ALUMINUM		ALUM FRAME FOR 36 X 60 PANEL
TWO PLACE DECIMAL ±.030			
THREE PLACE DECIMAL ±.010			
PROJECTION	DWG. NO.		REV / SIZE
	EB-T3648-45		B
DO NOT SCALE DRAWING	SCALE: 1:30	WEIGHT:	SHEET 1 OF 1

PROPRIETARY AND CONFIDENTIAL
THE INFORMATION CONTAINED IN THE DRAWING IS THE SOLE PROPERTY OF EB. ANY REPRODUCTION IN PART OR AS A WHOLE WITHOUT THE WRITTEN PERMISSION OF EB IS PROHIBITED.

CONTROL DATE: 3/18/2015 4:44 PM

NOTES:
1. CONTRACTOR TO PROVIDE SHOP DRAWINGS PREPARED BY SIGN MANUFACTURER.
2. FOR REVIEW: LANDSCAPE ARCHITECT WILL PROVIDE SIGNAGE GRAPHIC UPON REQUEST.
3. SHOP DRAWINGS TO INCLUDE INSTALLATION DETAIL.

8 INTERPRETIVE SIGNAGE

NOT TO SCALE

1. WELDED STEEL CAP
2. BOLLARD – SEE SITE FURNISHINGS SCHEDULE FOR TYPE.
3. BOLLARD SLEEVE PER MANUFACTURER
4. PADLOCK – PROVIDED BY CLIENT
5. CONCRETE FLATWORK – SEE DETAIL 1/L6.0

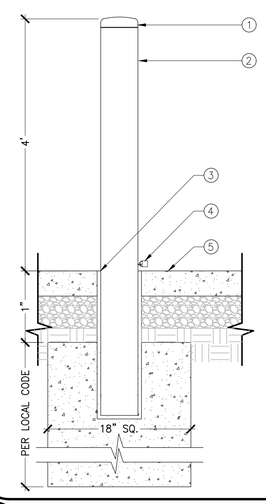

6 BOLLARD – REMOVABLE

NOT TO SCALE

1. ACCESSIBILITY PARKING STALL SIGN DETAIL 2/L6.4
2. TRAFFIC LINE BLUE 4" WIDE STRIPPING
3. 36" SQUARE PAVEMENT SYMBOL. WHITE ON BLUE BACKGROUND HANDICAP SYMBOL PER CBC SEC. 11B-502.6
4. THE WORDS "NO PARKING" SHALL BE PAINTED ON THE SURFACE WITHIN EACH ACCESS AISLE. THIS NOTICE SHALL BE PAINTED IN WHITE LETTERS NOT LESS THAN 12 INCHES HIGH AND LOCATED SO THAT IT IS VISIBLE TO TRAFFIC ENFORCEMENT OFFICIALS. (CBC 11B-502.3.3)
5. WHEELSTOP

NOTES:
A. 2% MAX. SLOPE IN ANY DIRECTION @ PARKING SPACE AND ACCESS AISLE.
B. REFER TO CIVIL GRADING PLAN FOR MORE INFORMATION

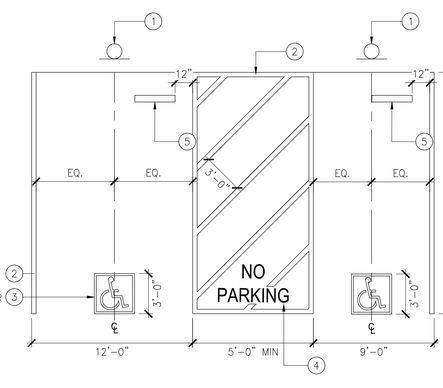

4 ACCESSIBLE PARKING STALL

3/16"=1'-0"

1. RECTANGULAR RIGID ALUMINUM SIGN. ACCESSIBLE PARKING SIGNAGE-R99C (CA)
2. VAN ACCESSIBLE SIGN
3. 2" DIAMETER GALV STEEL SIGN POST.
4. LOCK NUT (SIZE 2-1/2"X5/8")
5. CONCRETE FOOTING-CROWN TO DRAIN
6. LANDSCAPE AREA

NOTES:
A: PARKING SIGNAGE SHALL COMPLY WITH CBC SECTION 11B-502.6. INTERNATIONAL SYMBOL OF ACCESSIBILITY SHALL COMPLY WITH CBC 11B-703.7.2.1, WHITE LETTERING ON BLUE BACKGROUND.
B: SIGN SHALL BE 60" MINIMUM ABOVE FINISHED SURFACE. SIGN LOCATED WITH A CIRCULATION PATH SHALL BE A MINIMUM OF 80" ABOVE FINISH SURFACE.

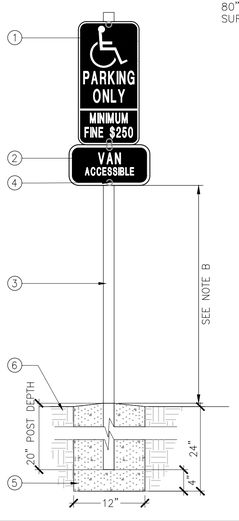

2 VAN ACCESSIBLE PARKING SIGN

NOT TO SCALE

Know what's below. Call before you dig.

Westwood
Westwood Professional Services, Inc.
6200 STONERIDGE MALL ROAD, SUITE 330
PLEASANTON, CA 94588
T: 925.223.8340

NO.	DESCRIPTION	DATE	BY	APP. DATE	APP.

ANTELOPE, CALIFORNIA

NHRPD SIERRA CREEK PARK

7781 WATT AVE CONSTRUCTION DETAILS

DATE: 08/31/26
DRAFTER: TH, AL, CY
DESIGNER: KF, TH
CHECKED: KF, JG
PROJECT NO. 41541

LICENSED LANDSCAPE ARCHITECT
SHERI N. FOLSOM
Signature
03/31/27
Renewal Date
08/31/26
Date
STATE OF CALIFORNIA

L6.4

Last Saved by: MALucero
Plot Scale: 1:1 WYSIWYG
Plot Date: 8/31/2026 9:16 AM
Drawing: N:_CDE\Pleasanton\41541 NRHPD Sierra Creek Park\Landscape\ConstPlans\41541-DT

NOTE:
1. PREFAB BUILDING TO BE PROVIDED BY DISTRICT. CONTRACTOR TO COORDINATE SCHEDULE FOR DELIVERY WITH PUBLIC RESTROOM BUILDING. CONTACT: MIKE MEGLEN, 2587 BUSINESS PARKWAY | MINDEN, NV 89423. P: 888-888-2060 EXT 149
2. CONTRACTOR SHALL PROCESS AND PREPARE SUBGRADE, AND GRADE, IN ACCORDANCE TO GEOTECH RECOMMENDATIONS AND PRE-FAB RESTROOM MANUFACTURER'S SPECIFICATIONS FOR RESTROOM BUILDING INSTALLATION BY MANUFACTURER.
3. PAVEMENTS OUTSIDE OF EXTERIOR WALLS OF RESTROOM BUILDING SHALL BE PROVIDED PER SITE FEATURES AND FINISHES PLAN ON SHEET L2.0–L2.1.
4. CONTRACTOR SHALL PROVIDE ALL UTILITIES PER SITE UTILITY PLANS AND EXTEND ALL UTILITY LINES TO WITHIN 5' OF RESTROOM BUILDING. CONTRACTOR SHALL MAKE FINAL UTILITY CONNECTIONS INCLUDING NECESSARY UTILITY BOXES.
5. CONTRACTOR SHALL COORDINATE SEWER INVERT ELEVATION WITH MANUFACTURER PRIOR TO BUILDING INSTALLATION. CONTRACTOR SHALL VERIFY AND COORDINATE LOCATION OF UTILITIES INCLUDING WATER METER SIZE, TYPE, AND LOCATION.
6. CONTRACTOR SHALL SUPPLY AND STOCKPILE REQUIRED QUANTITY OF COARSE MASON SAND WITHIN BUILDING PROXIMITY FOR USE BY MANUFACTURER FOR UTILITY TRENCH BACKFILL.

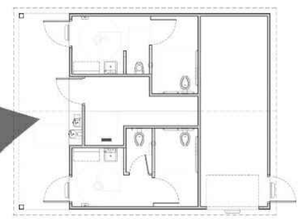

FLOOR PLAN
SCALE: NOT TO SCALE

THIS CONCEPTUAL/ PRELIMINARY DESIGN AND THE 3D RENDERING IS AN ARTISTIC INTERPRETATION OF THE DESIGN. IT IS NOT MEANT TO BE AN EXACT RENDITION OF THE FINISH PRODUCT. SOME ITEMS MAY NOT BE STANDARD AND/OR SUBJECT TO CHANGE DURING PROJECT DEVELOPMENT

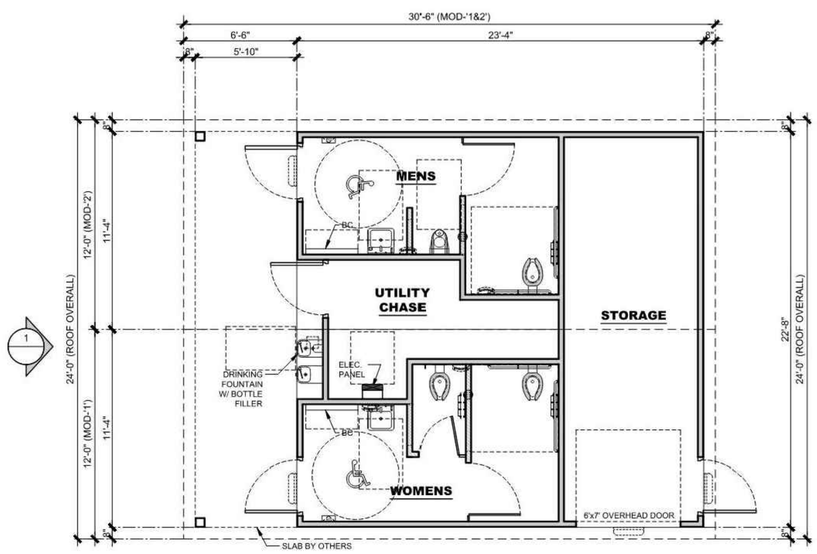

2 **FLOOR PLAN**
SCALE:3/16"=1'-0"

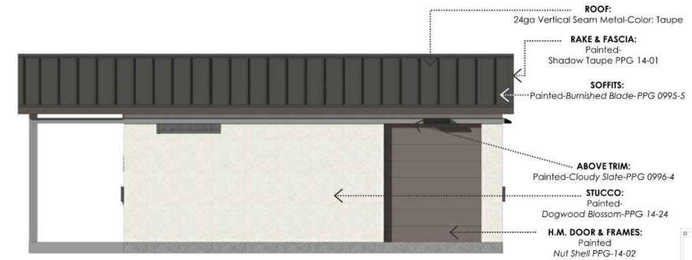

NOTES:
PITTSBURG PAINT BRAND: for all Painted Materials.
METAL SALES BRAND: for Roof Materials.

ELEVATION 2

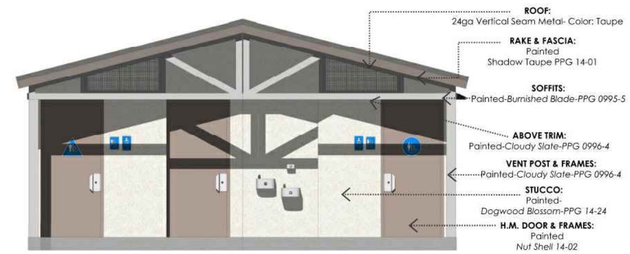

ELEVATION 1

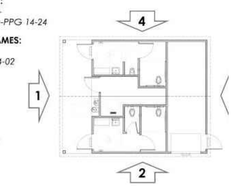

KEY PLAN
SCALE: NOT TO SCALE

THIS CONCEPTUAL/ PRELIMINARY DESIGN AND THE 3D RENDERING IS AN ARTISTIC INTERPRETATION OF THE DESIGN. IT IS NOT MEANT TO BE AN EXACT RENDITION OF THE FINISH PRODUCT. SOME ITEMS MAY NOT BE STANDARD AND/OR SUBJECT TO CHANGE DURING PROJECT DEVELOPMENT

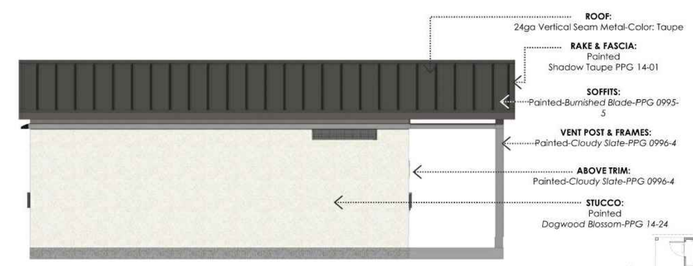

NOTES:
PITTSBURG PAINT BRAND: for all Painted Materials.
METAL SALES BRAND: for Roof Materials.

ELEVATION 4

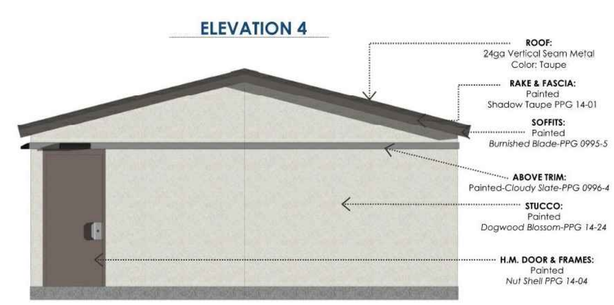

ELEVATION 3

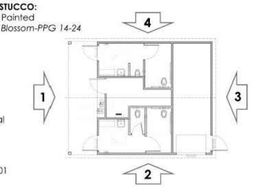

KEY PLAN
SCALE: NOT TO SCALE

THIS CONCEPTUAL/ PRELIMINARY DESIGN AND THE 3D RENDERING IS AN ARTISTIC INTERPRETATION OF THE DESIGN. IT IS NOT MEANT TO BE AN EXACT RENDITION OF THE FINISH PRODUCT. SOME ITEMS MAY NOT BE STANDARD AND/OR SUBJECT TO CHANGE DURING PROJECT DEVELOPMENT

1 RESTROOM BUILDING

NOT TO SCALE

811 Know what's below. Call before you dig.

Westwood
Westwood Professional Services, Inc.
6200 STONERIDGE MALL ROAD, SUITE 330
PLEASANTON, CA 94588
T: 925.223.8240
www.westwoodps.com

NO.	DESCRIPTION	DATE	BY	APP. DATE	APP.

ANTELOPE, CALIFORNIA

NHRPD SIERRA CREEK PARK
7781 WATT AVE
CONSTRUCTION DETAILS

DATE: 08/31/26
DRAFTER: TH, AL, CY
DESIGNER: KF, TH
CHECKED: KF, JG
PROJECT NO. 41541

LICENSED LANDSCAPE ARCHITECT
KAREN N. FOLSOM
Signature
03/31/27
Renewal Date
08/31/26
Date
STATE OF CALIFORNIA

L6.5

Last Saved by: MALucarrico
Plot Date/Time: 8/31/2026 9:16 AM
Drawing: N:_ODE\Pleasanton\41541 NRHPD Sierra Creek Park\Landscape\Const\Plans\41541-01T

1. FINISH GRADE
2. NATIVE EXCAVATED FILL COMPACTED TO ORIGINAL DENSITY
3. MAIN LINE
4. LOW VOLTAGE WIRING IN CONDUIT
5. LATERAL LINE
6. METALLIC WARNING TAPE

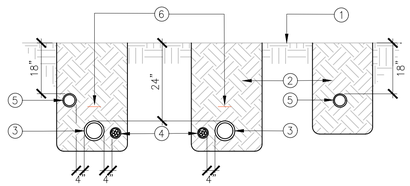

8 IRRIGATION LINE TRENCHING

NOT TO SCALE

1. FINISH GRADE
2. RECTANGULAR VALVE BOX W/LOCKING LID INSTALLED 1" BELOW GRADE
3. DBR/Y-6 CONNECTOR W/ SILICONE SPLICE
4. ID TAG ON CONTROL WIRE
5. REMOTE CONTROL VALVE (SEE LEGEND FOR TYPE AND MANUFACTURER)
6. COMMON WIRE TO OTHER VALVES
7. PVC LATERAL TO SPRINKLER
8. PVC SCH 80 MALE ADAPTER
9. PVC SCH 80 UNION (TYP. OF 2)
10. PVC SCH 80 NIPPLE
11. PVC MAINLINE
12. LANDSCAPE FABRIC
13. PVC TEE (SxSxT) (SIZE PER MAINLINE)
14. COMMON BRICK (4)
15. 3" MIN. OF PEA GRAVEL

NOTE:
A. PROVIDE MIN 18" COILED WIRE AT EACH VALVE

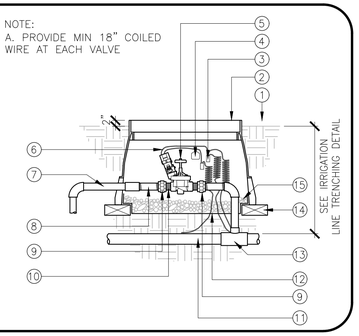

5 REMOTE CONTROL VALVE

NOT TO SCALE

1. LIGHT DUTY SS TOP ENTRY CONTROLLER ASSEMBLY
2. IRRIGATION CONTROLLER SEE IRRIGATION PLANS
3. POWER SWITCH / GFI RECEPTACLE
4. MASTER VALVE RELAY ASSEMBLY/ PUMP START RELAY
5. TERMINAL BOARD
6. 1" PVC CONDUIT FOR 120 VAC FROM POWER SUPPLY
7. PVC CONDUIT FOR CONTROL WIRES, SIZE AS REQUIRED
8. 1" PVC CONDUIT FOR FLOW SENSOR PAIGE CABLE P-7162-D
9. QUICK PAD MOUNT
10. MOUNTING PAD BASE
11. MOUNTING PAD BRACE
12. FINISH GRADE 2" BELOW TOP OF PAD
13. FILL VOIDS WITH ⅜"PEA GRAVEL

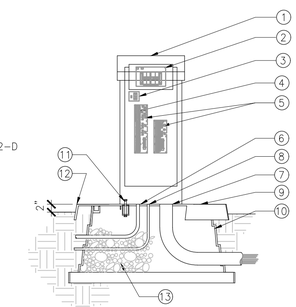

1 IRRIGATION CONTROLLER ON QUICK PAD

NOT TO SCALE

1. SAND BACKFILLED TO 95% RELATIVE COMPACTION
2. PAVING
3. LOW VOLTAGE WIRING SLEEVE
4. SCH 40 MAIN LINE SLEEVE
5. SCH 40 LATERAL LINE SLEEVE

NOTE:
A. SIZE AND LOCATION OF SLEEVES PER IRRIGATION PLANS.

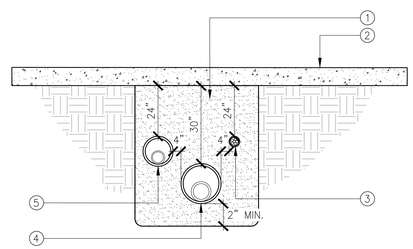

9 SLEEVE INSTALLATION

NOT TO SCALE

1. FINISH GRADE
2. POP-UP WITH ROTARY HEAD (SEE LEGEND FOR TYPE AND MANUFACTURER)
3. ¾" FUNNY PIPE TRIPLE SWING JOINT ASSEMBLY (LENGTH 12" MIN.)
4. PVC SCH 40 TEE (SxSxT) (SIZE PER LATERAL LINE)
5. PVC LATERAL LINE (SEE IRRIGATION PLAN FOR DIA.)

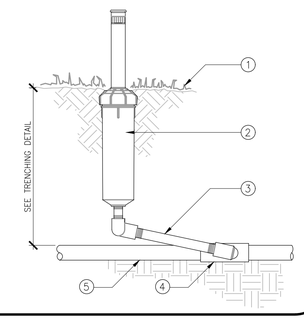

6 POP-UP ROTARY HEAD

NOT TO SCALE

1. MASTER VALVE (SEE LEGEND FOR TYPE AND MANUFACTURER)
2. CONCRETE BOX W/LOCKING LID INSTALLED 1" ABOVE GRADE
3. WIRING TO CONTROLLER
4. FINISH GRADE
5. PVC SCH 80 ELBOW SIZED PER MAINLINE DIAMETER
6. COMMON BRICK
7. LANDSCAPE FABRIC
8. DRAIN ROCK (2 CU. FT.)
9. PVC SCH 80 NIPPLE
10. PVC SCH 80 UNION
11. PVC SCH 80 4" NIPPLE
12. PVC MAINLINE PIPE FROM BACKFLOW PREVENTER
13. PVC SCH 80 ADAPTER

NOTE:
PROVIDE MIN 24" COILED WIRE AT VALVE.

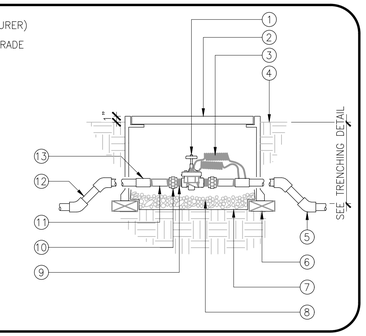

2 MASTER VALVE IN CONCRETE VALVE BOX

NOT TO SCALE

1. RECTANGULAR VALVE BOX (TYP)
2. QUICK COUPLING VALVE BOX (TYP)
3. EDGE OF LAWN, WALK, FENCE, CURB, ETC.

NOTES:
A. CENTER VALVE BOX OVER REMOTE CONTROL VALVE TO FACILITATE SERVICING VALVE.
B. SET REMOTE CONTROL VALVE AND VALVE BOX ASSEMBLIES IN SHRUB AREA.

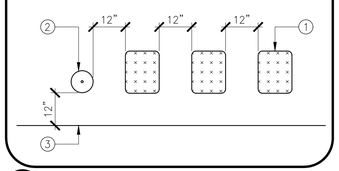

10 VALVE BOX LAYOUT

NOT TO SCALE

1. FINISH GRADE
2. POP-UP ROTARY HEAD (SEE LEGEND FOR TYPE & MANUFACTURER)
3. SCH 80 TRIPLE SWING JOINT ASSEMBLY WITH SCH 80 ELLS & SCH 80 NIPPLES (DIA. AND LENGTH AS REQUIRED)
4. PVC SCH 40 TEE (SxSxT) (SIZE PER LATERAL LINE)
5. PVC LATERAL LINE (SEE IRRIGATION PLAN FOR DIA.)

NOTE:
ROTARY HEAD SHALL BE INSTALLED PERPENDICULAR TO SLOPE.

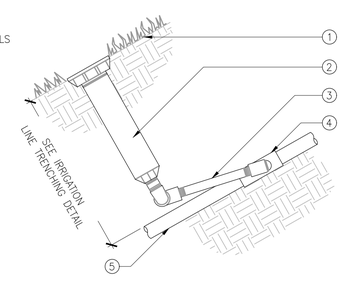

7 ROTARY HEAD ON SLOPE

NOT TO SCALE

1. ROUND VALVE BOX AND LOCKING LID
2. GATE VALVE (SEE IRRIGATION LEGEND, SHEET #)
3. COMMON BRICK (4)
4. 3" MIN. OF PEA GRAVEL
5. IRRIGATION MAIN LINE
6. PVC SCH 80 MALE ADAPTER (TYP)
7. 8" DIA. PVC CLASS 160 PIPE (LENGTH AS REQUIRED)
8. FINISH GRADE
9. INSTALL DRAIN ROCK 2" MIN. BEYOND PERIMETER

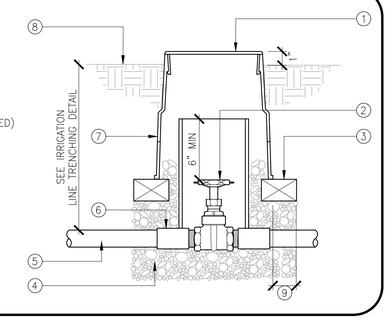

3 GATE VALVE

NOT TO SCALE

1. TREE
2. ROOT BALL
3. BARK MULCH
4. RWS CAP
5. FINISH GRADE
6. SWING ASSEMBLY
7. ½" MALE NPT INLETS
8. PVC SCH 40 TEE OR ELBOW
9. LATERAL LINE
10. NATIVE SOIL
11. ROOT WATERING SYSTEM. SEE PLANS.

NOTES:
1. POSITION 2 UNITS EVENLY SPACED AROUND PLANT, NEAR ROOT BALL.
2. INSTALL PRODUCT FLUSH WITH GROUND SURFACE.
3. WHEN INSTALLING IN EXTREMELY HARD OR CLAY SOILS, ADD ¾" GRAVEL UNDER AND AROUND THE UNIT
4. ONCE RWS HAS BEEN INSTALLED FILL THE BASKET WITH PEA GRAVEL BEFORE LOCKING LID.

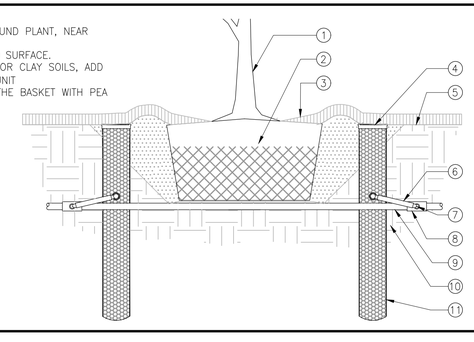

11 TREE BUBBLER

NOT TO SCALE

1. ROUND VALVE BOX WITH LOCKING LID
2. FINISH GRADE
3. QUICK COUPLING VALVE (SEE LEGEND FOR TYPE AND MANUFACTURER)
4. 3" MIN. OF PEA GRAVEL
5. COMMON BRICK FOR SUPPORT (2)
6. LANDSCAPE FABRIC
7. PRE-MANUFACTURED SWING JOINT W/ O-RING AND THREAD STOPS
8. PVC SCH 40 TEE (SxSxT), SIZE PER MAIN LINE
9. PVC MAINLINE, SEE IRRIGATION PLAN FOR SIZE
10. 2" PIPE 30" LONG MIN. W/ TWO STAINLESS STEEL GEAR CLAMPS

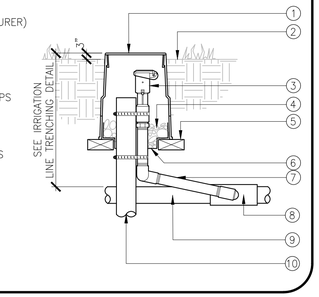

4 QUICK COUPLER VALVE

NOT TO SCALE

811 Know what's below. Call before you dig.

Westwood
Westwood Professional Services, Inc.
6200 STONERIDGE MALL ROAD, SUITE 330
PLEASANTON, CA 94588
T: 925.223.8340
westwoodps.com

NO.	DESCRIPTION	DATE	BY	APP. DATE	APP.

ANTELOPE, CALIFORNIA

NHRPD SIERRA CREEK PARK

7781 WATT AVE IRRIGATION DETAILS

DATE: 08/31/26
DRAFTER: TH, AL, CY
DESIGNER: KF, TH
CHECKED: KF, JG
PROJECT NO. 41541

LICENSED LANDSCAPE ARCHITECT
KARIN N. FOLSOM #4911
Signature
03/31/27
Renewal Date
08/31/26
Date
STATE OF CALIFORNIA

L7.0

Last Saved by: MALoucrecia
Plot Date/Time: 8/31/2026 9:18 AM
Drawing: N:_ODE\Pleasanton\41541 NHRPD Sierra Creek Park\Landscape\Cons\Plans\41541-DT

1. PRECAST CONCRETE TREAD
2. ALUMINUM LOW VOLTAGE WIRING SLEEVE
3. DUCTILE IRON LATERAL LINE SLEEVE
4. DUCTILE IRON MAIN LINE SLEEVE
5. ELECTROGALVANIZED PIPE CLAMP SIZED TO MATCH SLEEVE AS INDICATED ON IRRIGATION PLANS
6. PRECAST CONCRETE BEAM
7. PRECAST CONCRETE ABUTMENT
8. FINISH GRADE AT PATHWAY
9. PREPARED SUBGRADE UNDER PATHWAY

NOTES:
A. SIZE AND LOCATION OF SLEEVES PER IRRIGATION PLANS.
B. MOUNTED CLAMPS SHALL BE SPACED TO ELIMINATE PIPE SAG AND MITIGATE VIBRATION.

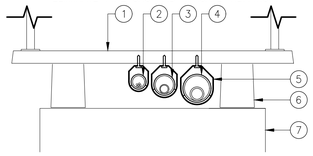

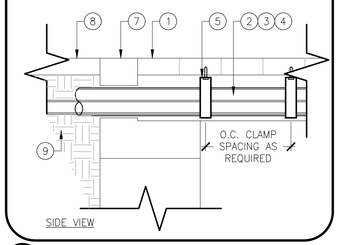

6 SLEEVING INSTALL AT BRIDGE

NOT TO SCALE

1. FINISH GRADE
2. PLASTIC VALVE BOX W/LOCKING LID INSTALLED 1" ABOVE GRADE
3. PENTITE CONNECTOR W/EPOXY SPLICE
4. ID TAG ON CONTROL WIRE
5. DRIP REMOTE CONTROL VALVE (SEE LEGEND FOR TYPE AND MANUFACTURER)
6. COMMON WIRE
7. PVC LATERAL TO SPRINKLER
8. PVC SCH 80 ADAPTER
9. DRIP FILTER (SEE LEGEND FOR TYPE AND MANUFACTURER)
10. PVC SCH 80 UNION
11. PVC SCH 80 NIPPLE
12. PVC MAINLINE
13. LANDSCAPE FABRIC
14. PVC TEE (SxSxT) (SIZE PER MAINLINE)
15. COMMON BRICK (4)
16. 1 CUBIC FOOT OF WASHED GRAVEL

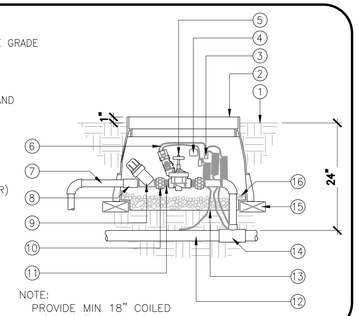

NOTE:
PROVIDE MIN 18" COILED WIRE AT EACH VALVE

3 DRIP REMOTE CONTROL VALVE IN PLASTIC VALVE BOX

NOT TO SCALE

1. FINISH GRADE
2. MULCH, SEE PLANTING PLAN
3. 6" ROUND VALVE BOX
4. AUTOMATIC LINE FLUSH CAP. SEE IRRIGATION LEGEND, SHEET L4.0
5. BLANK DRIP TUBING
6. BRICK SUPPORT (THREE)
7. 3/4" CRUSHED GRAVEL SUMP (1 CU. FT.)
8. ON SURFACE DRIPLINE
9. PVC SCH 40 TEE OR EL
10. PVC EXHAUST HEADER
11. BARB X MALE FITTING

NOTE:
A. ALLOW A MINIMUM OF 6-INCHES OF DRIPLINE TUBING IN VALVE BOX IN ORDER TO DIRECT FLUSHED WATER OUTSIDE VALVE BOX.

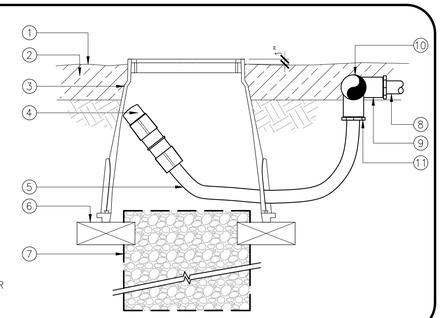

4 DRIPLINE FLUSH POINT

NOT TO SCALE

1. RAIN BIRD DRIP SYSTEM OPERATION INDICATOR (OPERIND)
2. FINISH GRADE
3. 1/2" HORIZONTAL DRIPLINE

NOTES:
A. INSERT BARB TRANSFER FITTING DIRECTLY INTO DRIPLINE TUBING.
B. VAN NOZZLE MAY BE SET TO CLOSED, OR IF IT IS DESIRED TO SEE SPRAY FROM THE NOZZLE, SET THE ARC TO 1/4 HORIZONTAL PATTERN. THE FLOW FROM THE NOZZLE (0.3 GPM) SHOULD BE ACCOUNTED FOR IN THE SYSTEM DESIGN.

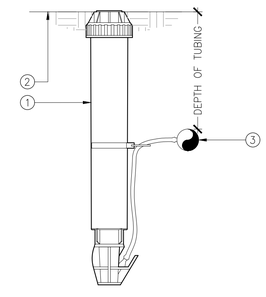

5 DRIPLINE OPERATION INDICATOR

NOT TO SCALE

1. VALVE BOX WITH FLUSH CAP, SEE DRIPLINE FLUSH POINT DETAIL #, THIS SHEET.
2. RAIN BIRD OPERATION INDICATOR, SEE DETAIL #, THIS SHEET.
3. BARB INSERT FITTING (RAIN BIRD XFF-ELBOW/XFF-TEE/XFF-COUP OR EQUAL)
4. DRIPLINE TUBING (HEADER)
5. PERIMETER DRIPLINE TUBING TO BE INSTALLED 6" FROM PERIMETER
6. PVC SUPPLY PIPE FROM VALVE (SIZED TO MEET LATERAL LINE FLOW DEMAND)
7. RAIN BIRD QF HEADER (XQF-10-(12 OR 18))
8. RAIN BIRD QF HEADER PRE-INSTALLED BARB FITTING
9. DRIPLINE TUBING (SEE PLAN FOR EMITTER AND LINE SPACING)
10. JUTE STAPLES/6" "U" PINS OR EQUAL (2' O.C.)
11. MALE ADAPTER INSERT FITTING WITH LOCK CLAMP
12. SCH 40 PVC THREADED CAP
13. SCH 40 PVC ELBOW
14. PVC RISER PIPE (LENGTH AS NEEDED)
15. SCH 40 PVC (SLIP X THREAD) COUPLER/REDUCER BUSHING

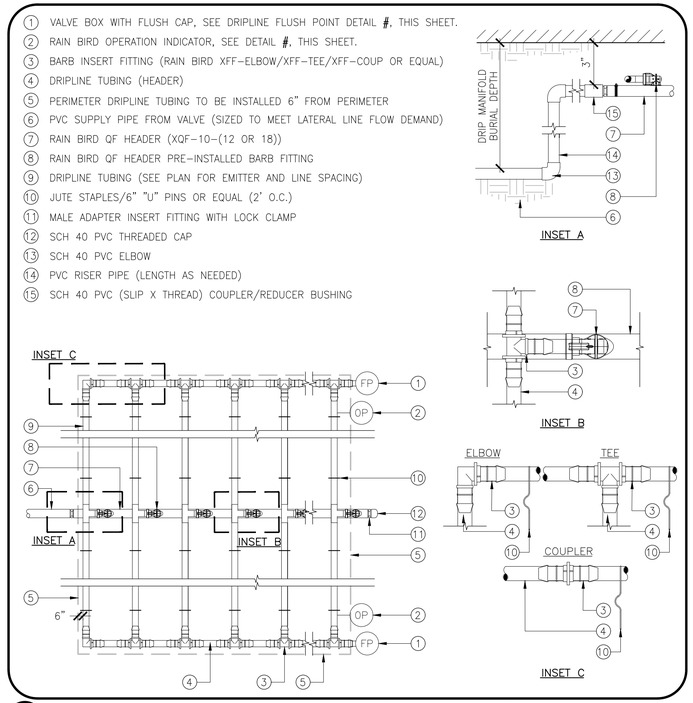

1 IN-LINE DRIP TUBING CENTER FEED CONFIGURATION (LESS THAN 16 GPM)

NOT TO SCALE

1. VALVE BOX WITH FLUSH CAP, SEE DRIPLINE FLUSH POINT DETAIL #, THIS SHEET.
2. RAIN BIRD OPERATION INDICATOR, SEE DETAIL #, THIS SHEET.
3. BARB INSERT FITTING (RAIN BIRD XFF-ELBOW/XFF-TEE/XFF-COUP OR EQUAL)
4. DRIPLINE TUBING (HEADER)
5. PERIMETER DRIPLINE TUBING TO BE INSTALLED 6" FROM PERIMETER
6. PVC SUPPLY PIPE FROM VALVE (SIZED TO MEET LATERAL LINE FLOW DEMAND)
7. RAIN BIRD QF HEADER (XQF-10-(12 OR 18))
8. RAIN BIRD QF HEADER PRE-INSTALLED BARB FITTING
9. DRIPLINE TUBING (SEE PLAN FOR EMITTER AND LINE SPACING)
10. 6" JUTE STAPLES/6" "U" PINS OR EQUAL (2' O.C.)
11. MALE ADAPTER INSERT FITTING WITH LOCK CLAMP
12. SCH 40 PVC THREADED CAP
13. SCH 40 PVC ELBOW
14. PVC RISER PIPE (LENGTH AS NEEDED)
15. SCH 40 PVC (SLIP X THREAD) COUPLER/REDUCER BUSHING
16. SCH 40 PVC (SLIP X SLIP) TEE W/ REDUCER BUSHING (SIZE AS NEEDED)
17. 3/4" OR 1" SCH 40 PVC (SLIP X THREAD) ELBOW

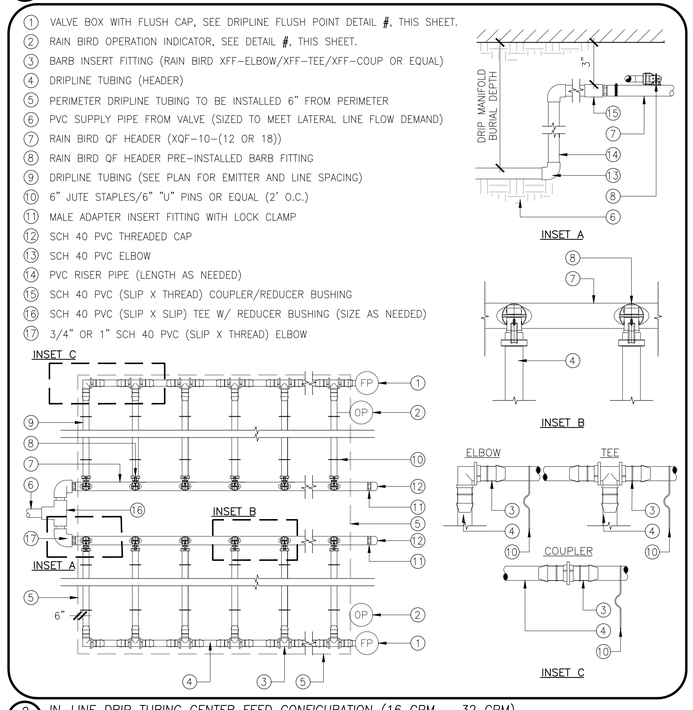

2 IN-LINE DRIP TUBING CENTER FEED CONFIGURATION (16 GPM – 32 GPM)

NOT TO SCALE

Know what's below. Call before you dig.

Westwood
Westwood Professional Services, Inc.
6200 STONERIDGE MALL ROAD, SUITE 330
PLEASANTON, CA 94588
T: 925.223.8340
westwoodps.com

NO.	DESCRIPTION	DATE	BY	APP. DATE	APP.

ANTELOPE, CALIFORNIA

NHRPD SIERRA CREEK PARK

7781 WATT AVE IRRIGATION DETAILS

DATE: 08/31/26
DRAFTER: TH, AL, CY
DESIGNER: KF, TH
CHECKED: KF, JG
PROJECT NO. 41541

LICENSED LANDSCAPE ARCHITECT
KAREN N. FOLSOM #4911
Signature
03/31/27
Renewal Date
08/31/26
Date
STATE OF CALIFORNIA

L7.1

Last Saved by: MALoucrecia
Plot Date/Time: 8/31/2026 9:18 AM
Drawing: N:_ODE\Pleasanton\41541 NHRPD Sierra Creek Park\Landscape\ConstPlans\41541-DT

1. TREE, SEE PLANTING DETAIL 1 AND GENERAL PLANTING NOTES SHEET L5.0, FOR GENERAL PLANTING PROCEDURES AND SPECIFICATIONS
2. 6" HIGH WATERING BASIN, CONTINUOUS AROUND THE PLANT PIT, COMPACT BASIN BERM SOIL. MAINTAIN ALL BASINS DAILY THROUGHOUT THE MAINTENANCE PERIOD
3. BACKFILL MIX (SEE PLANTING NOTES)
4. COMPACTED/TAMPED SOIL FOR STABILITY
5. MAX SLOPE (1.5:1)
6. EXISTING SOIL AND SLOPE (2:1 OR FLATTER)

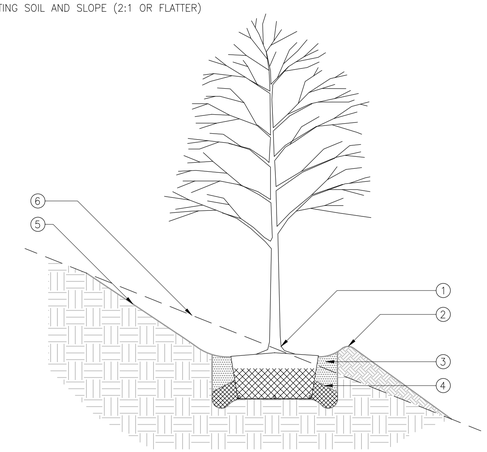

6 TREE PLANTING ON SLOPE

NOT TO SCALE

1. LINEAR ROOT BARRIER INSTALLATION. INSTALL 10' O.C.
2. SEE TREE PLANTING DETAIL 1, THIS SHEET
3. MULCH. SEE PLANTING NOTES
4. ROOT BARRIER: PER PLANTING PLAN LEGEND
5. BACK OF CURB OR WALK

NOTES:

A. ROOT BARRIERS 24 INCHES DEEP AND 20-FEET IN LENGTH CENTERED ON TRUNKS SHALL BE INSTALLED FOR ALL TREES PLANTED WITHIN 5' OF PUBLIC SIDEWALKS AND CURBS PER SACRAMENTO COUNTY STREET IMPROVEMENT STANDARDS SECTION 4-32. ROOT BARRIERS ARE REQUIRED CONTINUOUS AROUND ALL SIDES OF LANDSCAPE AREAS BETWEEN CURB AND SIDEWALK. ROOT BARRIERS SHALL CONFORM TO SECTION 20-2.01 AND 50-43.13 OF THE SACRAMENTO COUNTY TECHNICAL PROVISIONS.

B. FOR ON-SITE TREES, WITHIN 5' OF HARDSCAPE INSTALL ROOT BARRIERS ALONG EDGE OF PAVEMENT BUILDING OR OTHER HARD SURFACES.

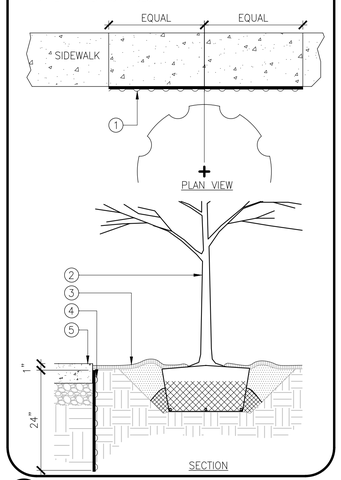

5 ROOT BARRIER DETAIL

NOT TO SCALE

1. EACH TREE SHALL BE PLANTED SUCH THAT THE TRUNK FLARE IS VISIBLE AT THE TOP OF THE ROOT BALL. TREES WHERE THE TRUNK FLARE IS NOT VISIBLE SHALL BE REJECTED. DO NOT COVER THE TOP OF THE ROOT BALL WITH SOIL.
2. 4" HIGH EARTH BERM BEYOND EDGE OF ROOT BALL.
3. SEE PLANTING NOTES FOR SOIL AMENDMENT MIXTURE. AMENDED SOIL MUST NOT BE SO COMPACTED AS TO IMPEDE ROOT GROWTH OR DRAINAGE.
4. REMOVE ALL TWINE, ROPE, WIRE AND BURLAP FROM TOP HALF OF ROOT BALL.
5. 1:1 SLOPE ON SIDES OF PLANTING HOLE. SCARIFY SIDES AND BOTTOM OF PIT.
6. PLACE ROOT BALL ON UNDISTURBED SOIL.
7. FERTILIZER PLANT TABS: 5 PER 15 GAL TREE, 8 PER 24" BOX TREE, 12 PER 36" BOX TREE (IF REQUIRED)
8. TAMP SOIL AROUND ROOT BALL BASE FIRMLY WITH FOOT PRESSURE SO THAT ROOT BALL DOES NOT SHIFT.
9. SET TOP OF ROOT BALL 1"-2" ABOVE SURROUNDING GRADE.
10. NATIVE SOIL
11. MULCH RING 3' DIAMETER MIN., 4' DIAMETER PREFERRED TO A DEPTH OF 3". DO NOT PLACE MULCH IN CONTACT WITH TREE TRUNK. MAINTAIN THE MULCH WEED-FREE DURING THE MAINTENANCE PERIOD.
12. MARK THE NORTH SIDE OF THE TREE IN THE NURSERY, AND ROTATE TREE TO FACE NORTH AT THE SITE.
13. V.I.T. CINCH TIES 32" STRAP OR EQUAL
14. SECURE WITH 1½" GALVANIZED NAIL OR SCREW
15. 2" DIA. X 8' (15 GAL.-24" BOX), 3" DIA. X 10' (36"-48" BOX) UNTREATED LODGEPOLE STAKES OR OTHER APPROVED STAKE MATERIAL. ALL STAKES SHALL BE DRIVEN OUTSIDE THE EDGE OF THE ROOTBALL.

NOTES:

A. DO NOT HEAVILY PRUNE THE TREE AT PLANTING. PRUNE ONLY CROSSOVER LIMBS, CO-DOMINANT LEADERS, AND BROKEN OR DEAD BRANCHES. SOME INTERIOR TWIGS AND LATERAL BRANCHES MAY BE PRUNED; HOWEVER, DO NOT REMOVE THE TERMINAL BUDS OF BRANCHES THAT EXTEND TO THE EDGE OF THE CROWN.
B. FASTEN TIE TIGHT ENOUGH TO KEEP FROM SLIPPING WHILE ALLOWING FOR SOME TRUNK MOVEMENT.
C. REMOVE ALL STAKING AS SOON AS THE TREE HAS GROWN SUFFICIENT ROOTS.
D. TREES WITH POOR QUALITY ROOT BALLS OR ROOT BALLS THAT HAVE BEEN CRACKED OR DAMAGED SHALL BE REJECTED.
E. TREES THAT HAVE GROWN TOO CLOSE TOGETHER IN THE NURSERY, RESULTING IN WEAK TRUNKS SHALL BE REJECTED.

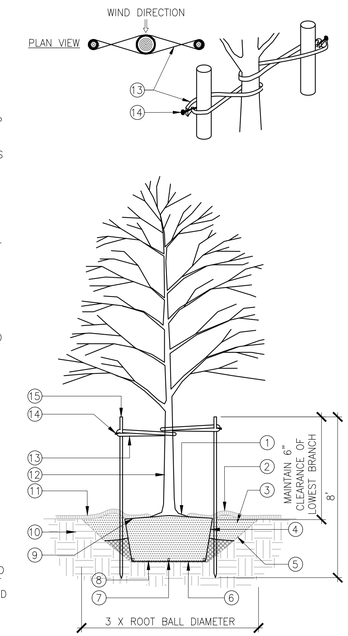

1 TREE PLANTING AND STAKING

NOT TO SCALE

1. SHRUBS
2. SHRUBS SHALL BE TRIANGULAR SPACED PER O.C. SPACING ON PLANTING LEGEND AND/OR PLANTING PLAN.

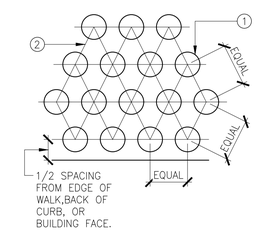

3 SHRUB SPACING

NOT TO SCALE

1. CROWN 2" ABOVE GROUND
2. FERTILIZER PLANT TABS: 1 PER 1 GAL, 3 PER 5 GAL
3. BACKFILL MIX (SEE PLANTING SPECS)
4. ROOTBALL
5. SCARIFY BOTTOM OF HOLE

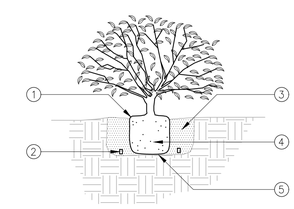

2 SHRUB PLANTING

NOT TO SCALE

1. CROWN 2" ABOVE GROUND,
2. FIRMLY COMPACTED SAUCER ON LOWER SIDES OF PLANT TO RETAIN WATER
3. FERTILIZER PLANT TABS: 1 PER 1 GAL, 3 PER 5 GAL
4. ORIGINAL SLOPE
5. BACKFILL MIX (SEE PLANTING SPECS)
6. SCARIFY BOTTOM OF HOLE
7. MULCH AT LEAST 2" AWAY FROM TRUNK OF PLANT

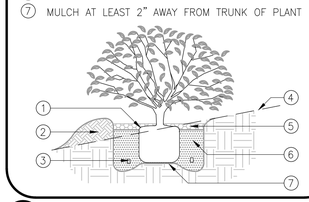

4 SHRUB PLANTING ON SLOPE

NOT TO SCALE

811 Know what's below. Call before you dig.

Westwood
Westwood Professional Services, Inc.
6200 STONERIDGE MALL ROAD, SUITE 330
PLEASANTON, CA 94588
T: 925.223.8340
westwoodps.com

NO.	DESCRIPTION	DATE	BY	APP. DATE	APP.

ANTELOPE, CALIFORNIA

NHRPD SIERRA CREEK PARK

7781 WATT AVE
PLANTING DETAILS

DATE: 08/31/26
DRAFTER: TH, AL, CY
DESIGNER: KF, TH
CHECKED: KF, JG

PROJECT NO.
41541

LICENSED LANDSCAPE ARCHITECT
KAREN N. FOLSOM
Signature
03/31/27
Renewal Date
08/31/26
Date
STATE OF CALIFORNIA

L8.0

.pdf
Last Saved by: MALoumno
Plot Date: Wednesday, 09/09/26 8:16 AM
Drawing: N:_ODE\Pleasanton\41541 NHRPD Sierra Creek Park\Landscape\Cons\Plans\41541-DT

MATCHLINE "A" - SEE SHEET C2.2

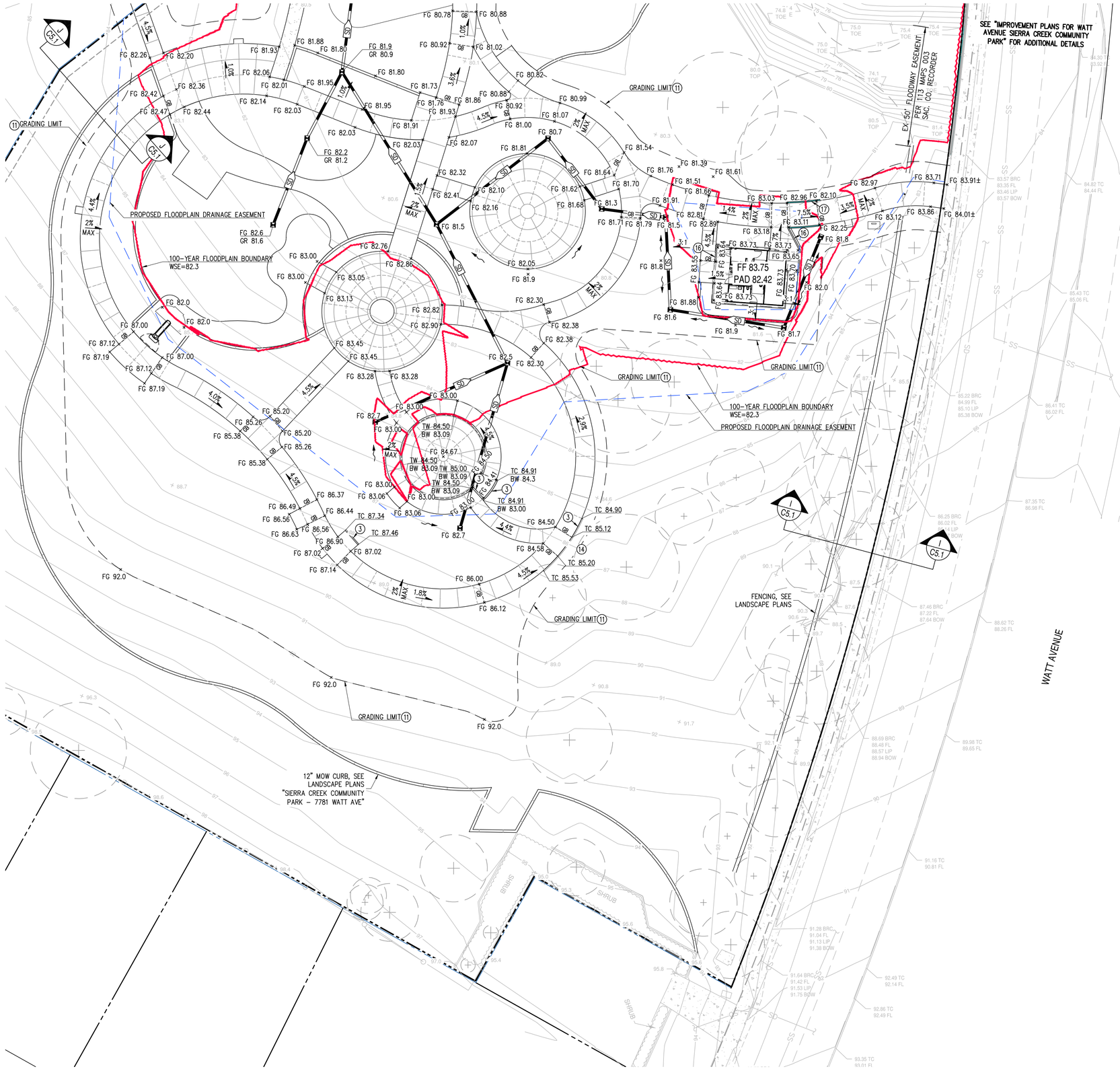

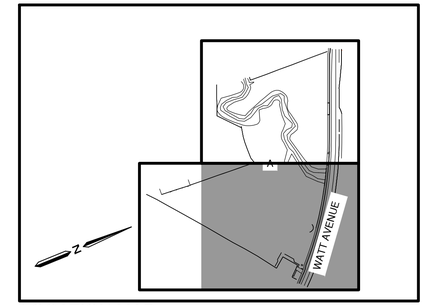

LOCATION MAP

1"=300'

LEGEND:

- PROPOSED PAVEMENT (2.5" AC/8" AB, TI = 4)
- VEGETATED SWALE AND STORMWATER PLANTER, SEE DETAIL A SHEET C5.2
- APPROXIMATE 100 BOUNDAARY PER "SIERRA CREEK PARK HYDRAULIC ANALYSIS" PREPARED BY TODD REMINGTON, DATED 5/28/2024
- PROPOSED FLOODPLAIN DRAINAGE EASEMENT
- (1) CASE C RAMP, PER DETAIL A88A SHEET C6.2
- (2) MODIFIED VERTICAL CURB & GUTTER PER DETAIL B SHEET C6.1
- (3) TYPE 3 CURB PER COUNTY OF SACRAMENTO STD 4–30 SHEET C6.2
- (4) MAX 2% SLOPE IN ALL DIRECTIONS WITHIN ADA PARKING STALLS AND ACCESS AISLES
- (5) FLOW THRU CURB PER DETAIL C SHEET C6.1
- (6) CURB TRANSITION PER DETAIL D SHEET C6.1
- (7) UNDER SIDEWALK DRAIN PER DETAIL A SHEET C6.1
- (8) WALKWAY AT CULVERT PER LANDSCAPE PLANS "SIERRA CREEK COMMUNITY PARK – 7781 WATT AVE"DETAIL 5 SHEET L6.1
- (9) BRIDGE BY OTHERS
- (10) MAINTAIN 30" MAXIMUM FROM WALKWAY SURFACE TO ADJACENT FG NEXT TO WALKWAY
- (11) CONTRACTOR TO GRADE 5:1 MAX SLOPE UNTIL REACHING EX GRADE
- (12) TYPE 1A CURB & GUTTER WITH ATTACHED SIDEWALK PER COUNTY OF SACRAMENTO STD 4–30 SHEET C6.2
- (13) 5' CURB TRANSITION (TC TO TRC)
- (14) CONTRACTOR TO GRADE 3:1 MAX SLOPE UNTIL REACHING EX GRADE AT DRIPLINE OF EXISTING TREE
- (15) BIORETENTION SEE DETAIL A SHEET C5.2
- (16) VARYING CURB WALL 1.5' MAX
- (17) HANDRAIL & CURB RAMP PER LANDSCAPE PLANS "SIERRA CREEK COMMUNITY PARK – 7781 WATT AVE" SHEET L6.1

NOTES:

1. CONTRACTOR TO MAINTAIN 2% MAX CROSS SLOPE ON WALKWAYS
2. SEE GEOTECHNICAL REPORT FOR ADDITIONAL GRADING DETAIL
3. ROOT BARRIERS SHALL BE PROVIDED ONLY AS REQUIRED PER SECTION 4, SUBSECTION 4–32 OF THE COUNTY IMPROVEMENT STANDARDS.

SIERRA CREEK – EARTHWORK SUMMARY

SITE	CUT (CY)	FILL (CY)	NET (CY)
ON-SITE	4,680	3,880	800 (C)
SHRINKAGE (5%)	(240)		
CONSOLIDATION (0.10')	(560)		
TOTAL	3,880	3,880	0

0 10 20 40

SCALE: 1" = 20'

Know what's **below.** **Call** before you dig.

Westwood
Westwood Professional Services, Inc.
8200 STONERIDGE MALL ROAD, SUITE 300
PLEASANTON, CA 94588
T: 925.223.8340
wwdesign.com

NO.	DESCRIPTION	DATE	BY	APP. DATE	APP.

ANTELOPE, CALIFORNIA

SIERRA CREEK COMMUNITY PARK GRADING PLAN

DATE: 08/31/2026
DRAFTER: JJ
DESIGNER: ZW
CHECKED: RC

PROJECT NO. 41541

REGISTERED PROFESSIONAL ENGINEER ROBERT T. CHEN 59425 CIVIL STATE OF CALIFORNIA

C2.1

####

Last Saved by: Cravenjon
Plot Date: Tue 8/26/2025 11:52 AM
Drawing: N:_ODE\Pleasanton\41541 NRHPD Sierra Creek Park\Civil\ConstPlans\Onsite\41541-GR (CIVIL)

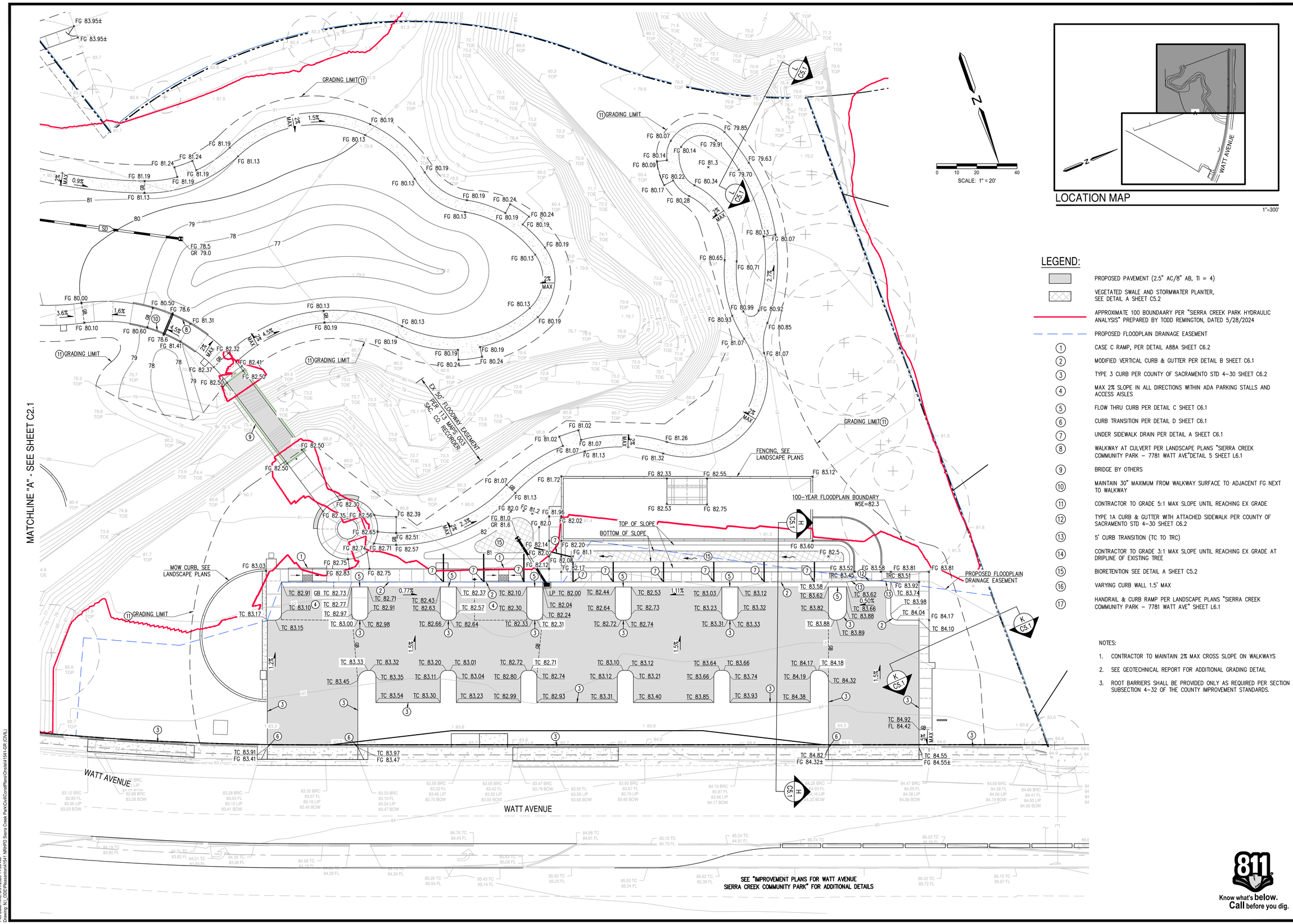

Westwood
Westwood Professional Services, Inc.
8200 STONERIDGE MALL ROAD, SUITE 330
PLEASANTON, CA 94588
T: 925.223.8340
westwoodps.com

NO.	DESCRIPTION	DATE	BY	APP. DATE	APP.

ANTELOPE, CALIFORNIA

SIERRA CREEK COMMUNITY PARK
GRADING PLAN

DATE: 08/31/2026
DRAFTER: JJ
DESIGNER: ZW
CHECKED: RC
PROJECT NO. 41541

REGISTERED PROFESSIONAL ENGINEER ROBERT T. CHEN 59425 CIVIL STATE OF CALIFORNIA

C2.2

####

811 Know what's below. Call before you dig.

Last Saved by: Cravenzion
Plot Date: Tuesday, October 01, 2024 11:53 AM
Drawing: N:_ODE\Pleasanton\41541 NRHPD Sierra Creek Park\Civil\Const\Plans\Onsite\41541-GR (CIVIL)

MATCHLINE "A" - SEE SHEET C3.2

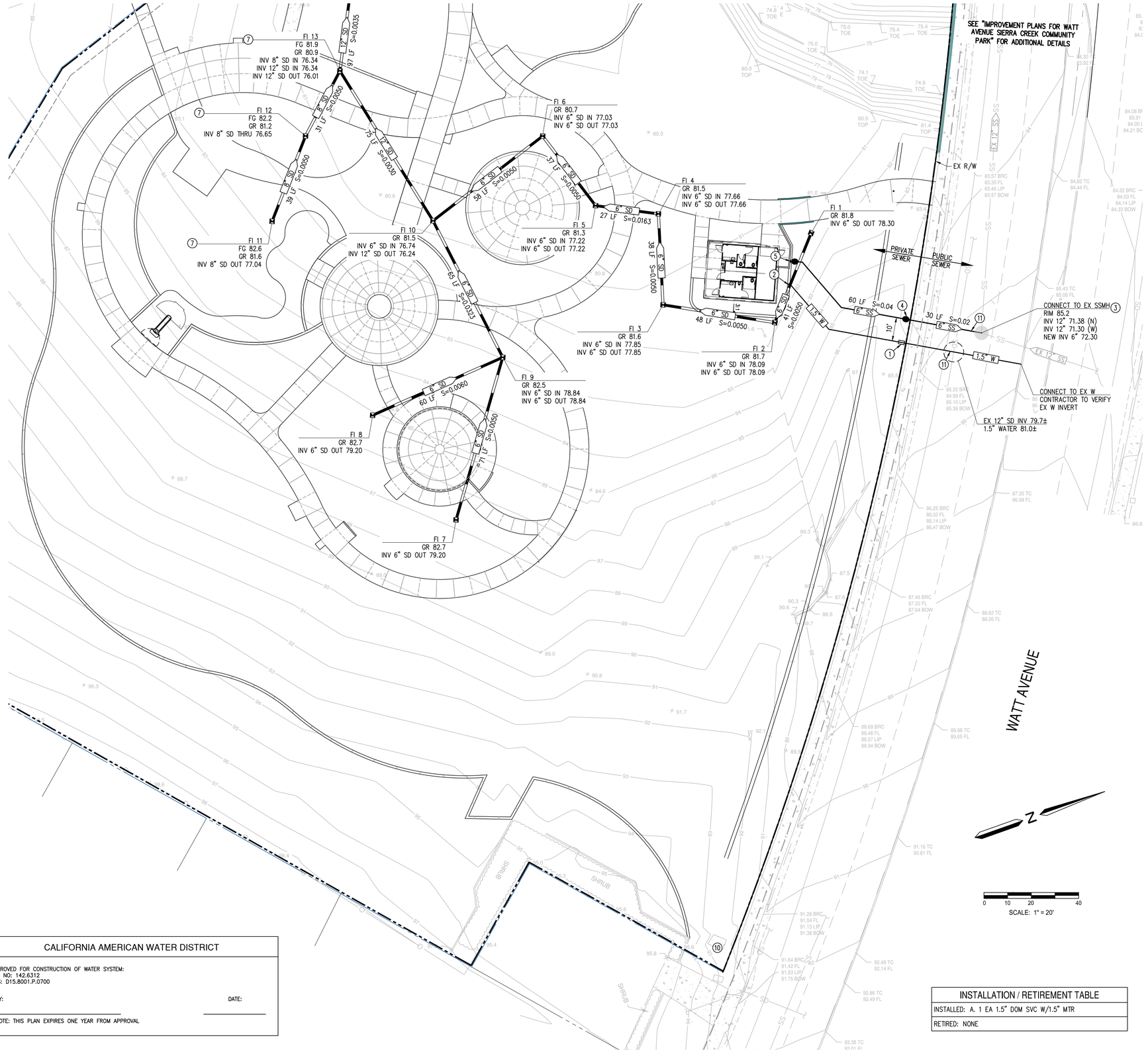

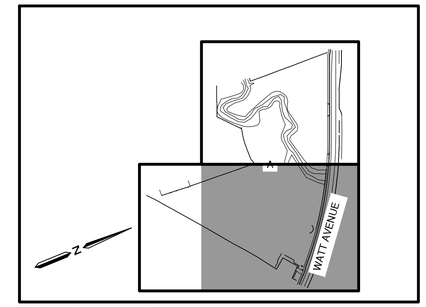

LOCATION MAP

STORM DRAIN STRUCTURE SCHEDULE		
STRUCTURE	TYPE	DESCRIPTION
CB 1	SACRAMENTO COUNTY 9-13B	DROP INLET TYPE B
FI 10-15	CHRISTY V24	V24 DRAIN BOX 20-3/4" X 19-1/4"
FI 1-8	NDS 9" CATCH BASIN	NDS 9"X9" CATCH BASIN (PART NO. 932) W/ NDS GRATE (PART NO. 980) OR APPROVED EQUAL
FI 9	NDS 9" CATCH BASIN	NDS 9"X9" CATCH BASIN (PART NO. 932) W/ NDS ATRIUM GRATE (PART NO. 981) OR APPROVED EQUAL

LEGEND:

1. 1.5" WATER METER & 1.5" WATER SERVICE PER CAW STANDARD DETAILS CAW-ND-W202 & CAW-ND-W204. SEE SHEET C6.3. INSTALL REDUCED PRESSURE BACKFLOW PER UBC LIST OF APPROVED DEVICES.
2. 1.5" WATER SERVICE, INV 3' BELOW FF, SEE PLANS BY OTHERS FOR CONTINUATION
3. ADJUST EX SSMH TO GRADE AS NEEDED PER SACRAMENTO AREA SEWER DISTRICT DETAIL MH-03, SEE NOTE #6 FOR MORE DETAIL
4. CONSTRUCT 30 LF 6" PVC SEWER LOWER LATERAL PER SACRAMENTO AREA SEWER DISTRICT DETAIL LL-01A @2% SLOPE WITH WYE CONNECTION & W/ CLEANOUT PER DETAIL LL-02 AT RIGHT-OF-WAY.
5. PRIVATE SEWER, INV 5' BELOW FF, SEE PLANS BY OTHERS FOR CONTINUATION
6. UNDER SIDEWALK DRAIN PER DETAIL A SHEET C6.1
7. CONNECT TO RUBBER SURFACING DRAINAGE SYSTEM. DRAIN INLET GRATE ELEVATION TO BE SET UNDER RUBBER SURFACING
8. BUBBLE UP FIELD INLET, SEE DETAIL E SHEET C6.1
9. STORM DRAIN CULVERT PER LANDSCAPE PLANS "SIERRA CREEK COMMUNITY PARK – 7781 WATT AVE" DETAIL 5 SHEET L6.1
10. IRRIGATION POC, CONNECT TO EXISTING 2-2" WATER METER AND 3" BACKFLOW PREVENTION DEVICE. SEE LANDSCAPE PLANS "SIERRA CREEK COMMUNITY PARK – 7781 WATT AVE" SHEET L4.1 FOR IRRIGATION DETAILS
11. TRENCHING AND PAVEMENT RESTORATION PER COUNTY OF SACRAMENTO STD 4-64 SEE SHEET C6.2, WATER TRENCH WIDTH PER SACRAMENTO COUNTY CONSTRUCTION SPECIFICATIONS SECTION 19 AND SEWER TRENCH WIDTH PER SASD SECTION 311

NOTES:

1. POTABLE WATER MAIN SHALL MAINTAIN A MINIMUM OF 4' COVER.
2. CONTRACTOR SHALL FIELD VERIFY EXISTING UTILITIES INVERT AND LOCATION PRIOR TO ESTABLISHING CONNECTIONS.
3. CONTRACTOR SHALL MAINTAIN MIN VERTICAL CLEARANCE BETWEEN WATER SERVICE LATERALS AND OTHER UTILITIES.
4. TREE COORDINATION NOTE: WATER LINES, DRAIN LINES, SEWER LINES AND OTHER UTILITIES SHOWN ON THESE PLANS HAVE BEEN COORDINATED WITH REQUIRED TREE LOCATIONS. ELECTRICAL CONDUITS OR OTHER UTILTIES NOT SHOWN ON THESE PLANS SHALL BE LOCATED SO AS TO NOT CONFLICT WITH REQUIRED TREE LOCATIONS. SEE APPROVED LANDSCAPE PLANS FOR LOCATIONS.
5. ALL ONSITE DRAINAGE IMPROVEMENTS SHALL BE CONSIDERED AS PRIVATE FACILITIES AND MAINTAINED BY THE PROPERTY OWNER.
6. SEWER TAP NOTE:
   SACRAMENTO AREA SEWER DISTRICT WILL PERFORM THE SEWER TAP AFTER PAYMENT OF FEES. EMAIL PERMITSERVICES@SACSEWER.COM WITH THE FOLLOWING INFORMATION TO PAY SEWER TAP FEES.
   - APPROVED IMPROVEMENT PLANS (WITH PRE-CONSTRUCTION APPROVAL SIGNATURE FOR LOWER LATERAL ONLY PLANS)
   - ORDER NUMBER
   - CONTRACTOR'S NAME AND PHONE NUMBER

   CONTRACTOR WILL PROVIDE ALL TRAFFIC CONTROL, PAVEMENT CUTTING, EXCAVATION, SHORING, PIPE LAYING, PIPE BEDDING, BACKFILL, AND RESTORATION IN ACCORDANCE WITH THESE PLANS AND THE LOCAL JURISDICTION. AN ACCESS PERMIT IS REQUIRED BEFORE CONNECTING TO THE SACRAMENTO AREA SEWER DISTRICT'S SYSTEM. PLEASE ALLOW 10 BUSINESS DAYS FOR PROCESSING OF THE ACCESS PERMIT.
7. NOT APPROVED FOR PRIVATE UNDERGROUND FIRE SERVICE INSTALLATION. A SEPARATE PLAN SUBMITTAL IS REQUIRED FROM THE INSTALLING CONTRACTOR. SEE SACRAMENTO METROPOLITAN FIRE DISTRICT NOTES.

CALIFORNIA AMERICAN WATER DISTRICT
APPROVED FOR CONSTRUCTION OF WATER SYSTEM: FILE NO: 142.6312 WBS: D15.8001.F.0700
BY: DATE:
NOTE: THIS PLAN EXPIRES ONE YEAR FROM APPROVAL

INSTALLATION / RETIREMENT TABLE
INSTALLED: A. 1 EA 1.5" DOM SVC W/1.5" MTR
RETIRED: NONE

Know what's below. Call before you dig.

Westwood
Westwood Professional Services, Inc.
6200 STONERIDGE MALL ROAD, SUITE 330
PLEASANTON, CA 94588
T: 925.223.8340
westwoodps.com

NO.	DESCRIPTION	DATE	BY	APP. DATE	APP.

ANTELOPE, CALIFORNIA

SIERRA CREEK COMMUNITY PARK
UTILITY PLAN

DATE: 08/31/2026
DRAFTER: JJ
DESIGNER: ZW
CHECKED: RC
PROJECT NO. 41541

REGISTERED PROFESSIONAL ENGINEER ROBERT I. CREE 59425 CIVIL STATE OF CALIFORNIA

C3.1

####

Last Saved by: Czwernich
Plot Date/Time: 8/31/2026 11:54 AM
Drawing: N:_ODE\Pleasanton\41541 NRHPD Sierra Creek Park\Civil\Const\Plans\Onsite\41541-UT (CIVIL)

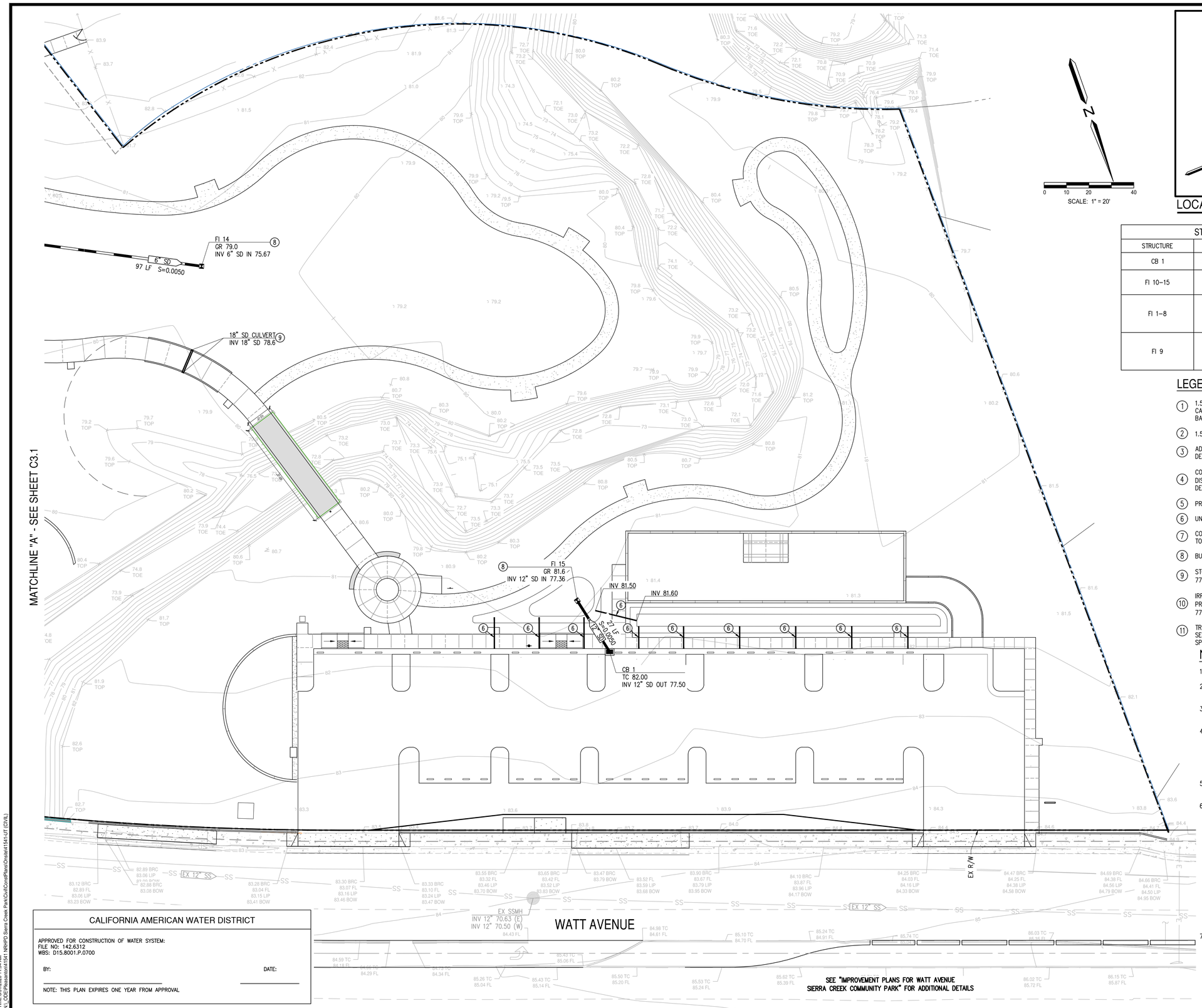

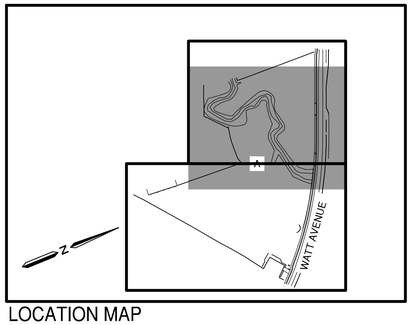

LOCATION MAP

1"=300'

STORM DRAIN STRUCTURE SCHEDULE		
STRUCTURE	TYPE	DESCRIPTION
CB 1	SACRAMENTO COUNTY 9-13B	DROP INLET TYPE B
FI 10-15	CHRISTY V24	V24 DRAIN BOX 20-3/4" X 19-1/4"
FI 1-8	NDS 9" CATCH BASIN	NDS 9"X9" CATCH BASIN (PART NO. 932) W/ NDS GRATE (PART NO. 980) OR APPROVED EQUAL
FI 9	NDS 9" CATCH BASIN	NDS 9"X9" CATCH BASIN (PART NO. 932) W/ NDS ATRIUM GRATE (PART NO. 981) OR APPROVED EQUAL

LEGEND:

1. 1.5" WATER METER & 1.5" WATER SERVICE PER CAW STANDARD DETAILS CAW-ND-W202 & CAW-ND-W204. SEE SHEET C6.3. INSTALL REDUCED PRESSURE BACKFLOW PER UBC LIST OF APPROVED DEVICES.
2. 1.5" WATER SERVICE, INV 3' BELOW FF, SEE PLANS BY OTHERS FOR CONTINUATION
3. ADJUST EX SSMH TO GRADE AS NEEDED PER SACRAMENTO AREA SEWER DISTRICT DETAIL MH-03, SEE NOTE #6 FOR MORE DETAIL
4. CONSTRUCT 30 LF 6" PVC SEWER LOWER LATERAL PER SACRAMENTO AREA SEWER DISTRICT DETAIL LL-01A @2% SLOPE WITH WYE CONNECTION & W/ CLEANOUT PER DETAIL LL-02 AT RIGHT-OF-WAY.
5. PRIVATE SEWER, INV 5' BELOW FF, SEE PLANS BY OTHERS FOR CONTINUATION
6. UNDER SIDEWALK DRAIN PER DETAIL A SHEET C6.1
7. CONNECT TO RUBBER SURFACING DRAINAGE SYSTEM. DRAIN INLET GRATE ELEVATION TO BE SET UNDER RUBBER SURFACING
8. BUBBLE UP FIELD INLET, SEE DETAIL E SHEET C6.1
9. STORM DRAIN CULVERT PER LANDSCAPE PLANS "SIERRA CREEK COMMUNITY PARK – 7781 WATT AVE" DETAIL 5 SHEET L6.1
10. IRRIGATION POC, CONNECT TO EXISTING 2-2" WATER METER AND 3" BACKFLOW PREVENTION DEVICE. SEE LANDSCAPE PLANS "SIERRA CREEK COMMUNITY PARK – 7781 WATT AVE" SHEET L4.1 FOR IRRIGATION DETAILS
11. TRENCHING AND PAVEMENT RESTORATION PER COUNTY OF SACRAMENTO STD 4-64 SEE SHEET C6.2, WATER TRENCH WIDTH PER SACRAMENTO COUNTY CONSTRUCTION SPECIFICATIONS SECTION 19 AND SEWER TRENCH WIDTH PER SASD SECTION 311

NOTES:

1. POTABLE WATER MAIN SHALL MAINTAIN A MINIMUM OF 4' COVER.
2. CONTRACTOR SHALL FIELD VERIFY EXISTING UTILITIES INVERT AND LOCATION PRIOR TO ESTABLISHING CONNECTIONS.
3. CONTRACTOR SHALL MAINTAIN MIN VERTICAL CLEARANCE BETWEEN WATER SERVICE LATERALS AND OTHER UTILITIES.
4. TREE COORDINATION NOTE: WATER LINES, DRAIN LINES, SEWER LINES AND OTHER UTILITIES SHOWN ON THESE PLANS HAVE BEEN COORDINATED WITH REQUIRED TREE LOCATIONS. ELECTRICAL CONDUITS OR OTHER UTILTIES NOT SHOWN ON THESE PLANS SHALL BE LOCATED SO AS TO NOT CONFLICT WITH REQUIRED TREE LOCATIONS. SEE APPROVED LANDSCAPE PLANS FOR LOCATIONS.
5. ALL ONSITE DRAINAGE IMPROVEMENTS SHALL BE CONSIDERED AS PRIVATE FACILITIES AND MAINTAINED BY THE PROPERTY OWNER.
6. SEWER TAP NOTE:
   SACRAMENTO AREA SEWER DISTRICT WILL PERFORM THE SEWER TAP AFTER PAYMENT OF FEES. EMAIL PERMITSERVICES@SACSEWER.COM WITH THE FOLLOWING INFORMATION TO PAY SEWER TAP FEES.
   - APPROVED IMPROVEMENT PLANS (WITH PRE-CONSTRUCTION APPROVAL SIGNATURE FOR LOWER LATERAL ONLY PLANS)
   - ORDER NUMBER
   - CONTRACTOR'S NAME AND PHONE NUMBER

   CONTRACTOR WILL PROVIDE ALL TRAFFIC CONTROL, PAVEMENT CUTTING, EXCAVATION, SHORING, PIPE LAYING, PIPE BEDDING, BACKFILL, AND RESTORATION IN ACCORDANCE WITH THESE PLANS AND THE LOCAL JURISDICTION. AN ACCESS PERMIT IS REQUIRED BEFORE CONNECTING TO THE SACRAMENTO AREA SEWER DISTRICT'S SYSTEM. PLEASE ALLOW 10 BUSINESS DAYS FOR PROCESSING OF THE ACCESS PERMIT.
7. NOT APPROVED FOR PRIVATE UNDERGROUND FIRE SERVICE INSTALLATION. A SEPARATE PLAN SUBMITTAL IS REQUIRED FROM THE INSTALLING CONTRACTOR. SEE SACRAMENTO METROPOLITAN FIRE DISTRICT NOTES.

CALIFORNIA AMERICAN WATER DISTRICT

APPROVED FOR CONSTRUCTION OF WATER SYSTEM:
FILE NO: 142.6312
WBS: D15.8001.P.0700

BY: _____ DATE: _____

NOTE: THIS PLAN EXPIRES ONE YEAR FROM APPROVAL

Know what's **below.**
Call before you dig.

Westwood
Westwood Professional Services, Inc.
6200 STONERIDGE MALL ROAD, SUITE 330
PLEASANTON, CA 94588
T: 925.223.8340
westwoodps.com

NO.	DESCRIPTION	DATE	BY	APP. DATE	APP.

ANTELOPE, CALIFORNIA

SIERRA CREEK COMMUNITY PARK
UTILITY PLAN

DATE: 08/31/2026
DRAFTER: JJ
DESIGNER: ZW
CHECKED: RC
PROJECT NO. #####

REGISTERED PROFESSIONAL ENGINEER ROBERT I. CREEK 59425 CIVIL STATE OF CALIFORNIA

C3.2

####

Last Saved by: Czwernich
Plot Date/Time: 8/31/2026 11:54 AM
Drawing: N:_CDE\Pleasanton\41541 NRHPD Sierra Creek Park\Civil\Const\Plans\Onsite\41541-UT (CIVIL)

PARKING SUMMARY		
DESCRIPTION	REQUIRED	PROVIDED
STANDARD		20
ADA PARKING	2	2
STANDARD ADA		1
VAN ACCESSIBLE	1	1
EVCS (TOTAL)	2	2
EVCS – STANDARD		1
EVCS – ADA	1	1
STANDARD ADA		0
VAN ACCESSIBLE	1	1
EVCS – FUTURE (CAPABLE)	6	6
COMPACT	24 (MAX)	22
MOTORCYCLE	2	2
TOTAL		48

LEGEND

- SIGN
- EV CHARGER LOCATION (FOR REFERENCE ONLY)
- REFLECTIVE "BLUE DOT" FIRE HYDRANT MARKER INSTALLED ADJACENT TO THE HYDRANT 6" OFF CENTERLINE OR MEDIAN WHICH EVER IS CLOSER AS SHOWN
- FIRE HYDRANT
- ACCESSIBLE CURB RAMP
- "STOP" LEGEND PER CITY OF LATHROP DETAIL R-34
- (1) RED CURB PAINT "FIRE LANE NO PARKING" IN 4" TALL WHITE LETTERS TO BE PAINTED ON THE SIDE OF ALL ON-SITE RED CURB
- (2) FIGURE 3B-22(CA), DISABLED PERSONS PARKING SYMBOL, LEGEND, AND RELATED MARKINGS PER CA-MUTCD LATEST EDITION
- (3) EVCS ADA STALLS AND ACCESS AISLE PER CBC 11B-812 AND CBC FIG 11B-812.9
- (4) EVCS MARKING PER FIG 3B-108(CA) PER CA-MUTCD LATEST EDITION
- (5) FUTURE EVCS STALL, CONTRACTOR SHALL MAKE REQUIRED IMPROVEMENTS TO MEET CURRENT ADA STANDARDS AT TIME OF INSTALLATION
- (6) COMPACT STALL MARKING
- (7) MOTORCYCLE PARKING MARKING
- (8) EV CHARGER CLEAR SPACE (30"X48"), SEE CBC 11B-812.10.4 AND CBC FIG 11B-812.9

PAVEMENT MARKING DETAILS

- (7C.02) SECTION 7C.02 (12" YELLOW LINES SPACED 12" TO 60" APART) & FIG.3B-19 PER CA-MUTCD LATEST EDITION.
- (9) DETAIL 4 (4" WHITE LINE W/ PAVEMENT MARKERS) – LANE LINE MARKING PER CA-MUTCD LATEST EDITION.
- TYPE I (10 FT) ARROW PER CA-MUTCD LATEST EDITION
- TYPE IV (R) ARROW PER CA-MUTCD LATEST EDITION
- 3B-22(CA) FIGURE 3B-22 ACCESSIBLE PARKING SYMBOL, LEGEND AND RELATED MARKINGS

ABBREVIATIONS

R1-1	STOP SIGN
R3-5	LEFT (RIGHT) TURN ONLY SIGN
R7-8B	VAN ACCESSIBLE SIGN
R99C(CA)	ACCESSIBLE PARKING SIGN
R100B(CA)	TOW AWAY SIGN, SEE NOTE 2

NOTES:

1. ALL STRIPING, PAVEMENT MARKING, AND SIGNING SHALL CONFIRM TO THE LATEST EDITION OF THE CALIFORNIA MANUAL OF UNIFORM TRAFFIC CONTROL DEVICES.

N

0 10 20 40

SCALE: 1" = 20'

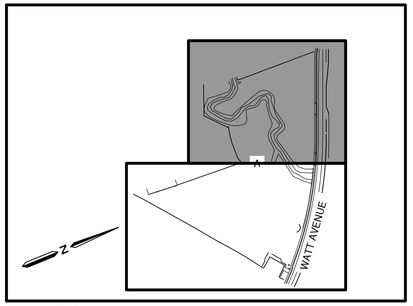

LOCATION MAP

1"=300'

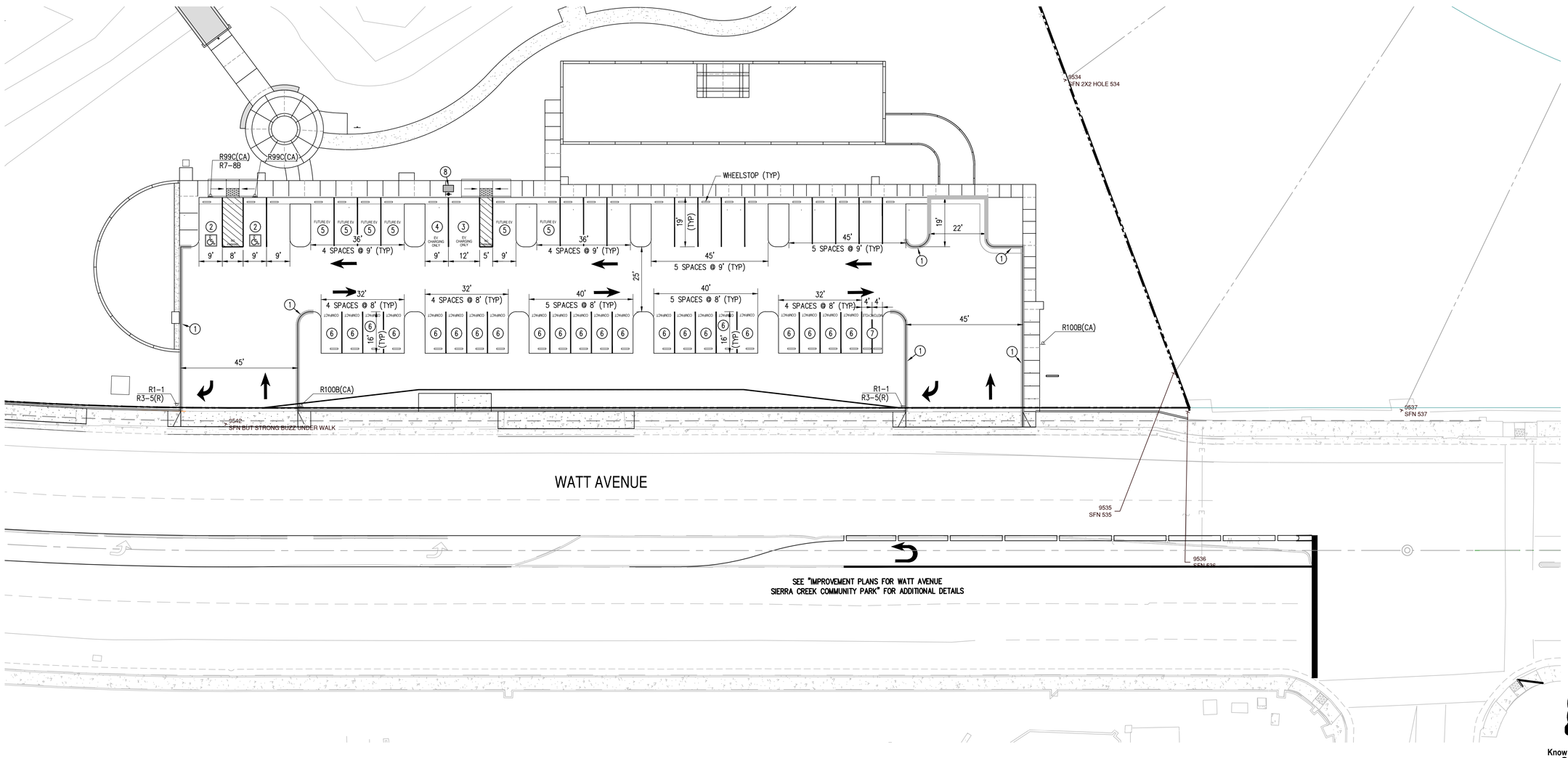

Know what's **below.**
Call before you dig.

Westwood
Westwood Professional Services, Inc.
8200 STONERIDGE MALL ROAD, SUITE 330
PLEASANTON, CA 94588
T: 925.223.8340
wwdesign.com

NO.	DESCRIPTION	DATE	BY	APP. DATE	APP.

ANTELOPE, CALIFORNIA

SIERRA CREEK COMMUNITY PARK
TRAFFIC SIGNING & STRIPING

DATE: 08/31/2026
DRAFTER: JJ
DESIGNER: ZW
CHECKED: RC
PROJECT NO. 41541

REGISTERED PROFESSIONAL ENGINEER ROBERT I. CRAIG 59425 CIVIL STATE OF CALIFORNIA

C4.1

####

Last Saved by: Czwernicki
Plot Date: Tue, 8/31/2026 11:46 AM
Drawing: N:_ODE\Pleasanton\41541 NRHPD Sierra Creek Park\Civil\ConstPlans\Onsite\41541-SS (CIVIL)

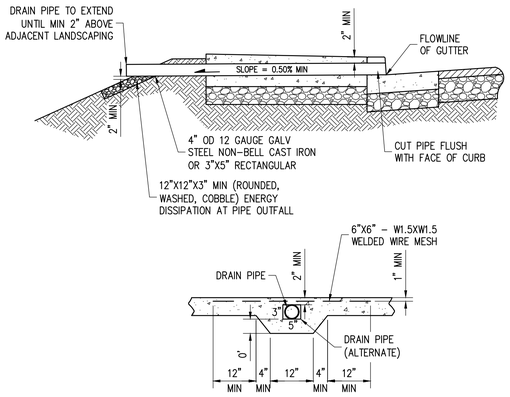

NOTES:
1. PROPERTY OWNER SHALL BE RESPONSIBLE FOR CLEANING AND MAINTAINING PIPE.

A UNDER SIDEWALK DRAIN
NOT TO SCALE

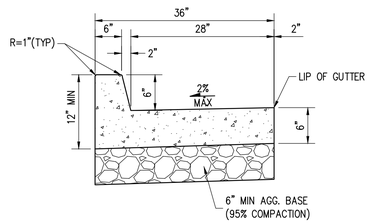

NOTES:
1. SEE COUNTY OF SACRAMENTO SECTION 27-3.01 OF STANDARD CONSTRUCTION SPECIFICATIONS FOR REQUIREMENT FOR EXPANSION JOINTS, WEAKENED PLANE JOINTS AND SCORE MARKS. $\frac{1}{4}$" RADIUS ON EXPOSED EDGES UNLESS NOTED OTHERWISE.

B MODIFIED VERTICAL CURB & GUTTER
NOT TO SCALE

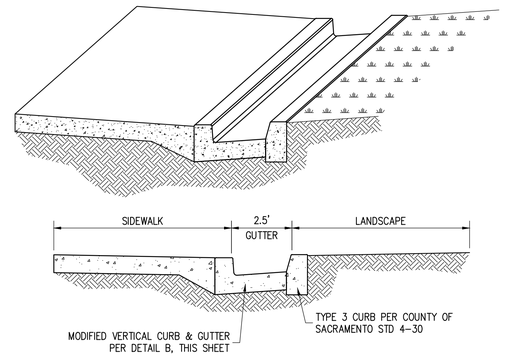

C FLOW THRU CURB
NOT TO SCALE

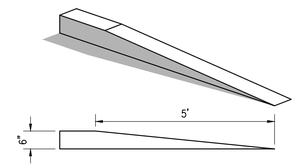

D CURB TRANSITION DETAIL
NOT TO SCALE

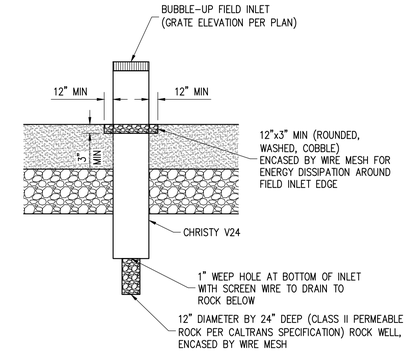

E BUBBLE-UP INLET
NOT TO SCALE

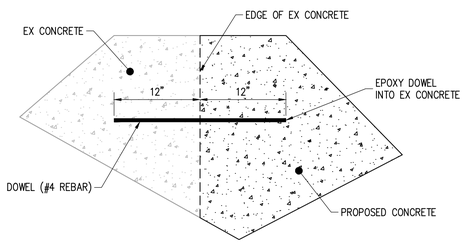

F DOWEL/CONCRETE CONFORMATION
NOT TO SCALE

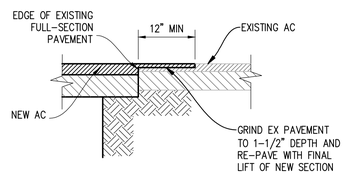

G LAP JOINT DETAIL
NOT TO SCALE

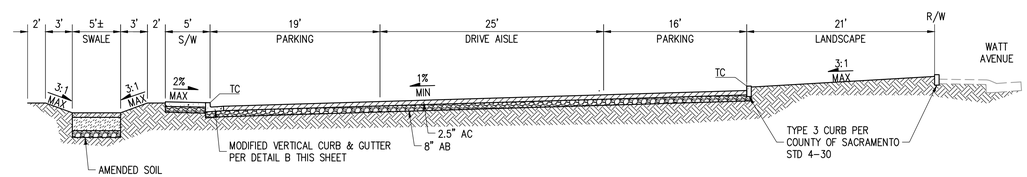

H TYPICAL PARKING LOT CROSS SECTION
NOT TO SCALE

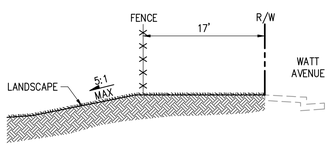

I SECTION I-I
NOT TO SCALE

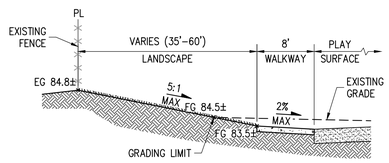

J SECTION J-J
NOT TO SCALE

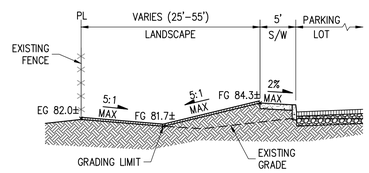

K SECTION K-K
NOT TO SCALE

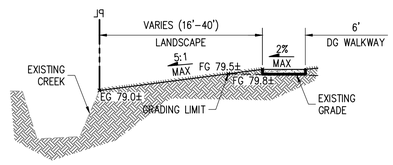

L SECTION L-L
NOT TO SCALE

Know what's **below.**
Call before you dig.

Westwood
Westwood Professional Services, Inc.
8200 STONERIDGE MALL ROAD, SUITE 330
PLEASANTON, CA 94588
T: 925.223.8340
westwoodps.com

NO.	DESCRIPTION	DATE	BY	APP. DATE	APP.

ANTELOPE, CALIFORNIA

SIERRA CREEK COMMUNITY PARK
DETAILS

DATE: 08/31/2026
DRAFTER: JJ
DESIGNER: ZW
CHECKED: RC
PROJECT NO. 41541

REGISTERED PROFESSIONAL ENGINEER ROBERT I CHAN 59425 CIVIL STATE OF CALIFORNIA

C6.1

####

Last Saved by: Czwernich
Plot Date/Time: 01/07/2026 11:46 AM
Drawing: N:_ODE\Pleasanton\41541 NRHPD Sierra Creek Park\Civil\ConstPlans\Orsle\41541-SS (CIVIL)

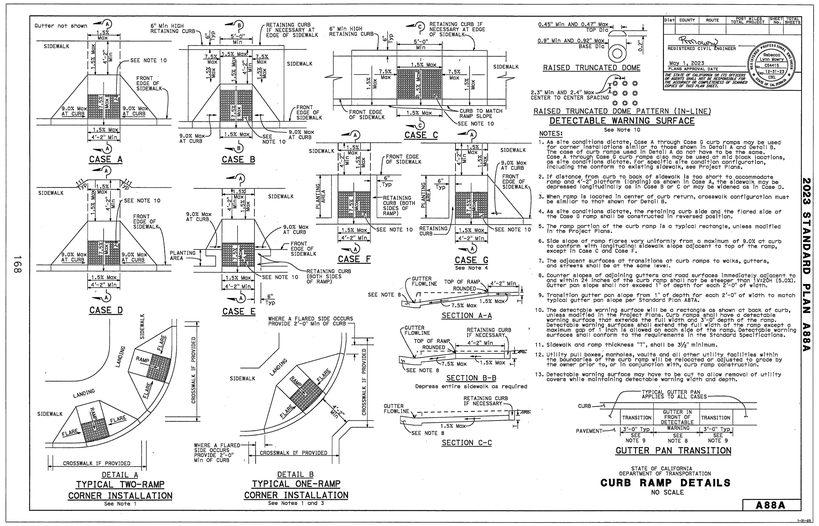

Return to Table of Contents

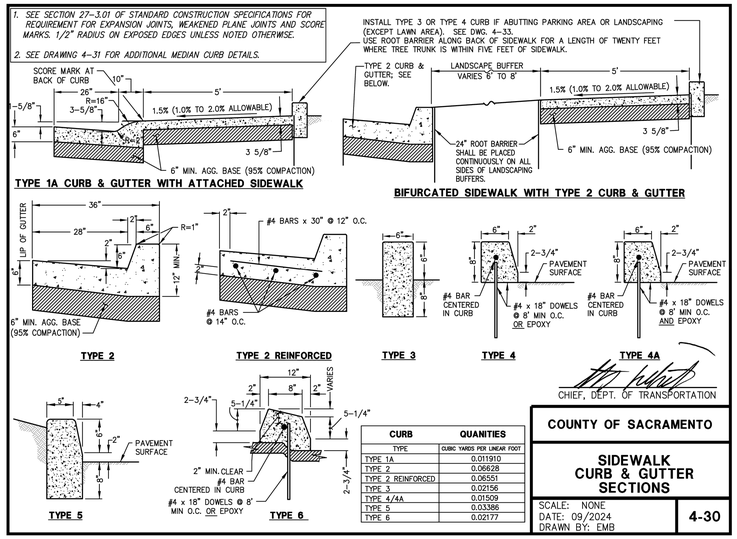

CURB	QUANITIES
TYPE	CUBIC YARDS PER LINEAR FOOT
TYPE 1A	0.011910
TYPE 2	0.06628
TYPE 2 REINFORCED	0.06551
TYPE 3	0.02156
TYPE 4/4A	0.01509
TYPE 5	0.03386
TYPE 6	0.02177

COUNTY OF SACRAMENTO

SIDEWALK CURB & GUTTER SECTIONS

SCALE: NONE
DATE: 09/2024
DRAWN BY: EMB

4-30

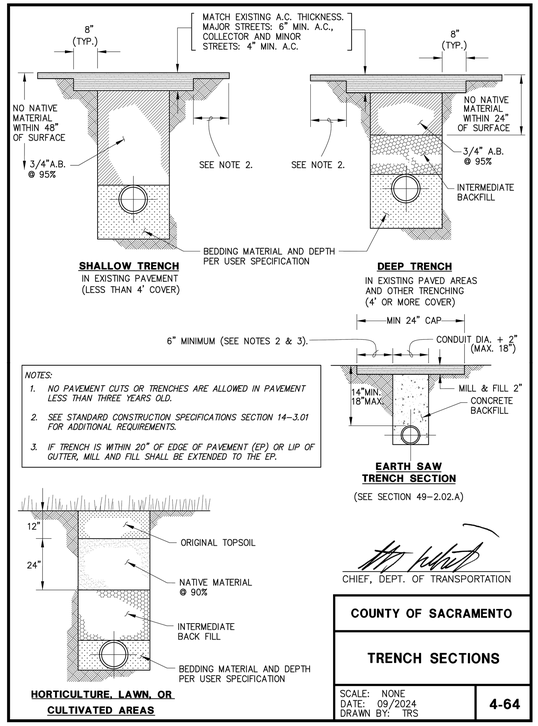

COUNTY OF SACRAMENTO

TRENCH SECTIONS

SCALE: NONE
DATE: 09/2024
DRAWN BY: TRS

4-64

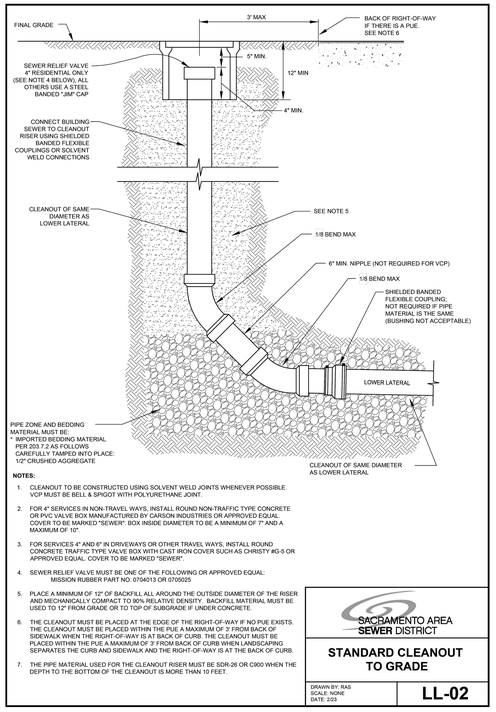

NOTES:

1. CLEANOUT TO BE CONSTRUCTED USING SOLVENT WELD JOINTS WHENEVER POSSIBLE. VCP MUST BE BELL & SPIGOT WITH POLYURETHANE JOINT.
2. FOR 4" SERVICES IN NON-TRAVEL WAYS, INSTALL ROUND NON-TRAFFIC TYPE CONCRETE OR PVC VALVE BOX MANUFACTURED BY CARSON INDUSTRIES OR APPROVED EQUAL. COVER TO BE MARKED "SEWER". BOX INSIDE DIAMETER TO BE A MINIMUM OF 7" AND A MAXIMUM OF 10".
3. FOR SERVICES 4" AND 6" IN DRIVEWAYS OR OTHER TRAVEL WAYS, INSTALL ROUND CONCRETE TRAFFIC TYPE VALVE BOX WITH CAST IRON COVER SUCH AS CHRISTY #G-5 OR APPROVED EQUAL. COVER TO BE MARKED "SEWER".
4. SEWER RELIEF VALVE MUST BE ONE OF THE FOLLOWING OR APPROVED EQUAL: MISSION RUBBER PART NO. 0704013 OR 0705025
5. PLACE A MINIMUM OF 12" OF BACKFILL ALL AROUND THE OUTSIDE DIAMETER OF THE RISER AND MECHANICALLY COMPACT TO 90% RELATIVE DENSITY. BACKFILL MATERIAL MUST BE USED TO 12" FROM GRADE OR TO TOP OF SUBGRADE IF UNDER CONCRETE.
6. THE CLEANOUT MUST BE PLACED AT THE EDGE OF THE RIGHT-OF-WAY IF NO PUE EXISTS. THE CLEANOUT MUST BE PLACED WITHIN THE PUE A MAXIMUM OF 3' FROM BACK OF SIDEWALK WHEN THE RIGHT-OF-WAY IS AT BACK OF CURB. THE CLEANOUT MUST BE PLACED WITHIN THE PUE A MAXIMUM OF 3' FROM BACK OF CURB WHEN LANDSCAPING SEPARATES THE CURB AND SIDEWALK AND THE RIGHT-OF-WAY IS AT THE BACK OF CURB.
7. THE PIPE MATERIAL USED FOR THE CLEANOUT RISER MUST BE SDR-26 OR C900 WHEN THE DEPTH TO THE BOTTOM OF THE CLEANOUT IS MORE THAN 10 FEET.

SACRAMENTO AREA SEWER DISTRICT

STANDARD CLEANOUT TO GRADE

DRAWN BY: RAS
SCALE: NONE
DATE: 2/23

LL-02

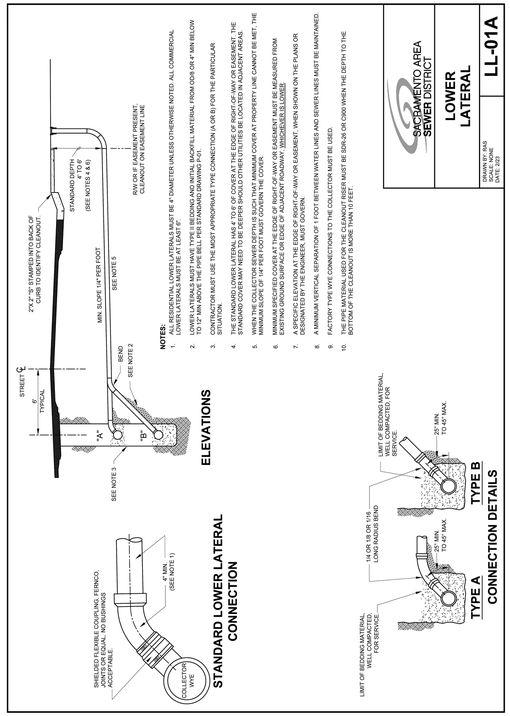

SACRAMENTO AREA SEWER DISTRICT

LOWER LATERAL

DRAWN BY: RAS
SCALE: NONE
DATE: 2/23

LL-01A

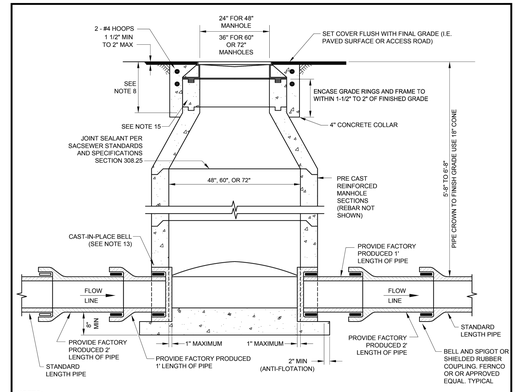

NOTES:

1. CLASS A ASTM C478 CONCRETE MUST BE USED FOR MANHOLE BASES.
2. SPRING LINE OF CAST-IN-PLACE BELL MUST STOP AT INSIDE FACE OF MANHOLE.
3. POURED IN PLACE MANHOLES ARE NOT ALLOWED.
4. JOINTS FOR THE BARREL SECTION WILL BE TONGUE AND GROOVE OR LAP JOINT. ALL LIFTING HOLES MUST BE SEALED WITH NON-SHRINK GROUT.
5. ALL MANHOLE BASES MUST BE PRECAST BASES AND BE PLACED ON 10" MIN. OF 3/4" CRUSHED ROCK PLACED OVER UNDISTURBED MATERIAL. CONNECTION OF THE PIPE TO THE MANHOLE MUST USE A CAST-IN-PLACE BELL. ALL MANHOLE BASES TO INCLUDE AN ANTI-FLOTATION RING PER STANDARD DRAWING MH-05.
6. ANY LOWER LATERAL ENTERING A MANHOLE MUST BE INSTALLED WITH THE INVERT ELEVATION OF THE LOWER LATERAL MATCHING THE CROWN ELEVATION OF THE EXIT SEWER EXCEPT WHEN AN INTERNAL DROP CONNECTION IS USED. FOR MANHOLES AT THE END OF A CUL-DE-SAC OR END OF LINE WITH NO EXTENSION THE INVERT OF ANY LOWER LATERAL MUST BE A MINIMUM OF ONE INCH ABOVE THE INVERT OF THE EXIT PIPE WITH AN INDIVIDUAL SADDLE WITH TRANSITION CHANNEL.
7. ECCENTRIC CONES REQUIRE APPROVAL FROM SACSEWER.
8. MAXIMUM THROAT DEPTH FOR NEW CONSTRUCTION IS 16 INCHES. MAXIMUM THROAT DEPTH FOR ASPHALTIC CONCRETE OVERLAYS IS 18 INCHES.
9. 5'-8" OR LESS MUST USE 18" CONES OR FLAT TOP.
10. PIPE MUST BE PLACED WITH THE BELLS UPSTREAM.
11. ALL SEWER MANHOLES MUST HAVE 24 HOUR ALL WEATHER ACCESS. (I.E. PAVED SURFACE OR ACCESS ROAD).
12. SEE DRAWING MH-05 / MH-06 FOR BASE DETAIL.
13. SANDED MANHOLE ADAPTER MANUFACTURED BY IPEX USA, LLC OR APPROVED EQUAL WITH CLAMP ON WATERSTOP GROUT RING FOR PVC.
14. MANHOLES MUST BE MANUFACTURED BY JENSEN PRECAST, OLDCASTLE INFRASTRUCTURE, OR RINKER UNLESS OTHERWISE APPROVED BY SACSEWER.
15. FOR EASEMENT AREAS OUTSIDE OF ROADWAYS AND VEHICLE TRAFFIC, CRETEX PRO-RING GRADE RINGS MAY BE USED IN LIEU OF CONCRETE GRADE RINGS.

SACRAMENTO AREA SEWER DISTRICT

STANDARD PRECAST 48", 60", OR 72" MANHOLES

DRAWN BY: RAS
SCALE: NONE
DATE: 5/23

MH-03

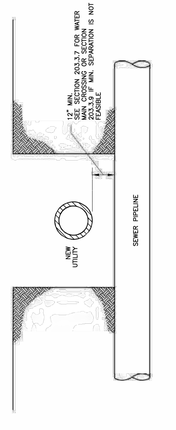

NOTES:

1. ALL SEWER PIPELINES ARE TO BE PROTECTED IN PLACE.
2. ANY NON UTILITY MUST HAVE A MINIMUM OF 12" CLEARANCE FROM ANY SEWER PIPELINE. ANY NON UTILITY CROSSING OVER SEWER PIPELINE MUST HAVE A COMPRESSIBLE MATERIAL (STYROFOAM OR EQUIVALENT) BETWEEN THE LINES.

SACRAMENTO AREA SEWER DISTRICT

UTILITY CROSSING

DRAWN BY: RAS
SCALE: NONE
DATE: 5/23

P-08

Westwood
Westwood Professional Services, Inc.
8200 STONERIDGE MALL ROAD, SUITE 300
PLEASANTON, CA 94588
T: 925.223.8340
westwoodps.com

NO.	DESCRIPTION	DATE	BY	APP.	APP. DATE

ANTELOPE, CALIFORNIA

SIERRA CREEK COMMUNITY PARK

DETAILS

DATE: 08/31/2026
DRAFTER: JJ
DESIGNER: ZW
CHECKED: RC
PROJECT NO. 41541

REGISTERED PROFESSIONAL ENGINEER ROBERT I CHEN 59425 CIVIL STATE OF CALIFORNIA

C6.2

####

811 Know what's below. Call before you dig.

List Saved by: Czwernicki
Last Updated: 8/31/2026 11:47 AM
Drawing: N:_ODE\Pleasanton\41541 NRHPD Sierra Creek Park\Civil\Plans\Onsite\41541-SS (CIVIL)

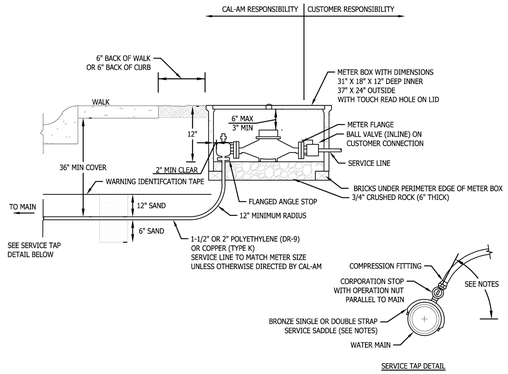

SERVICE TAP DETAIL

NOTES:
1. METER BOXES SHALL NOT BE LOCATED IN DRIVEWAYS, AND SHALL BE 2-FOOT MINIMUM OUTSIDE CURB RETURNS AND ACCESSIBLE WALKS. LOCATE NEW WATER METER BOX AS SHOWN ON DRAWING OR AS DIRECTED BY CAL-AM REPRESENTATIVE. TYPICAL LOCATION IS 6" BEHIND BACK OF SIDEWALK OR 6" BEHIND BACK OF CURB IF SIDEWALK IS NOT PROPOSED.
2. METER BOX SHALL BE LEVEL AND FLUSH WITH FINISHED GRADE.
3. CONTRACTOR TO PROVIDE A FLANGED METER SPACER :
   1-1/2" SERVICE 13" METER SPACER
   2" SERVICE 17-1/4" METER SPACER
4. CAL-AM WILL PROVIDE AND INSTALL METER.
5. WHEN REPLACING COMPOUND METERS, ANY BYPASS PIPING SHALL BE REMOVED AT CAL-AM DISCRETION.
6. INSTALL BRONZE DOUBLE STRAP SERVICE SADDLE ON ALL ACP AND DIP MAINS.
7. INSTALL BRONZE SINGLE STRAP SERVICE SADDLE ON ALL PVC MAINS.
8. NO GALVANIZED PIPING MATERIALS SHALL BE ALLOWED.
9. SERVICE SHALL BE INSTALLED AT 0 DEGREES (HORIZONTAL). SERVICE INSTALLATION AT 45 DEGREES UPON DISCRETION OF CAL-AM.
10. SEE PIPE TRENCH AND BACKFILL STANDARD DRAWING CAW-ND-W102.
11. SEE WARNING / IDENTIFICATION TAPE AND TRACER WIRE STANDARD DRAWING CAW-ND-W103.
12. SEE REDUCED PRESSURE (RP) PRINCIPLE BACKFLOW ASSEMBLY STANDARD DRAWING CAW-ND-W204.
14. SEE WATER SERVICE MINIMUM SEPARATION STANDARD DRAWING CAW-ND-W206.

SEE CAL-AM NORTHERN DIVISION SPECIFICATIONS FOR APPROVED MATERIALS LIST

CALIFORNIA AMERICAN WATER

COMMITTEE APPROVAL 04/12/2023

1.5-INCH AND 2-INCH SERVICE

CALIFORNIA AMERICAN WATER
NORTHERN DIVISION

STANDARD DRAWING NUMBER
CAW-ND-W202

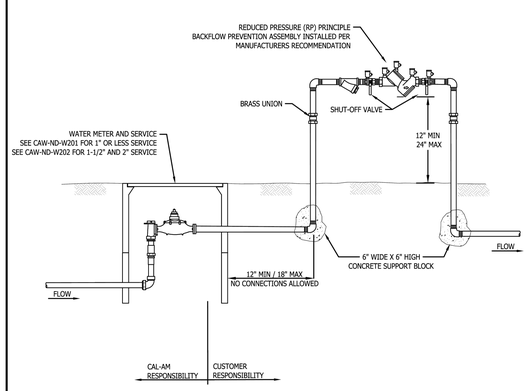

NOTES:
1. POINT OF SERVICE SHALL BE BACK OF METER.
2. BACKFLOW PREVENTION ASSEMBLIES SHALL BE INSTALLED ABOVE GROUND IN HORIZONTAL AND LEVEL POSITION. THE ASSEMBLY SHALL BE LOCATED ON THE CUSTOMER'S SIDE AND NO FURTHER THAN TWELVE (12) INCHES, WITH A MAXIMUM OF EIGHTEEN (18) INCHES, FROM THE POINT OF SERVICE OR THE METER, UNLESS OTHERWISE APPROVED BY CAL-AM.
3. REDUCED PRESSURE (RP) BACKFLOW PREVENTION ASSEMBLIES MUST BE CONNECTED AND TESTED PRIOR TO BEING PLACED INTO SERVICE.
4. LIST OF USC APPROVED BACKFLOW PREVENTION ASSEMBLIES AND CERTIFIED BACKFLOW PREVENTION ASSEMBLY TESTERS ARE AVAILABLE AT LOCAL CAL-AM OFFICE.
5. NO OUTLET, TAP, TEE OR CONNECTION BETWEEN THE WATER MAIN AND BACKFLOW PREVENTER IS ALLOWED.
6. ALL ABOVE GROUND PIPING, UNIONS, ELBOWS, AND NIPPLES SHALL BE SOLDERED OR THREADED BRASS.
7. CONCRETE PAD IS RECOMMENDED IF ASSEMBLY IS PLACED WITHIN A PROTECTIVE ENCLOSURE.
8. FREEZE PROTECTION IS RECOMMENDED IN LOCATIONS WITH FREEZING TEMPERATURES.
9. NO GALVANIZED PIPING MATERIALS SHALL BE ALLOWED.

SEE CAL-AM NORTHERN DIVISION SPECIFICATIONS FOR APPROVED MATERIALS LIST

CALIFORNIA AMERICAN WATER

COMMITTEE APPROVAL 09/28/2022

2-INCH AND LESS RP BACKFLOW PREVENTION DEVICE

CALIFORNIA AMERICAN WATER
NORTHERN DIVISION

STANDARD DRAWING NUMBER
CAW-ND-W204

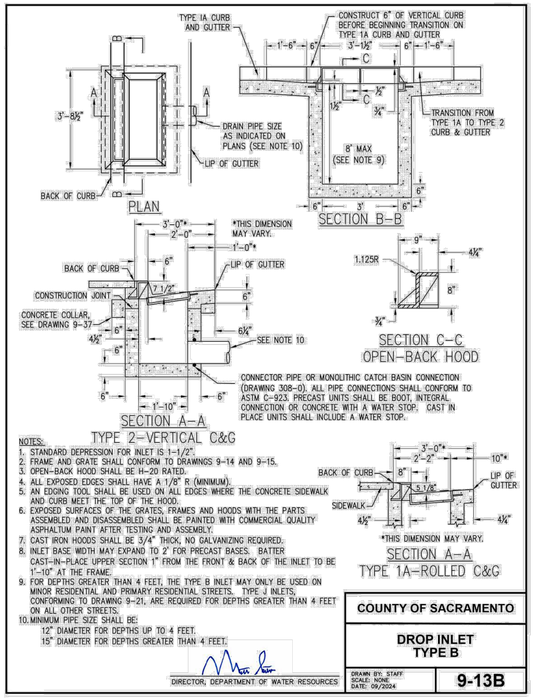

NOTES:
1. STANDARD DEPRESSION FOR INLET IS 1-1/2".
2. FRAME AND GRATE SHALL CONFORM TO DRAWINGS 9–14 AND 9–15.
3. OPEN–BACK HOOD SHALL BE H–20 RATED.
4. ALL EXPOSED EDGES SHALL HAVE A 1/8" R (MINIMUM).
5. AN EDGING TOOL SHALL BE USED ON ALL EDGES WHERE THE CONCRETE SIDEWALK AND CURB MEET THE TOP OF THE HOOD.
6. EXPOSED SURFACES OF THE GRATES, FRAMES AND HOODS WITH THE PARTS ASSEMBLED AND DISASSEMBLED SHALL BE PAINTED WITH COMMERCIAL QUALITY ASPHALTUM PAINT AFTER TESTING AND ASSEMBLY.
7. CAST IRON HOODS SHALL BE 3/4" THICK, NO GALVANIZING REQUIRED.
8. INLET BASE WIDTH MAY EXPAND TO 2' FOR PRECAST BASES. BATTER CAST–IN–PLACE UPPER SECTION 1" FROM THE FRONT & BACK OF THE INLET TO BE 1'–10" AT THE FRAME.
9. FOR DEPTHS GREATER THAN 4 FEET, THE TYPE B INLET MAY ONLY BE USED ON MINOR RESIDENTIAL AND PRIMARY RESIDENTIAL STREETS. TYPE J INLETS, CONFORMING TO DRAWING 9–21, ARE REQUIRED FOR DEPTHS GREATER THAN 4 FEET ON ALL OTHER STREETS.
10. MINIMUM PIPE SIZE SHALL BE:
    12" DIAMETER FOR DEPTHS UP TO 4 FEET.
    15" DIAMETER FOR DEPTHS GREATER THAN 4 FEET.

DIRECTOR, DEPARTMENT OF WATER RESOURCES

COUNTY OF SACRAMENTO

DROP INLET
TYPE B

DRAWN BY: STAFF
SCALE: NONE
DATE: 09/2024

9-13B

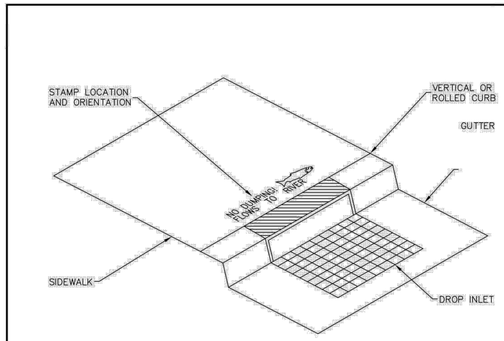

NOTES:
1. MESSAGE AND SYMBOL SHALL BE AS SHOWN ON SHEET 2 OR AS APPROVED BY THE AGENCY.
2. LETTERS SHALL BE 1.5 INCHES (38MM) IN HEIGHT. THE MESSAGE SHALL BE CENTERED ON THE BACK OF THE INLET. DIMENSIONS OF STORM DRAIN SHALL NOT EXCEED 12"X33".
3. CONCRETE SHALL BE STAMPED IN SUCH A WAY AS TO PROVIDE FOR A CLEAR AND LEGIBLE IMAGE. (APPROXIMATE DEPTH OF .25 INCH OR 6MM.)
4. ALL STAMPS SHALL BE APPROVED BY THE AGENCY BEFORE BEING USED.
5. FOR DROP INLETS AND CATCH BASINS WITH PRECAST TOPS, STEEL STORM DRAIN MARKERS MAY REPLACE THE CONCRETE STAMP. THE MARKER SHALL BE EMBOSSED STAINLESS STEEL AND INSTALLED WITH 4 RIVET FASTENER AND ADHESIVE. THE MARKERS SHALL BE AS SHOWN ON SHEET 2 OR AS APPROVED BY THE AGENCY.

DIRECTOR, DEPARTMENT OF WATER RESOURCES

COUNTY OF SACRAMENTO

STORMWATER QUALITY
DROP INLET & CATCH
BASIN CONCRETE STAMP

DRAWN BY: STAFF
SCALE: NONE
DATE: 09/2024

9-41
SHEET 1 OF 2

DIMENSIONS MAY VARY AMONG THE STAMP DESIGNS SHOWN BELOW, BUT SHALL NOT EXCEED THE MAXIMUM DIMENSIONS.

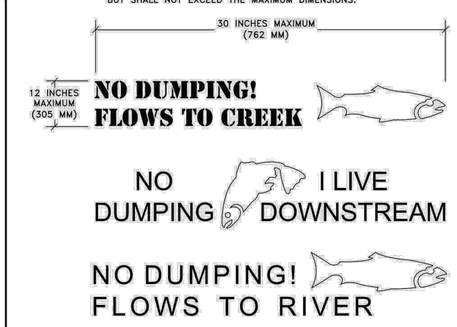

STAMP MESSAGES AND SYMBOLS

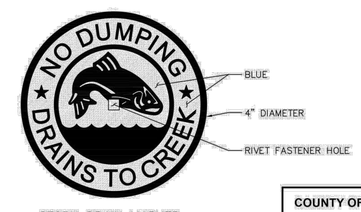

STORM DRAIN MARKER

DIRECTOR, DEPARTMENT OF WATER RESOURCES

COUNTY OF SACRAMENTO

STORMWATER QUALITY
DROP INLET & CATCH
BASIN CONCRETE STAMP

DRAWN BY: STAFF
SCALE: NONE
DATE: 09/2024

9-41
SHEET 2 OF 2

811
Know what's **below.**
Call before you dig.

Westwood
Westwood Professional Services, Inc.
8200 STONERIDGE MALL ROAD, SUITE 330
PLEASANTON, CA 94588
T: 925.223.8340
www.westwoodps.com

NO.	DESCRIPTION	DATE	BY	APP. DATE	APP.

ANTELOPE, CALIFORNIA

SIERRA CREEK COMMUNITY PARK
DETAILS

DATE: 08/31/2026
DRAFTER: JJ
DESIGNER: ZW
CHECKED: RC
PROJECT NO.
41541

REGISTERED PROFESSIONAL ENGINEER
ROBERT I. CREAR
59425
CIVIL
STATE OF CALIFORNIA

C6.3

####

Last Saved by: Czwernich
Plot Scale: 1:1 Plot Date/Time: 8/31/2026 11:48 AM
Drawing: N:_CDE\Pleasanton\41541 NRHPD Sierra Creek Park\Civil\ConstPlans\Onsite\41541-SS (CIVIL)

PEZZONI ENGINEERING, INC.
CONSULTING ELECTRICAL ENGINEERS
1150 9TH Street Suite #1415 Modesto, CA 95354
PHONE: 209 . 554 . 4602
HTTP://WWW.PEZENGR.COM

PEZZONI ENGINEERING, INC. © Copyrighted 2026

GENERAL POWER LEGEND

- CONCRETE PULL BOX –SIZE AS NOTED – LIDS AS NOTED 'P' POWER, 'S' SIGNAL, 'F' FIRE ALARM & 'D' DATA; '–T' DENOTES TRAFFIC LID
- CONDUIT –SURFACE MOUNTED OR ABOVE CEILING –EMT WITH COMPRESSION FITTING UNLESS NOTED ON PLANS
- CONDUIT –CONCEALED BELOW FLOOR IN EMT OR UNDERGROUND IN PVC SCH 40 WITH IMC ELBOWS
- HOMERUN TO PERSPECTIVE PANEL OR CABINET –BRANCH CIRCUIT WITH OUT FURTHER DESIGNATION IS A #12 WIRE CIRCUIT
- FLEX
- TERMINAL CABINET
- PANEL BOARD –SEE SCHEDULE
- MOTOR/EXHAUST FAN –N.I.E.S. –CONNECT AS REQUIRED
- GFCI DUPLEX RECEPTACLE +15" A.F.F. FROM BOTTOM OF BOX U.O.N.
- EQUIPMENT AND/OR CONTROL CONNECTION POINT. MAKE CONNECTION TO EQUIPMENT AS REQUIRED.
- JUNCTION BOX – SINGLE GANG BOX
- FUSED DISCONNECT SWITCH –SIZE AS NOTED –30A. SHOWN
- $HP MOTOR RATED DISCONNECT SWITCH
- XX FIXTURE IDENTIFICATION –LETTER INDICATES FIXTURE TYPE –NUMERAL INDICATES LAMP QUANTITY AND WATTAGE

GENERAL ELECTRICAL NOTES

1. PROVIDE ALL LABOR, MATERIALS, TOOLS, PLANT EQUIPMENT, TRANSPORTATION AND ALL PERFORM ALL OPERATIONS NECESSARY FOR THE PROPER EXECUTION AND COMPLETION OF ALL ELECTRICAL WORK REQUIRED FOR THE COMPLETE AND OPERATING SYSTEMS AS OUTLINED WITHIN THE SCOPE OF WORK.
2. UNDERWRITERS LABORATORIES, INC., SHALL MEET THEIR REQUIREMENTS AND SHALL BEAR THEIR LABEL WHEREVER STANDARDS HAVE BEEN ESTABLISHED AND LABEL SERVICE IS REGULARLY FURNISHED BY THAT AGENCY.
3. THE SIZE AND LOCATIONS OF EQUIPMENT ARE SHOWN TO SCALE WHEREVER POSSIBLE, CONTRACTOR SHALL MAKE USE OF ALL DATA IN ALL CONTRACT DOCUMENTS AND VERIFY THIS INFORMATION AT THE SITE.
4. CONDUCTORS SHALL BE COPPER CONDUCTORS TYPE AS NOTED ON CONSTRUCTION DOCUMENTS.
5. ALL REQUIRED CONDUITS SHALL BE PROVIDED BY E.C. LOW VOLTAGE WIRING SHALL BE BY MECHANICAL CONTRACTOR, LINE VOLTAGE (50 VOLTS OR MORE) SHALL BE BY ELECTRICAL CONTRACTOR.
6. DO NOT PENETRATE STRUCTURAL MEMBERS, INCLUDING BEAMS, COLUMNS, OR FOOTINGS, WITHOUT PRIOR WRITTEN CONSENT OF THE DISTRICT'S STRUCTURAL ENGINEER. SHOULD IT BECOME NECESSARY TO PENETRATE SUCH MEMBERS, NOTIFY THE DISTRICT IN WRITING WITHOUT DELAY, PRIOR TO PROCEEDING WITH CONSTRUCTION AROUND SUCH MEMBERS.
7. ALL ELECTRICAL WORK SHALL CONFORM WITH THE 2022 CALIF. ELECTRICAL CODE CALIFORNIA TITLE 17, 19 & 24 ALONG WITH N.F.P.A. STANDARDS AND THE STATE FIRE MARSHAL'S REQUIREMENTS.
8. ALL WORK TO BE IN ACCORDANCE WITH REQUIREMENTS OF STATE & GOVERNING LOCAL FIRE CODES AND BUILDING CODES.
9. WHERE EXISTING CONSTRUCTION IS CUT, DAMAGED, OR REMODELED, PATCH WITH MATERIALS TO MATCH IN KIND, QUALITY, AND PERFORMANCE.
10. CONTRACTOR SHALL ASSUME SOLE RESPONSIBILITY FOR SAFETY OF ALL PERSONS ON OR ABOUT THE CONSTRUCTION SITE, IN ACCORDANCE WITH APPLICABLE LAWS AND CODES. GUARD ALL HAZARDS IN ACCORDANCE WITH THE SAFETY PROVISIONS OF THE LATEST MANUAL OF ACCIDENT PREVENTION PUBLISHED BY THE ASSOCIATED GENERAL CONTRACTORS OF AMERICA.
11. CLEAN ALL EXPOSED SURFACES AND NEW EQUIPMENT AFTER COMPLETION.
12. OPERATED DEVICES SUCH AS, BUT NOT LIMITED TO, TELE/DATA OUTLETS, RECEPTACLE OUTLETS AND LIGHT SWITCHES INSTALLED IN AREAS NOT RESTRICTED TO AUTHORIZED MAINTENANCE PERSONAL SHALL BE MOUNTED AT A MINIMUM OF +15" AFF., AS MEASURED FROM THE BOTTOM OF THE DEVICE OUTLET BOX, AND MAXIMUM OF +48" AFF., AS MEASURED FROM THE TOP OF THE DEVICE OUTLET BOX.
13. ALL CHANGE ORDER PROPOSALS AND CHANGE ORDERS, BOTH ADDITIVE AND DEDUCTIVE, SHALL BE BASED UPON AND BE ACCOMPANIED BY A DETAILED MATERIALS AND LABOR BREAKDOWN FOR EACH SPECIFIC TASK AND/OR ITEM. THE BREAKDOWN SHALL INCLUDE ACTUAL MATERIALS COSTS PLUS OVERHEAD AND PROFIT, AS WELL AS LABOR UNITS BASE UPON THE MOST RECENT NECA MANUAL OF LABOR UNITS (NECA INDEX #4090) OR EQUIVALENT PUBLICATION FOR EACH SPECIFIC TASK AND ITEM. LABOR COSTS SHALL BE COMPUTED AS OUTLINED WITHIN THE GENERAL CONDITIONS, BASED UPON THE NECA LABOR TABLES FOR EACH TASK REQUIRED. MATERIALS COSTS SHALL INCLUDE ACTUAL CONTRACTOR INVOICE PLUS NO MORE THAN 15% MARKUP. THE OWNER AND CONTRACTOR AGREE TO THE ABOVE CHANGE ORDER COST PROCEDURE, FOR BOTH ADDITIVE AND DEDUCTIVE CHANGE ORDERS.
14. ALL PERSONNEL WORKING WITH ENERGIZED EQUIPMENT WITHIN THE RESTRICTED ZONE PER NFPA–70E SHALL COMPLY WITH ALL NFPA–70E AND OSHA REQUIREMENTS AND BE ARC FLASH SAFETY CERTIFIED.
15. CONDUITS FOR ELECTRICAL OR OTHER UTILTIES SHALL BE LOCATED SO AS TO NOT CONFLICT WITH REQUIRED TREE LOCATIONS FOR STREETS AND PARKING LOTS.

ELECTRICAL COMPLIANCE NOTES

THE INTENT OF THE DRAWINGS AND SPECIFICATION IS TO CONSTRUCT THE PROPOSED BUILDING IN ACCORDANCE WITH TITLE 24, CALIFORNIA CODE OF REGULATIONS. ALL WORK PERFORMED UNDER THIS CONTRACT SHALL CONFORM TO THE FOLLOWING CODES AND REGULATIONS AS APPLICABLE:

2022 CALIFORNIA ADMINISTRATIVE CODE (CAC)
PART 1, TITLE 24, CALIFORNIA CODE OF REGULATIONS (CCR)
2022 CALIFORNIA BUILDING CODE (CBC)
PART 2, TITLE 24, CCR
BASED ON THE 2021 INTERNATIONAL BUILDING CODE (IBC)
2022 CALIFORNIA ELECTRICAL CODE (CEC)
PART 3, TITLE 24, CCR
BASED ON THE 2020 NATIONAL ELECTRICAL CODE (NEC)
2022 CALIFORNIA MECHANICAL CODE (CMC)
PART 4, TITLE 24, CCR
BASED ON THE 2021 UNIFORM MECHANICAL CODE (UMC)
2022 CALIFORNIA PLUMBING CODE (CPC)
PART 5, TITLE 24, CCR
BASED ON THE 2021 UNIFORM PLUMBING CODE (UPC)
2022 CALIFORNIA FIRE CODE (CFC)
PART 9, TITLE 24, CCR
BASED ON THE 2021 INTERNATIONAL FIRE CODE (IFC)
2022 NFPA 72, NATIONAL FIRE ALARM & SIGNALING CODE
w/ CALIFORNIA AMENDMENTS.

UNLESS OTHERWISE STATED, IT IS INTENDED THAT THE ABOVE CODES AND REGULATIONS REFER TO THE LATEST EDITION OR REVISION IN EFFECT ON THE DATE OF THE CONTRACT. NOTHING ON THE DRAWING IS TO BE CONSTRUED AS REQUIRING OR PERMITTING WORK THAT IS CONTRARY TO THE ABOVE LISTED CODES AND REGULATIONS, OR OTHER LOCAL, STATE OR FEDERAL CODES OR REGULATIONS WHICH MAY BE APPLICABLE.

ELECTRICAL ABBREVIATIONS

Δ	DELTA CONNECTED
Y	WYE CONNECTED
0	PHASE
A	AMPERES
AC	ALTERNATING CURRENT
ACT	ABOVE COUNTERTOP/BACKSPLASH
AFF	ABOVE FINISHED FLOOR
AL	ALUMINUM
APPROX	APPROXIMATE
AUTO	AUTOMATIC
AUX	AUXILIARY
ALT	ALTERNATE
AWG	AMERICAN WIRE GAUGE
B	BARE
BC	BARE COPPER GROUND
BKBD	BACKBOARD
BRKR	BREAKER
BLDG	BUILDING
C	CONDUIT OR CONTRACTOR
CAB	CABINET
CATV	CABLE TELEVISION
CKT	CIRCUIT
CLG	CEILING
COMM	COMMUNICATION
CONN	CONNECT
CONT	CONTINUATION OR CONTINUED
COORD	COORDINATE
CR	CONTROL RELAY
CT	CURRENT TRANSFORMER
CU	COPPER
DC	DIRECT CURRENT
DISC	DISCONNECT
DIST	DISTRIBUTION
(E)	EXISTING
EC	ELECTRICAL CONTRACTOR
EL, ELEV	ELEVATION
ELECT	ELECTRICAL
EMT	ELECTRICAL METALLIC TUBING
EOL	END OF LINE
ENCL	ENCLOSURE
EP	EXPLOSION PROOF
EQUIP	EQUIPMENT
ETC	ET CETERA
EVAP	EVAPORATOR
(F)	FUTURE
FA	FIRE ALARM
FACP	FIRE ALARM CONTROL PANEL
FLA	FULL LOAD AMPS
FLEX	FLEXIBLE
FLUOR	FLUORESCENT
FS	FLOW SWITCH
GALV	GALVANIZED
GND	GROUND
GC	GENERAL CONTRACTOR
HI	HIGH
HV	HIGH VOLTAGE
HVAC	HEATING, VENTILATION, AIR CONDITIONING
IDF	INTERMEDIATE DISTRIBUTION FRAME
INCAN	INCANDESCENT
INST	INSTANTANEOUS
KV	KILOVOLTS
KVA	KILOVOLT AMPERES
KW	KILOWATTS
LB	ELBOW
LF	LINEAR FEET
LV	LOW VOLTAGE
M	MOTOR
MAX	MAXIMUM
MCA	MINIMUM CIRCUIT AMPS
MCC	MOTOR CONTROL CENTER
MCM	THOUSAND CIRCULAR MILLS
MECH	MECHANICAL
MFG	MANUFACTURER
MIN	MINIMUM
MPOE	MAIN POINT OF ENTRY
MSB	MAIN SWITCHBOARD
N	NEUTRAL
(N)	NEW
NA	NON–AUTOMATIC
NAC	NOTIFICATION APPLIANCE CIRCUIT
NC	NORMALLY CLOSED
NL	NIGHT LIGHT
OC	ON CENTER
OH	OVERHEAD
OL	THERMAL OVERLOAD RELAY
OT	OVER TEMPERATURE
OSHPD	OFFICE OF STATEWIDE HEALTH PLANNING AND DEVELOPMENT
PA	PUBLIC ADDRESS
PB	PULL BOX
PNL	PANEL
PH	PHASE
PRI	PRIMARY
PS	PRESSURE SWITCH
PWR	POWER
(R)	REMOVE(D)
RA	REMOTE ANNUNCIATOR
REQD	REQUIRED
REQMTS	REQUIREMENTS
RGP	REDUNDANT GROUND PATH
RM	ROOM
RECP	RECEPTACLE
SCH	SCHEDULE
SEC	SECONDS, SECONDARY
SIG	SIGNAL
SPECS	SPECIFICATIONS
SW	SWITCH
SWD	SWITCHED
SP	SPARE
STD	STANDARD
STR	STRANDED
SWBD	SWITCHBOARD
TEL	TELEPHONE
TEMP	TEMPERATURE
TH	THERMOSTAT
TRANSF	TRANSFORMER
TYP	TYPICAL
TSP	TWISTED SHIELDED PAIR
UG	UNDERGROUND
UNO	UNLESS NOTED OTHERWISE
V	VOLTS
VA	VOLT AMPS
VFD	VARIABLE FREQUENCY DRIVE
VM	VOLT METER
W/	WITH
W/O	WITHOUT
WP	WEATHERPROOF
WHD	WATT HOUR DEMAND METER
WM	WATT METER
WH	WATER HEATER
XFMER	TRANSFORMER
(XR)	REMOVE AND RELOCATE(D)

811 Know what's below. Call before you dig.

Westwood
Westwood Professional Services, Inc.
8200 STONERIDGE MALL ROAD, SUITE 330
PLEASANTON, CA 94588
T: 925.223.8340
westwoodps.com

NO.	DESCRIPTION	DATE	BY	APP. DATE	APP.

NHRPD SIERRA CREEK PARK
7781 WATT AVE, ANTELOPE
GENERAL NOTES, ABBREVIATIONS AND ELECTRICAL SYMBOLS

DATE: 08/14/2025
DRAFTER: CCM
DESIGNER: KLP
CHECKED: KLP
PROJECT NO.

REGISTERED PROFESSIONAL ENGINEER KEVIN L. PEZZONI NO. 16268 EXP. 12/31 ELECTRICAL STATE OF CALIFORNIA

EO.1

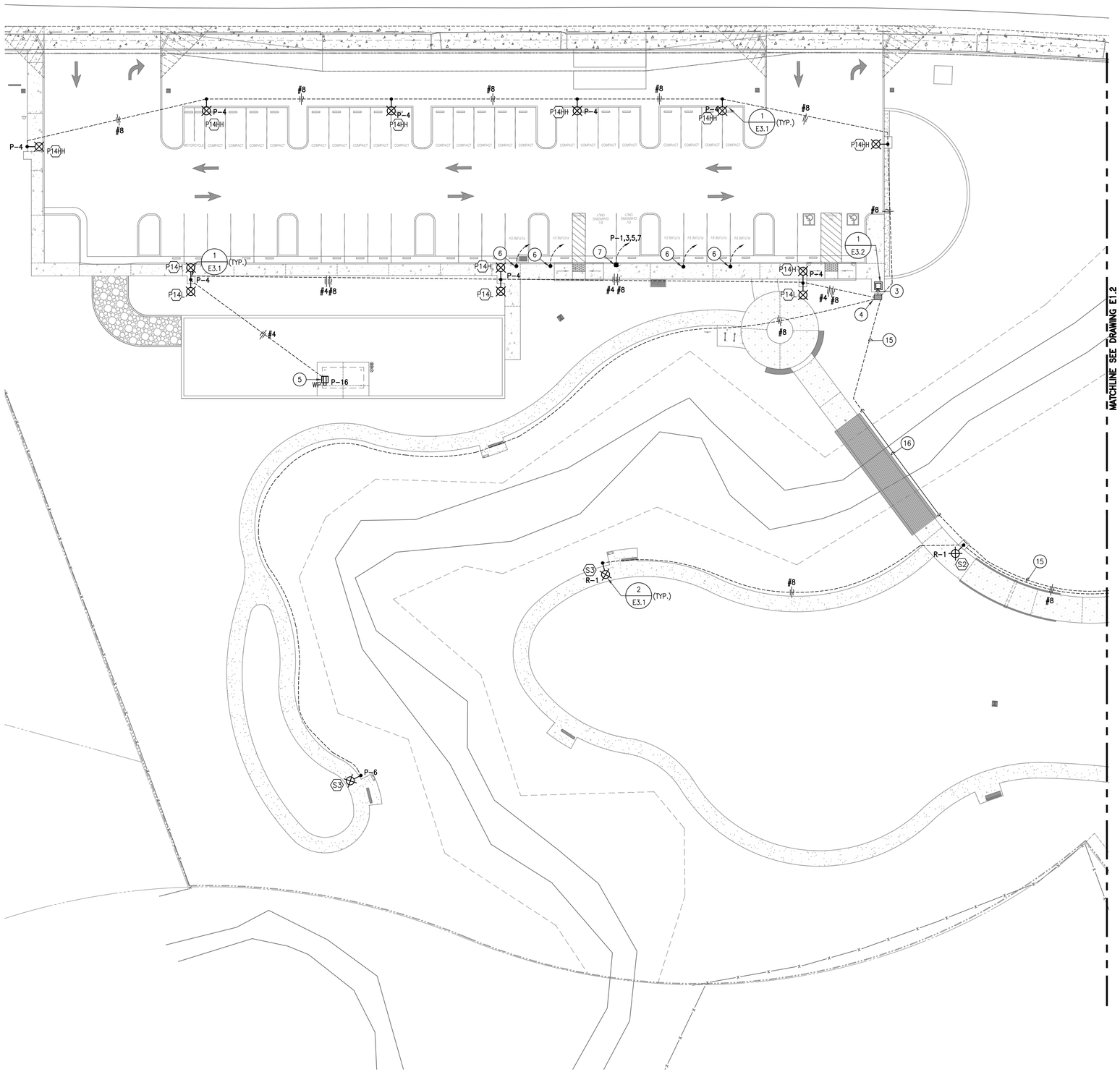

1 PARTIAL SITE PLAN ELECTRICAL

SCALE: 1"=20'-0"

PLAN NOTES:

1. (N) SMUD XFMER PAD W/BOLLARD PROTECTION PER SMUD REQMTS. –INSTALL (N) 4" C. PRIMARY PER SMUD DRAWINGS.
2. (N) 3"C. W/FEEDER PER SMUD REQMTS. FOR SECONDARY FEEDER.
3. (N) 1–3" & 5–2"C. PATHWAYS FROM PULLBOX INTO PEDESTAL.
4. (N) N36 POWER PULLBOX PER DETAIL 5/E4.1.
5. (N) GFCI RECEPTACLE COORDINATE EXACT LOCATION W/CITY –INSTALL W/1" RMC RISER INTO A FD BOX.
6. (N) 2" C.O. FOR (F) EV CHARGER –ROUTE TO (N) N36 PULLBOX (NOTE #4) –INSTALL CONDUIT STUB PER DETAIL 4/E4.1.
7. (N) DUAL 7.2KW –208V –1PH EV PEDESTAL CHARGER SEE DETAIL 3/E3.1 –INSTALL (N) 2"C. W/4 #6 THWN CU & #10 CU GND VIA PULLBOX (NOTE #4).
8. CONNECT (N) BLDG PANEL (100A –120/240V –1PH –3W) FURNISHED BY MFR. –INSTALL (5X) (N) 20A–1P BREAKERS WITHIN (E) SPACES –LABEL AS "LTG PATHWAYS NORTH ", "LTG PATHWAYS PLAZA ", "LTG PATHWAYS SOUTH ", "RECP AMP "& "RECP AMP".
9. (N) 2"C. W/BLDG FEEDER PER SINGLE LINE DIAGRAM.
10. COORDINATE ROUTING OF CONDUIT ALONG UNDERSIDE OF BRIDGE –TRANSITION TO RMC PRIOR TO PENETRATING THE ABATEMENT ON EITHER END.
11. (N) N36 POWER PULLBOX PER DETAIL 5/E4.1.
12. (N) 3–2"C. PATHWAYS FROM PULLBOX INTO BLDG. PANEL.
13. (N) GFCI RECEPTACLE COORDINATE ROUTING WITHIN SHADE. STRUCTURE COLUMN.
14. (N) IRRIGATION CONTROLLER LOCATION –COORD & ROUTE (N) CKT FROM PNL. "R".
15. (N) 3" C. W/PEDESTAL "P" FEEDER PER SINGLE LINE DIAGRAM.
16. TRANSITION TO RMC AT BRIDGE WERE EXPOSED.

PEZZONI ENGINEERING, INC.
CONSULTING ELECTRICAL ENGINEERS
1150 9TH Street Suite #1415 Modesto, CA 95354
PHONE: 209 . 554 . 4602
HTTP://WWW.PEZENGR.COM

PEZZONI ENGINEERING, INC. © Copyrighted 2026

Westwood
Westwood Professional Services, Inc.
6200 STONERIDGE MALL ROAD, SUITE 330
PLEASANTON, CA 94588
T: 925.223.8340
westwoodps.com

NO.	DESCRIPTION	DATE	BY	APP. DATE	APP.

NHRPD SIERRA CREEK PARK

7781 WATT AVE, ANTELOPE
PARTIAL SITE PLAN ELECTRICAL

DATE: 08/14/2025
DRAFTER: CCM
DESIGNER: KLP
CHECKED: KLP
PROJECT NO.

REGISTERED PROFESSIONAL ENGINEER
KEVIN L. PEZZONI
NO. 16267
EXP. 12/26
ELECTRICAL
STATE OF CALIFORNIA

E1.1

Know what's below. Call before you dig.

08/10/26 12:39:09 PM F:\22\860 ANTELOPE SIERRA CREEK PARK\ENGR\SHEETS\860_E1.0 SITE PLAN – ELECTRICAL.DWG cmendez

08/10/26 12:39:08 PM F:\22\860 ANTELOPE SIERRA CREEK PARK\ENGR\SHEETS\860_E1.0 SITE PLAN – ELECTRICAL.DWG cmendez

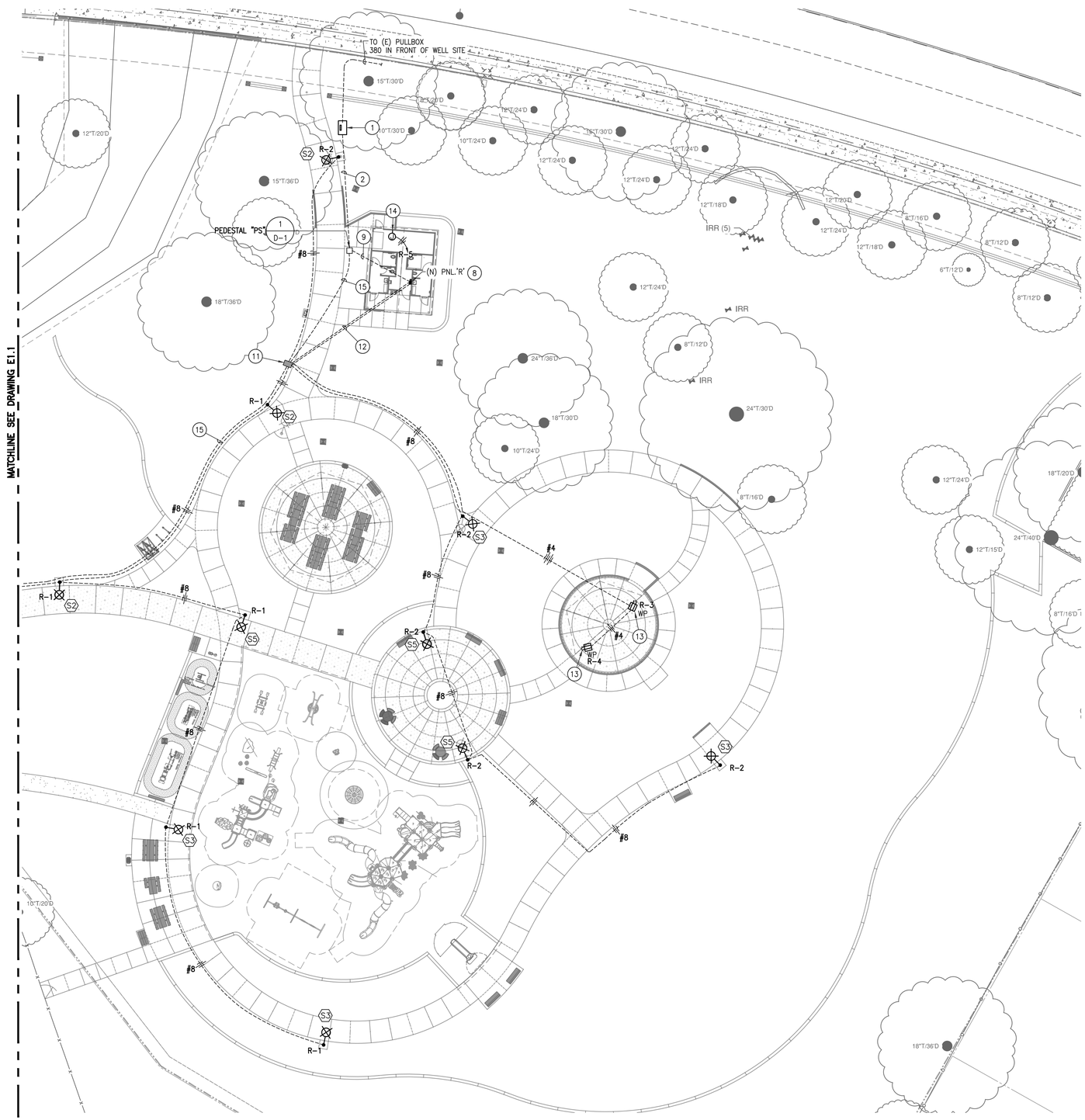

1 PARTIAL SITE PLAN ELECTRICAL

SCALE: 1"=20'-0"

SCALE IN FEET

0 10 20 40

PEZZONI ENGINEERING, INC.
CONSULTING ELECTRICAL ENGINEERS
1150 9TH Street Suite #1415 Modesto, CA 95354
PHONE: 209 . 554 . 4602
HTTP://WWW.PEZENGR.COM

PEZZONI ENGINEERING, INC. © Copyrighted 2026

(##) PLAN NOTES:

1. (N) SMUD XFMER PAD W/BOLLARD PROTECTION PER SMUD REQMTS. –INSTALL (N) 4" C. PRIMARY PER SMUD DRAWINGS.
2. (N) 3" C. W/FEEDER PER SMUD REQMTS. FOR SECONDARY FEEDER.
3. (N) 1–3" & 5–2" C. PATHWAYS FROM PULLBOX INTO PEDESTAL.
4. (N) N36 POWER PULLBOX PER DETAIL 5/E4.1.
5. (N) GFCI RECEPTACLE COORDINATE EXACT LOCATION W/CITY –INSTALL W/1" RMC RISER INTO A FD BOX.
6. (N) 2" C.O. FOR (F) EV CHARGER –ROUTE TO (N) N36 PULLBOX (NOTE #4) –INSTALL CONDUIT STUB PER DETAIL 4/E4.1.
7. (N) DUAL 7.2KW –208V –1PH EV PEDESTAL CHARGER SEE DETAIL 3/E3.1 –INSTALL (N) 2" C. W/4 #6 THWN CU & #10 CU GND VIA PULLBOX (NOTE #4).
8. CONNECT (N) BLDG PANEL (100A –120/240V –1PH –3W) FURNISHED BY MFR. –INSTALL (5X) (N) 20A–1P BREAKERS WITHIN (E) SPACES –LABEL AS "LTG PATHWAYS NORTH ", "LTG PATHWAYS PLAZA ", "LTG PATHWAYS SOUTH ", "RECP AMP "& "RECP AMP".
9. (N) 2" C. W/BLDG FEEDER PER SINGLE LINE DIAGRAM.
10. COORDINATE ROUTING OF CONDUIT ALONG UNDERSIDE OF BRIDGE –TRANSITION TO RMC PRIOR TO PENETRATING THE ABATEMENT ON EITHER END.
11. (N) N36 POWER PULLBOX PER DETAIL 5/E4.1.
12. (N) 3–2" C. PATHWAYS FROM PULLBOX INTO BLDG. PANEL.
13. (N) GFCI RECEPTACLE COORDINATE ROUTING WITHIN SHADE. STRUCTURE COLUMN.
14. (N) IRRIGATION CONTROLLER LOCATION –COORD & ROUTE (N) CKT FROM PNL. "R".
15. (N) 3" C. W/PEDESTAL "P" FEEDER PER SINGLE LINE DIAGRAM.
16. TRANSITION TO RMC AT BRIDGE WERE EXPOSED.

Know what's **below.**
Call before you dig.

Westwood
Westwood Professional Services, Inc.
6200 STONERIDGE MALL ROAD, SUITE 330
PLEASANTON, CA 94588
T: 925.223.8340
westwoodps.com

NO.	DESCRIPTION	DATE	BY	APP. DATE	APP.

NHRPD SIERRA CREEK PARK

7781 WATT AVE, ANTELOPE
PARTIAL SITE PLAN ELECTRICAL

DATE: 08/14/2025
DRAFTER: CCM
DESIGNER: KLP
CHECKED: KLP
PROJECT NO.

REGISTERED PROFESSIONAL ENGINEER
KEVIN L. PEZZONI
NO. 16267
EXP: 12/26
ELECTRICAL
STATE OF CALIFORNIA

E1.2

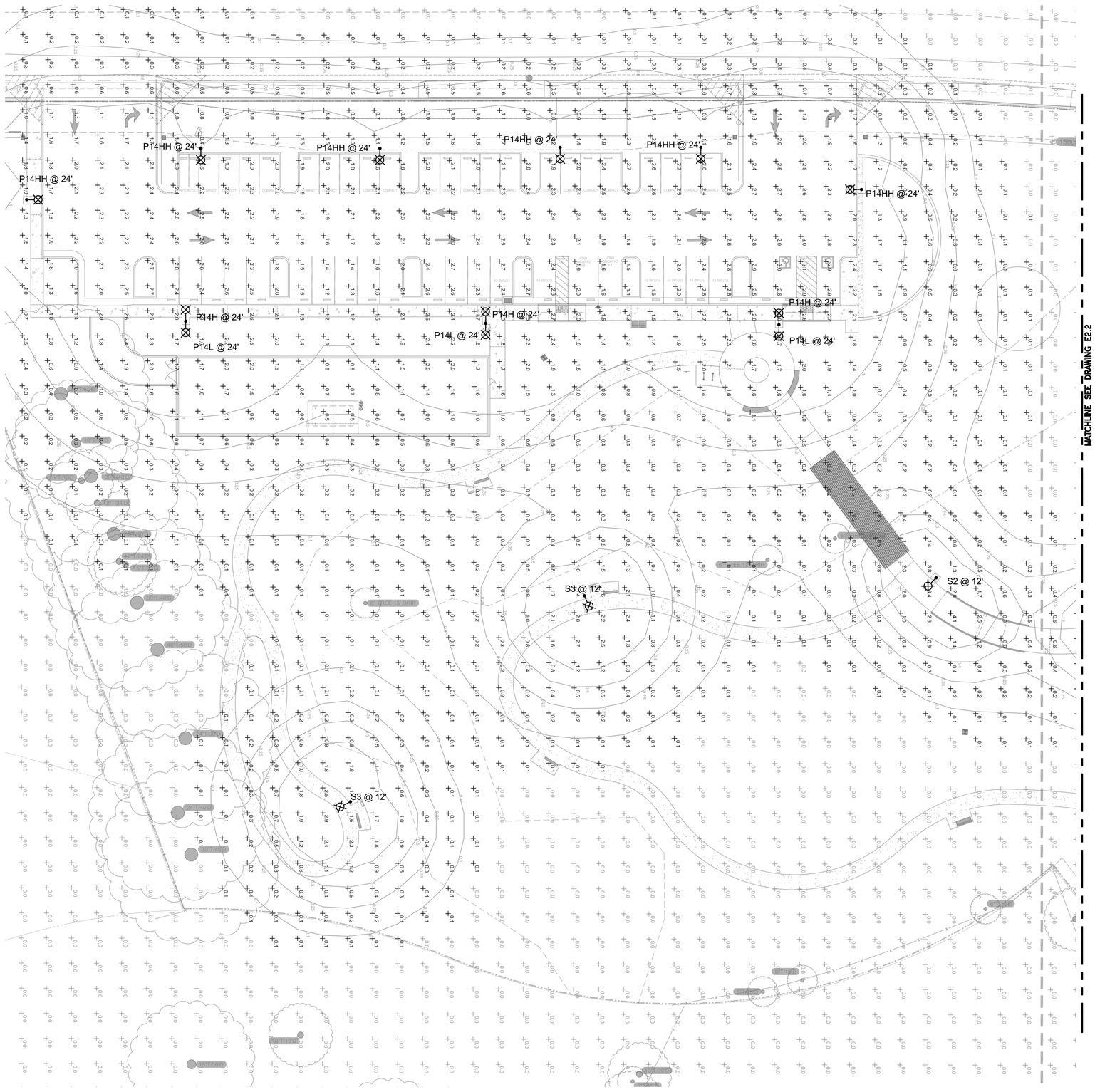

1 PARTIAL SITE PLAN PHOTOMETRICS

SCALE: 1"=20'-0"

SCALE IN FEET

0 10 20 40

PEZZONI ENGINEERING, INC.
CONSULTING ELECTRICAL ENGINEERS
1150 9TH Street Suite #1415 Modesto, CA 95354
PHONE: 209 . 554 . 4602
HTTP://WWW.PEZENGR.COM

PEZZONI ENGINEERING, INC. © Copyrighted 2026

Westwood
Westwood Professional Services, Inc.
8200 STONERIDGE MALL ROAD, SUITE 330
PLEASANTON, CA 94588
T: 925.223.8340
westwoodps.com

NO.	DESCRIPTION	DATE	BY	APP. DATE	APP.

NHRPD SIERRA CREEK PARK

7781 WATT AVE, ANTELOPE
PARTIAL SITE PLAN PHOTOMETRICS

DATE: 08/14/2025
DRAFTER: CCM
DESIGNER: KLP
CHECKED: KLP
PROJECT NO.

REGISTERED PROFESSIONAL ENGINEER
KEVIN L. PEZZONI
NO. 16266
EXP: 12/26
ELECTRICAL
STATE OF CALIFORNIA

E2.1

811 Know what's below. Call before you dig.

08/10/26 12:39:36 PM F:\22\860 ANTELOPE SIERRA CREEK PARK\ENGR\SHEETS\860_E2.0 SITE PLAN – PHOTOMETRICS.DWG cmendez

08/10/26 12:39:36 PM F:\22\860 ANTELOPE SIERRA CREEK PARK\ENGR\SHEETS\860_E2.0 SITE PLAN – PHOTOMETRICS.DWG cmendez

PEZZONI ENGINEERING, INC.
CONSULTING ELECTRICAL ENGINEERS
1150 9TH Street Suite #1415 Modesto, CA 95354
PHONE: 209 . 554 . 4602
HTTP://WWW.PEZENGR.COM

PEZZONI ENGINEERING, INC. © Copyrighted 2026

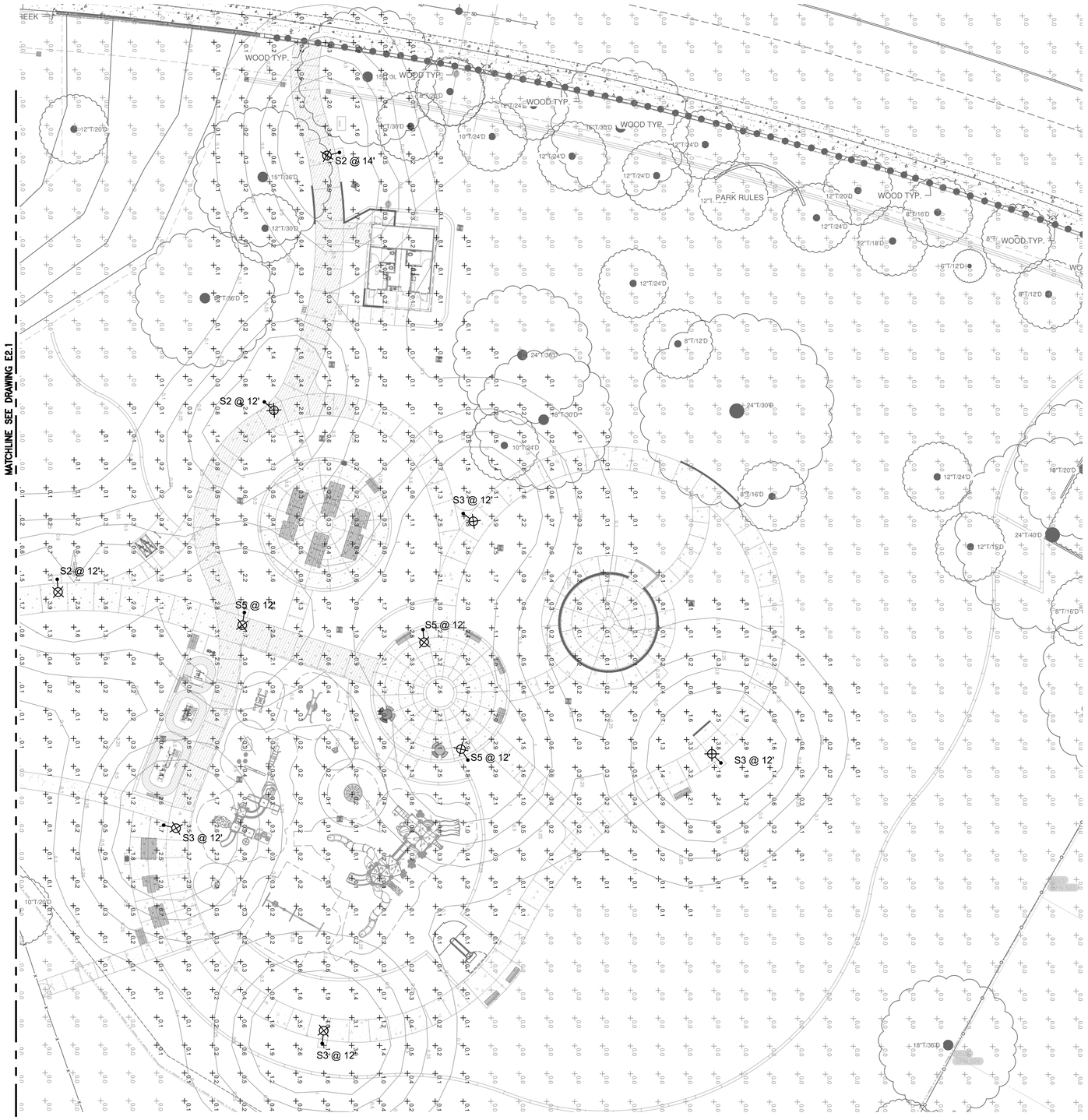

1 PARTIAL SITE PLAN PHOTOMETRICS
SCALE: 1"=20'-0"

SCALE IN FEET
0 10 20 40

Schedule

Label	QTY	Manufacturer	Catalog	Description	Lamp Output	Input Power
P14H	3	GARDCO	P20-C-A05-840-T4S	Pureform Area Small 20" Round, 196 LED's, 4000K CCT, TYPE T4S OPTIC, 80CRI	10256	93
P14L	3	GARDCO	P20-C-A03-840-T4S	Pureform Area Small 20" Round, 196 LED's, 4000K CCT, TYPE T4S OPTIC, 80CRI	5819	50.8914
P14HH	6	GARDCO	P20-C-A05-840-T4S-EHS	Pureform Area Small 20" Round, 196 LED's, 4000K CCT, TYPE T4S-EHS OPTIC, with External House-side Shield, 80CRI	7787	90.199
S2	4	GARDCO	PPT-196L-1150-NW-G2-2-UNV	PPT Pureform Post Top, 196 LED's, 4000K CCT, TYPE 2 OPTIC, Comfort Light Engine, 80CRI	4933	51
S3	6	GARDCO	PPT-196L-1150-NW-G2-3-UNV	PPT Pureform Post Top, 196 LED's, 4000K CCT, TYPE 3 OPTIC, Comfort Light Engine, 80CRI	5657	51

811 Know what's below. Call before you dig.

Westwood
Westwood Professional Services, Inc.
6200 STONERIDGE MALL ROAD, SUITE 330
PLEASANTON, CA 94588
T: 925.223.8340
westwoodps.com

NO.	DESCRIPTION	DATE	BY	APP. DATE	APP.

NHRPD SIERRA CREEK PARK
7781 WATT AVE, ANTELOPE
PARTIAL SITE PLAN PHOTOMETRICS

DATE: 08/14/2025
DRAFTER: CCM
DESIGNER: KLP
CHECKED: KLP
PROJECT NO.

REGISTERED PROFESSIONAL ENGINEER KEVIN L. PEZZONI NO. 16268 EXP. 12/26 ELECTRICAL STATE OF CALIFORNIA

E2.2

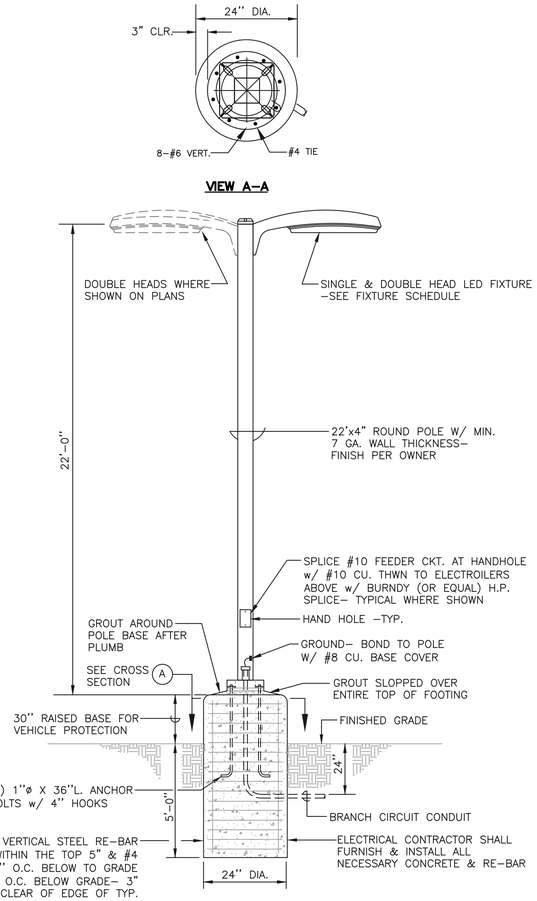

1 (N) LIGHT STANDARD FIXTURE TYPE "P"

SCALE: NTS

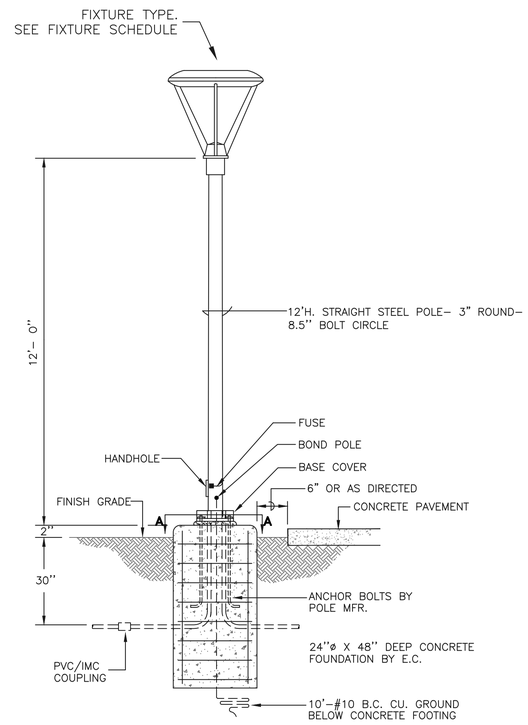

2 (N) LIGHT STANDARD FIXTURE TYPE "S"

SCALE: NTS

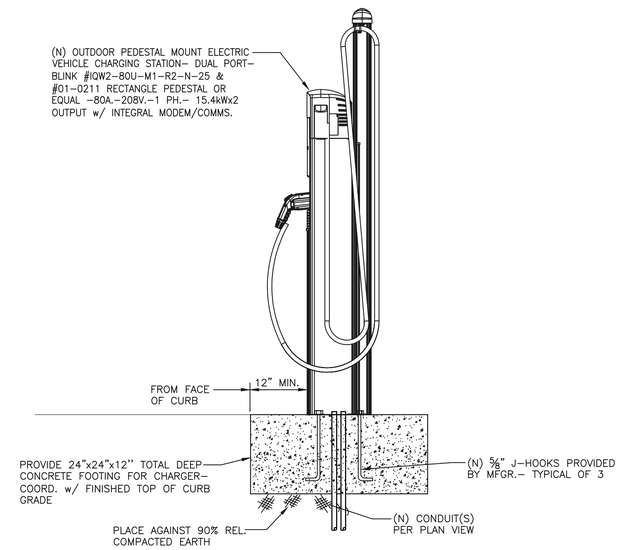

SIDE SECTION

3 ELECTRIC VEHICLE CHARGING STATION

SCALE: NTS

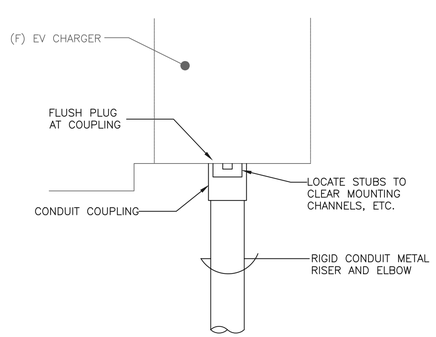

4 STUB AT FUTURE EV CHARGER

SCALE: NTS

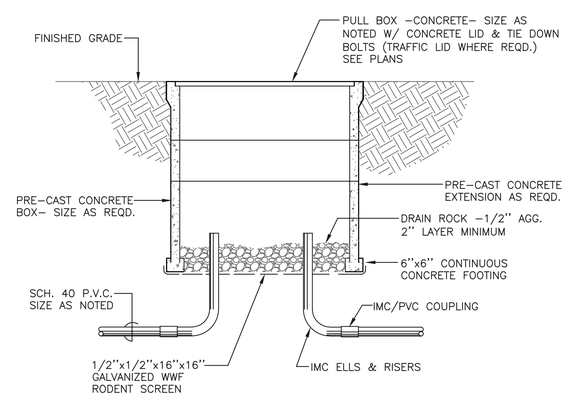

5 PULLBOX (TYP.)

SCALE: NTS

PEZZONI ENGINEERING, INC.
CONSULTING ELECTRICAL ENGINEERS
11150 9TH Street Suite #1415 Modesto, CA 95354
PHONE: 209 . 554 . 4602
HTTP://WWW.PEZENGR.COM

PEZZONI ENGINEERING, INC. © Copyrighted 2026

Westwood
Westwood Professional Services, Inc.
6200 STONERIDGE MALL ROAD, SUITE 330
PLEASANTON, CA 94588
T: 925.223.8340
westwoodps.com

NO.	DESCRIPTION	DATE	BY	APP. DATE	APP.

NHRPD SIERRA CREEK PARK

7781 WATT AVE, ANTELOPE

DETAILS

DATE: 08/14/2025

DRAFTER: CCM

DESIGNER: KLP

CHECKED: KLP

PROJECT NO.

REGISTERED PROFESSIONAL ENGINEER KELVIN L. PEZZONI NO. 16267 EXP. 12/26 ELECTRICAL CALIFORNIA

E3.1

Know what's below. Call before you dig.

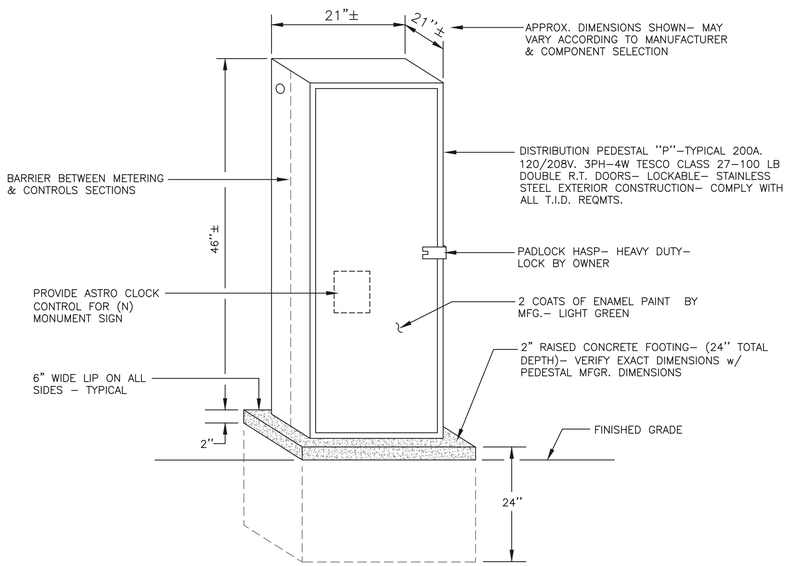

1 (N) SERVICE PEDESTAL

SCALE: NTS

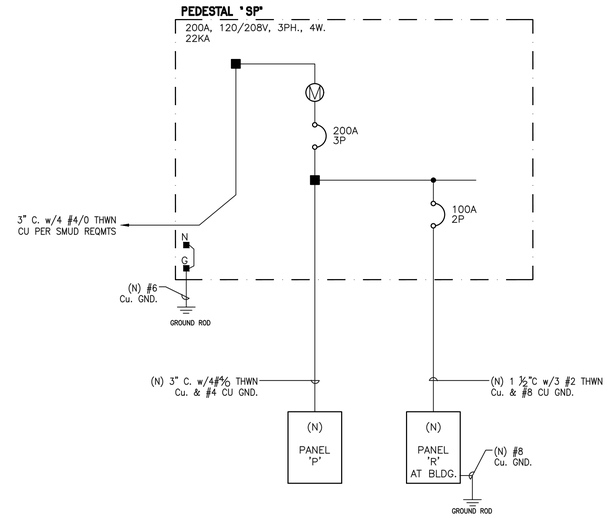

SERVICE PEDESTAL SINGLE LINE DIAGRAM

PEDESTAL SCHEDULE

PANEL: SP — TESCO 27–100 PEDESTAL
BUS RATING: 200 A. **PHASE:** 3ø **SCCR:** 22k
VOLTAGE: 120/208 V. **WIRE:** 4 **BUSSING:** Cu

CKT	DESCRIPTION	BRKR	TYPE	LOAD	A (va)	B (va)	C (va)	LOAD	TYPE	BRKR	DESCRIPTION	CKT
1	EV CHARGER #1	40/2	N	4000	4180			180	R	20/1	PEDESTAL RECP	2
3		/	N	4000		4000			L	20/1	LTG –PARKING LOT	4
5	EV CHARGER #2	40/2	N	4000			4000		L	20/1	LTG –PATHWAY	6
7		/	N	4000	4000							8
9	(F) EV CHARGER #3	40/2	N	4000		4000						10
11		/	N	4000			8000	4000	N	40/2	(F) EV CHARGER #8	12
13	(F) EV CHARGER #4	40/2	N	4000	8000			4000	N	/		14
15		/	N	4000		4180		180	R	20/1	RECP –COMM GARDEN	16
17	(F) EV CHARGER #5	40/2	N	4000			4000			20/1	SPARE	18
19		/	N	4000	4000					20/1	SPARE	20
21	(F) EV CHARGER #6	40/2	N	4000		4000				20/1	SPARE	22
23		/	N	4000			4000			20/1	SPARE	24
25	(F) EV CHARGER #7	40/2	N	4000	4000					20/1	SPARE	26
27		/	N	4000		4000				20/1	SPARE	28
					24180	20180	20000					

CONTINUOUS (C):	0 VA
NON–CONTINUOUS (N):	64000 VA
RECEP. (R):	360 VA
MOTOR (M) OR (M1):	0 VA
LIGHTING (L):	0 VA
KITCHEN >1750W (K):	0 VA

MCB: YES
MLO: –

MAX. PHASE @125% =	251.9 A.
DEMAND TOTAL =	64.4 kVA
=	178.6 A.

DEMAND CALC. PER ART 220

PEZZONI ENGINEERING, INC.
CONSULTING ELECTRICAL ENGINEERS
1150 9TH Street Suite #1415 Modesto, CA 95354
PHONE: 209 . 554 . 4602
HTTP://WWW.PEZENGR.COM

PEZZONI ENGINEERING, INC. © Copyrighted 2026

Westwood
Westwood Professional Services, Inc.
6200 STONERIDGE MALL ROAD, SUITE 330
PLEASANTON, CA 94588
T: 925.223.8340
westwoodps.com

NO.	DESCRIPTION	DATE	BY	APP. DATE	APP.

NHRPD SIERRA CREEK PARK

7781 WATT AVE, ANTELOPE

PEDESTAL DETAIL, PANEL SCHEDULE AND SINGLE LINE DIA.

DATE: 08/14/2025
DRAFTER: CCM
DESIGNER: KLP
CHECKED: KLP
PROJECT NO.

REGISTERED PROFESSIONAL ENGINEER KEVIN L. PEZZONI NO. 16267 EXP. 12/26 ELECTRICAL STATE OF CALIFORNIA

E3.2

Know what's below. Call before you dig.

08/10/26 12:39:52 PM F:\22\860 ANTELOPE SIERRA CREEK PARK\ENGR\SHEETS\860_E3.1 DETAILS.DWG cmendez

NORTH HIGHLANDS RECREATION AND PARK DISTRICT

SIERRA CREEK COMMUNITY PARK

7781 WATT AVE

BUILDING DEPARTMENT SUBMITTAL

IMPROVEMENT PLANS

ANTELOPE, SACRAMENTO COUNTY, CALIFORNIA

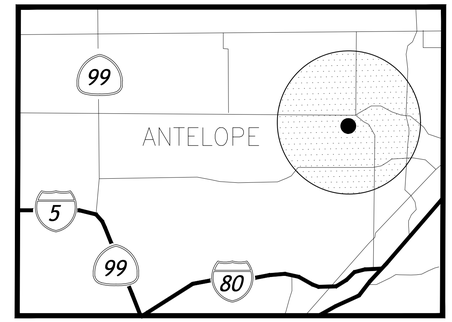

GENERAL NOTES

1. LANDSCAPE IMPROVEMENTS SHALL BE CONSTRUCTED IN COMPLIANCE WITH **SACRAMENTO COUNTY, CALIFORNIA** CURRENT STANDARDS AND SPECIFICATIONS. IN THE EVENT THERE IS A CONFLICT WITH THE PLANS AND REFERENCES STATED ABOVE, THE GOVERNING BODY STANDARDS AND SPECIFICATIONS SHALL PREVAIL. ALL WORK SHALL BE SUBJECT TO INSPECTION.
2. DESIGN: THE DRAWINGS HEREIN REPRESENT THE DESIGN TO BE IMPLEMENTED ON THE SITE DEPICTED. THE CONTRACTOR SHALL BE RESPONSIBLE FOR CONTACTING THE LANDSCAPE ARCHITECT TO CLARIFY PLAN DETAILS RELATED TO SITE OR CONSTRUCTION DETAILS NECESSARY FOR PROJECT COMPLETION.
3. COORDINATION: CONTRACTORS SHALL COORDINATE INSTALLATION AND SCHEDULING WITH THAT OF **OWNER/OWNER REPRESENTATIVE** AND OTHER CONTRACTORS EFFICIENTLY AND IN A TIMELY MANNER, ENSURING THE PROJECT COMPLETION IS UNIMPEDED AND INSTALLED CORRECTLY WITH MINIMAL MAINTENANCE. **OWNER/OWNER REPRESENTATIVE** SHALL BE CONTACTED DIRECTLY AT LEAST TWO WORKING DAYS (48 HOURS) PRIOR TO COVERING, COMPLETION, OR EXPOSING WORK THAT WILL BE INSTALLED.
4. SITE CONDITIONS: SEE GENERAL PROVISIONS, SPECIAL PROVISIONS, GENERAL REQUIREMENTS, AND TECHNICAL SPECIFICATIONS FOR CONTRACTOR RESPONSIBILITIES RELATED TO SITE CONDITIONS. CONTRACTOR SHALL EXAMINE EXISTING CONDITIONS OF SITE. IN THE EVENT THAT ON-SITE CONDITIONS DIFFER FROM CONDITIONS DEPICTED ON PLANS AND WILL IMPACT THE INSTALLATION PROCESS, THE CONTRACTOR SHALL SUBMIT THESE FINDINGS TO THE **LANDSCAPE ARCHITECT/OWNER** IN WRITING PRIOR TO BEGINNING WORK. COMMENCEMENT OF WORK IMPLIES ACCEPTANCE OF THE EXISTING SITE CONDITIONS.
5. BASE INFORMATION: THE PROPOSED LANDSCAPE IMPROVEMENTS SHOWN HEREIN ARE SUPERIMPOSED OVER DATA PROVIDED TO THE LANDSCAPE ARCHITECT BY OTHER SOURCES. THE LANDSCAPE ARCHITECT SHALL NOT BE HELD LIABLE FOR THE CHANGES, INACCURACIES, OMISSIONS, OR OTHER ERRORS RELATED TO THIS DATA. THE BASE INFORMATION IS PROVIDED AS AN AID ONLY. THE CONTRACTOR SHALL BE RESPONSIBLE FOR REVIEWING ALL DOCUMENTS AND ACCOMMODATING ANY DISCREPANCIES.
6. BIDDING INFORMATION: SEE GENERAL PROVISIONS, SPECIAL PROVISIONS, GENERAL REQUIREMENTS, AND TECHNICAL SPECIFICATIONS FOR CONTRACTOR RESPONSIBILITIES RELATED TO BIDDING INFORMATION AND SITE VISITS PRIOR TO BID SUBMITTAL.
7. UTILITIES: THE CONTRACTOR AND ANY SUBCONTRACTORS SHALL CONTACT U.S.A. AT LEAST TWO WORKING DAYS (48 HOURS) PRIOR TO BEGINNING WORK.
8. POT HOLING: ONLY EXCAVATION WILL REVEAL ACTUAL TYPES, LOCATIONS, SIZES, AND DEPTHS OF UNDERGROUND UTILITIES. THE LANDSCAPE ARCHITECT ASSUMES NO RESPONSIBILITY FOR THE ACCURACY OF UNDERGROUND UTILITIES OR OF BURIED EXISTING OBJECTS AND UTILITIES NOT SHOWN ON THESE PLANS.
9. AS-BUILTS: FOR AS-BUILT PURPOSES, THE CONTRACTOR SHALL KEEP A CURRENT SET OF DRAWINGS ON SITE AT ALL TIMES WITH DEVIATIONS FROM ORIGINAL PLANS AND SPECIFICATIONS NOTED. UPON PROJECT COMPLETION THE CONTRACTOR SHALL PROVIDE THE CITY WITH A DIGITAL FORMAT, COMPLETE SET OF AS-BUILT DRAWINGS.

DEFERRED SUBMITTALS

1. BRIDGE: CONTRACTOR TO PROVIDE DETAILED ENGINEERED SHOP DRAWINGS FOR SACRAMENTO COUNTY APPROVAL BEFORE PROCUREMENT AND INSTALLATION.
2. PLAYGROUND EQUIPMENT FOOTING.

SCOPE OF WORK

THE PROPOSED PROJECT CONSISTS OF THE CONSTRUCTION OF A NEW COMMUNITY PARK FEATURING A PARKING LOT, COMMUNITY GARDEN, PLAYGROUND, SHADE-COVERED PICNIC AREAS, A PEDESTRIAN BRIDGE, A RESTROOM FACILITY, RECREATIONAL OPEN SPACE, POWER AND LIGHTING, AND OTHER STANDARD PARK IMPROVEMENTS.

ABBREVIATIONS

BC	BOTTOM OF CURB	INV	INVERT ELEVATION
BW	BOTTOM OF WALL	MAX	MAXIMUM
BOW	BACK OF WALL	ME	MECHANICAL ENGINEER
CJ	TOOLED CONTROL JOINT	MIN	MINIMUM
CL	CENTERLINE	(N)	NEW
CLR	CLEAR	OC	ON CENTER
CIP	CAST IN PLACE	PA	PLANTING AREA
CMU	CONCRETE MASONRY UNIT	PIP	POURED IN PLACE CONCRETE
C	CONCRETE	POB	POINT OF BEGINNING
DG	DECOMPOSED GRANITE	R	RADIUS
DWGS	DRAWINGS	RIM	RIM ELEVATION
(E) OR EX	EXISTING	RP	RADIUS POINT
EJ	EXPANSION JOINT	SAD	SEE ARCHITECTURAL DRAWINGS
EQ	EQUAL	SCD	SEE CIVIL DRAWINGS
FC	FACE OF CURB	SED	SEE ELECTRICAL DRAWINGS
FDE	FINISH DECK ELEVATIONS	SIM	SIMILAR
FF/FFE	FINISH FLOOR ELEVATION	SLD	SEE LANDSCAPE DRAWINGS
FG	FINISH GRADE	SP	SPACE
FL	FLOW LINE	TBD	TO BE DETERMINED
FOB	FACE OF BUILDING	TC	TOP OF CURB
FOW	FACE OF WALL	TP	TOP OF PAVEMENT
FS	FINISH SURFACE	TW	TOP OF WALL
FV	FIELD VERIFY	TYP	TYPICAL
HP	HIGH POINT		

APPROVED BY NORTH HIGHLANDS RECREATION AND PARK DISTRICT

BY: DATE:

APPROVED BY SACRAMENTO COUNTY

BY: DATE:

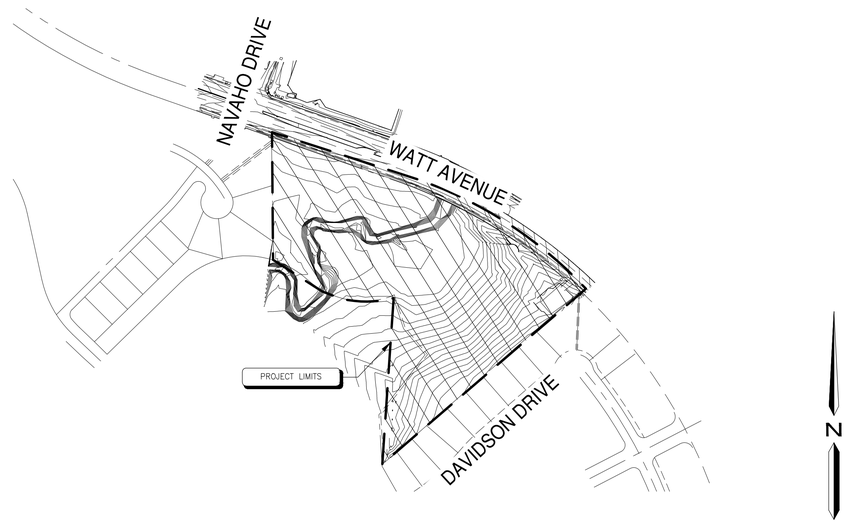

VICINITY MAP

0 50' 100' 200'
SCALE: 1" = 200'

PROJECT INFORMATION

PROJECT TITLE:	7781 WATT AVE SIERRA CREEK COMMUNITY PARK	PROJECT TYPE:	NEW CONSTRUCTION
PARCEL NUMBER:	203-0310-045	ADJACENT PROPERTY USES:	NORTH - NEW RESIDENTIAL DEVELOPMENT SOUTH - SCHOOL EAST - RESIDENTIAL WEST - RESIDENTIAL
PROJECT ADDRESS:	7781 WATT AVE, ANTELOPE, CA, 95843	GEOTECHNICAL REPORT:	BY ENGEO DATED 12/12/2022
APPLICANT/OWNER:	NHRPD		
PLANS PREPARED BY:	O'DELL ENGINEERING, A WESTWOOD COMPANY 6200 STONERIDGE MALL ROAD, SUITE 330 PLEASANTON, CA 94588 (925) 223-8340 OFFICE EMAIL: KAREN.FOLSOM@WESTWOODPS.COM	TOPOGRAPHIC SURVEY:	BY O'DELL ENGINEERING, A WESTWOOD COMPANY DATED 03/06/2023
LICENSE NUMBER:	CLA #4994	ARBORIST REPORT:	PROVIDED BY OWNER
LANDSCAPE AREA	232,203 SQUARE FEET		

PROJECT TEAM

WESTWOOD

LANDSCAPE ARCHITECT:
KAREN FOLSOM
WESTWOOD
6200 STONERIDGE MALL ROAD, SUITE 330
PLEASANTON, CA 94588
(925) 223-8340
KAREN.FOLSOM@WESTWOODPS.COM

CIVIL:
ROBERT CHEN
WESTWOOD
6200 STONERIDGE MALL ROAD, SUITE 330
PLEASANTON, CA 94588
(925) 223-8340
ROBERT.CHEN@WESTWOODPS.COM

SURVEY:
SCOTT ROBERTS
WESTWOOD
7110 N FRESNO STREET, #160
FRESNO, CA 93720
(559) 451-0395
SCOTT.ROBERTS@WESTWOODPS.COM

ELECTRICAL
KEVIN PEZZONI
PEZZONI ENGINEERING
1150 9TH STREET, SUITE 1415
MODESTO, CA 95354
(209) 554-4602
KPEZZONI@PEZENGR.COM

STRUCTURAL
NICK FAHRNEY
PELTON WYLIE + FAHRNEY
2813 COFFEE ROAD, SUITE D1
MODESTO, CA 95355
(209) 575-9619
NICK@PWF-ENG.COM

SHEET INDEX

LANDSCAPE

L2.0	SITE FEATURES LEGEND & NOTES
L2.1	SITE FEATURES PLAN
L2.2	SITE FEATURES PLAN
L2.3	ENLARGEMENT PLAN
L2.4	SECTIONS & ELEVATIONS PLAN
L6.0	CONSTRUCTION DETAILS (FOR REFERENCE ONLY)
L6.1	CONSTRUCTION DETAILS (FOR REFERENCE ONLY)
L6.2	CONSTRUCTION DETAILS (FOR REFERENCE ONLY)
L6.3	CONSTRUCTION DETAILS (FOR REFERENCE ONLY)
L6.4	CONSTRUCTION DETAILS (FOR REFERENCE ONLY)
L6.5	CONSTRUCTION DETAILS (FOR REFERENCE ONLY)
L6.6	BRIDGE DETAILS (FOR REFERENCE ONLY)

CIVIL

C3.1	UTILITY PLAN (FOR REFERENCE ONLY)
C3.2	UTILITY PLAN (FOR REFERENCE ONLY)

STRUCTURAL

S1.1	STRUCTURAL NOTES 7 DETAILS
S1.2	STRUCTURAL DETAILS

ELECTRICAL

E0.1	GENERAL NOTES, ABBREVIATIONS, AND ELECTRICAL SYMBOLS
E1.1	PARTIAL SITE PLAN ELECTRICAL
E1.2	PARTIAL SITE PLAN ELECTRICAL
E2.1	PARTIAL SITE PLAN - PHOTOMETRICS
E2.2	PARTIAL SITE PLAN - PHOTOMETRICS
E3.1	DETAILS
E3.2	PEDESTAL DETAIL, PANEL SCHEDULE AND SINGLE LINE DIA.

SHADE STRUCTURE - HHA

C1	COVER SHEET
1	ARCHITECTURAL ELEVATIONS
2	ANCHOR AND FOOTING LAYOUT
2.1	ANCHOR AND FOOTING DETAILS
3	STRUCTURAL FRAMING PLAN
4	FRAME CONNECTION DETAILS
4.1	FRAME CONNECTION DETAILS
5	ELECTRICAL VIEWS
6	ROOF OVERVIEW
6.1	ROOF LAYOUT
6.2	ROOF LAYOUT
6.3	ROOF LAYOUT
7	ROOF CONNECTION DETAILS
7.1	ROOF CONNECTION DETAILS
7.2	ROOF CONNECTION DETAILS

SHADE STRUCTURE - OTC

C1	COVER SHEET
1	ARCHITECTURAL ELEVATIONS
2	ANCHOR AND FOOTING LAYOUT
2.1	ANCHOR AND FOOTING DETAILS
3	STRUCTURAL FRAMING PLAN
4	FRAME CONNECTION DETAILS
4.1	FRAME CONNECTION DETAILS
6	ROOF OVERVIEW
6.1	ROOF LAYOUT
7	ROOF CONNECTION DETAILS
7.1	ROOF CONNECTION DETAILS
7.2	ROOF CONNECTION DETAILS

SHADE STRUCTURE - RAM

C1	COVER SHEET
1	ARCHITECTURAL ELEVATIONS
2	ANCHOR AND FOOTING LAYOUT
2.1	ANCHOR AND FOOTING DETAILS
3	STRUCTURAL FRAMING PLAN
4	FRAME CONNECTION DETAILS
4.1	FRAME CONNECTION DETAILS
6	ROOF OVERVIEW
6.1	ROOF LAYOUT
6.2	ROOF LAYOUT
7	ROOF CONNECTION DETAILS
7.1	ROOF CONNECTION DETAILS

RESTROOM BUILDING

T-1	TITLE SHEET
AC	ACCESSIBILITY
A-1	FLOOR PLAN & DOOR & DESIGN SCHEDULES
A-1.1	SECTIONS
A-1.2	ROOF FRAMING PLAN
A-2	EXTERIOR ELEVATIONS & EXT. FINISH SCHEDULE
A-3	INT ELEVATIONS, LAYOUT, FINISH & ACC. SCHEDULES
A-4	DETAILS
A-4.1	DETAILS
A-5	CAP BEAM PLAN & DETAILS
A-5.1	CAP BEAM PLAN & DETAILS
P-1	PLUMBING PLAN & INFORMATION
E-1	ELECTRICAL PLAN & INFORMATION
E-2	SOLAR ZONE PLAN
S-1	SLAB PLAN

Know what's **below.**
Call before you dig.

Westwood
Westwood Professional Services, Inc.
6200 STONERIDGE MALL ROAD, SUITE 330
PLEASANTON, CA 94588
T: 925.223.8340
westwoodps.com

NO.	DESCRIPTION	DATE	BY	APP. DATE	APP.
	BUILDING DEPT. SUBMITTAL	8/31/2026			

NHRPD SIERRA CREEK PARK

7781 WATT AVE, ANTELOPE

COVER SHEET

DATE: 08/31/26
DRAFTER: TH, AL, CY
DESIGNER: KF, TH
CHECKED: KF, JG

PROJECT NO.
41541

LICENSED LANDSCAPE ARCHITECT
KAREN M. FOLSOM
Signature
03/31/27
Renewal Date
08/31/26
Date
STATE OF CALIFORNIA

CS

Last Saved by: MALoureiro
Plot Date: Tuesday, August 26, 2026 9:46 AM
Drawing: N:_DSE\Pleasanton\41541 NHRPD Sierra Creek Park\Landscape\Const\Plans\41541-CS -BUILDING

GENERAL NOTES

1. COORDINATE INSTALLATION OF **SITE FURNISHINGS AND STRUCTURES** WITH OTHER WORK OF **GRADING, CONCRETE, AND ELECTRICAL**.
2. ALL SITE FURNISHINGS SHALL BE LOCATED AS SHOWN ON THE DRAWINGS, AND ASSEMBLED AND INSTALLED PER THE MANUFACTURER'S SPECIFICATIONS. SITE FURNISHING INSTALLATION SCHEDULE SHALL BE COORDINATED WITH OTHER CONTRACTORS TO AVOID CONFLICT AND POSSIBLE DAMAGE.
3. CONTRACTOR SHALL EXAMINE RELATED WORK AND SURFACES BEFORE STARTING WORK OF THIS SECTION AND SHOULD REPORT TO THE **LANDSCAPE ARCHITECT AND/OR DISTRICT** IN WRITING ANY CONDITIONS WHICH WILL PREVENT THE PROPER PROVISION OF WORK. BEGINNING THE WORK OF THIS SECTION WITHOUT REPORTING UNSUITABLE CONDITIONS CONSTITUTES ACCEPTANCE OF CONDITIONS. ANY REQUIRED REMOVAL, REPAIR OR REPLACEMENT OF WORK CAUSED BY UNSUITABLE CONDITIONS SHALL BE DONE AT NO ADDITIONAL COST TO THE **DISTRICT**.
4. CONTRACTOR SHALL PROVIDE CONSTRUCTION STAKING.
5. CONTRACTOR SHALL PROVIDE COMPACTION TESTING. REPORTS SHALL BE DELIVERED DIRECTLY FROM THE LAB TO THE OWNER OR OWNER REPRESENTATIVE.
6. ALL EARTHWORK, GRADING AND SOIL DELIVERY/REMOVAL SHALL BE PROVIDED BY THE CONTRACTOR.
7. ALL CONCRETE COLORS SHALL BE REVIEWED AND APPROVED BY **DISTRICT** PRIOR TO INSTALLATION.
8. INSTALL INTEGRAL COLOR CONCRETE MIX AT MANUFACTURER'S RECOMMENDED RATES FOR SPECIFIED COLORS LISTED ABOVE.
9. APPLY COLOR SEAL TO COLORED CONCRETE BY MEANS, RATE AND TIMING AS RECOMMENDED BY MANUFACTURER.
10. CONTRACTOR SHALL PROVIDE A 6'X6' POURED MOCK UP **CONCRETE PAVING–INTEGRAL COLOR**, FINISH AND JOINTING TO OWNER FOR REVIEW AND APPROVAL PRIOR TO INSTALLATION. THIS SAMPLE TO REMAIN UNTIL CONSTRUCTION HAS CONCLUDED.

REFER TO SPECIFICATIONS FOR FURTHER REQUIREMENTS.

PLAY EQUIPMENT NOTES

1. GENERAL CONTRACTOR SHALL COORDINATE INSTALLATION OF PLAY EQUIPMENT AND SAFETY SURFACING WITH OTHER WORK OF GRADING, CONCRETE, AND UTILITY INSTALLATIONS.
2. CONTRACTOR TO LAYOUT PLAY EQUIPMENT AND VERIFY FALL ZONES PRIOR TO INSTALLATION OF FOOTINGS AND PERIMETER HARDSCAPE.
3. POURED–IN–PLACE RUBBER SAFETY SURFACING TO INCLUDE ALIPHATIC BINDER.

REFERENCE SCHEDULE

ITEM	DESCRIPTION	REFERENCE
A	PATHWAY LIGHT POLE	SEE ELECTRICAL SHEETS
B	PARKING LOT LIGHT POLE	SEE ELECTRICAL SHEETS
C	VISION TRIANGLE	PER COUNTY STANDARD
D	REFER TO ELECTRICAL	SEE L2.2
E	SIERRA CREEK	
F	BIOSWALE	REFER TO CIVIL SHEETS
G	COMMUNITY GARDEN (FUTURE)	
H	DRAIN INLET	REFER TO CIVIL SHEETS
I	EXISTING WALL TO REMAIN	REFER TO TOPOGRAPHIC SURVEY
J	EXISTING FENCE AND GATES TO REMAIN	REFER TO TOPOGRAPHIC SURVEY
K	VAN ACCESSIBLE PARKING SIGN	SEE DETAIL 2 SHEET L6.4
L	ACCESSIBLE PARKING SIGN	REFER TO CIVIL SHEETS
M	LEFT TURN ONLY SIGN	REFER TO CIVIL SHEETS
N	PARKING LOT ENTRY SIGN	SEE DETAIL 1 SHEET L6.4

REFERENCE KEY

SCHEDULE KEY

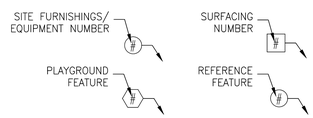

SECTION CUT

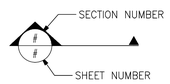

CONCRETE JOINT LEGEND

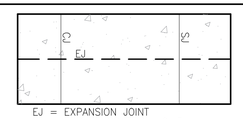

EJ = EXPANSION JOINT
SJ = TOOLED CONTROL JOINT
CJ = COLD JOINT

SITE FINISH SCHEDULE

FINISH	DESCRIPTION	COLOR	QUANTITY	PATTERN / INFORMATION	DET REF.
A	CONCRETE PAVING	NATURAL GREY	12,250 SF	MEDIUM BROOM FINISH	L6.0/1&2
B	CONCRETE PAVING –INTEGRAL COLOR	PEBBLE	7,120 SF	MEDIUM BROOM FINISH / DAVIS COLORS / DAVISCOLORS.COM / P: (800) 356–4848	L6.0/1&2
C	DECOMPOSED GRANITE	NATURAL GOLD	6,386 SF	GRANITECRETE / GRANITECRETE.COM	L6.0/5
D	ASPHALT PAVING (PARKING AND SERVICE ACCESS)	STANDARD	19,510 SF	PER CIVIL PLANS	–
E	ENGINEERED WOOD FIBER	NATURAL	5,103 SF	FIBAR SYSTEM, OR EQUAL	L6.0/7
F	GRAVEL SERVICE ROAD	TBD	510 SF	INSTALL PER DETAILS	L6.0/4
G	BARK MULCH (3" MIN. DEPTH)	NATURAL	10,650 SF	DISTRICT STANDARD	–
H	CONCRETE PAVING (VEHICULAR ACCESS)	MATCH EXISTING	2,400 SF	MEDIUM BROOM FINISH	L6.0/1&2
I	PLANTING AREA, SEE PLANTING PLANS, SHEETS L5.0–L5.2				
J	SAFETY SURFACING (PIP RUBBER)	BROWN 50%/ BEIGE 50%	4,309 SF	SURFACE AMERICA	L6.0/2, 6,8&9
K	COLORED CONCRETE (VEHICULAR ACCESS)	PEBBLE	620 SF	MEDIUM BROOM FINISH / DAVIS COLORS / DAVISCOLORS.COM / P: (800) 356–4848	L6.0/1&2

PLAYGROUND FEATURE SCHEDULE

ITEM	DESCRIPTION / MODEL	COLOR	QUANTITY	MANUFACTURER/SUPPLIER/CONTACT INFORMATION	DET.REF.
1	XSCAPE 2–BAY SWING	COLORS SHOWN IN RENDERING, SEE L2.3	1	MRC RECREATION QUOTE #115244–05–01, CONTACT KELLY OAKES, P: (800) 922–0070, EMAIL: KOAKES@MRCREC.COM	PER MANUF.
2	ARCH SWING (GALV)		1		
3	INCLUSIVE SEESAW		1		
4	CUSTOM PRIMETIME PLAY STRUCTURE (2–5 YRS)		1		
5	TURTLE SPRING RIDER		1		
6	CUSTOM POWERSCAPE PLAY STRUCTURE (5–12 YRS)		1		
7	VISTATREE TOP 1		1		
8	SENSORY WAVE SEAT		1		
9	ROCKIN' ROBIN		1		
10	64" ROLLERSLIDE W/ EXIT TRANSFER BENCH	TBD	1	LANDSCAPE STRUCTURES / CP006960 / 707–538–3800	L6.1/2
11	SHADOW PLAY FLOWER	SEE BELOW	1	MRC RECREATION QUOTE #115244–05–01, CONTACT KELLY OAKES, P: (800) 922–0070, EMAIL: KOAKES@MRCREC.COM	PER MANUF.
12	MUSICAL EQUIPMENT	CATERPILLAR FLOWER– TURQUOISE BUTTERFLY– ORANGE		FREENOTE	

SITE FEATURE SCHEDULE

ITEM	DESCRIPTION / MODEL	COLOR	QUANTITY	MANUFACTURER / SUPPLIER / INFORMATION	DET REF.
1	BACKED BENCH 6' / MODEL # 424	TIERRA	7 EA	OUTDOOR CREATIONS / CHAD SMITH / P: (530) 365–6106	L6.3/1
2	BACKLESS BENCH 6' / MODEL # 402	TIERRA	6 EA		L6.3/2
3	PICNIC TABLE / MODEL # 101FSSK	TIERRA	10 EA		L6.3/5
4	PICNIC TABLE ADA / MODEL # 101FSSK RE	TIERRA	3 EA		L6.3/6
5	ROUND TABLE ADA / MODEL # 107AC	TIERRA	1 EA		L6.3/4
6	CUSTOM PARK SIGN	HUNTER GREEN / SAN DIEGO BUFF	1 EA		L6.2/6
7	BBQ – SINGLE / MODEL # 21	BLACK	1 EA	DUMOR / DUMOR.COM / P: (800) 598–4018	L6.3/3
8	BBQ – GROUP / MODEL # 24	BLACK	1 EA		L6.3/3 SIM
9	BIKE RACK / MODEL # 292 (S–2)	SUDAN	4 EA		L6.0/11 & L6.4/3
10	BOLLARD – REMOVABLE / MODEL # 400–42–2–1SL	BLACK	3		L6.4/6
11	TRASH RECEPTACLE / MODEL # CE140MB–FP	FIR GREEN / TRASH LABEL	5 EA	BEARSAVER / WWW.BEARSAVER.COM	L6.3/7
12	RECYCLING RECEPTACLE / MODEL # CE140MB–FP	SKY BLUE / RECYCLING LABEL	5 EA		L6.3/7
13	BIKE LOCKER / MODEL # VSI1–GRY14–REVB	GREY	2	GROUND CONTROL SYSTEMS / NIKO GONZALEZ / P: (209) 275–8051	L6.4/3
14	PET STATION / MODEL # 1003A–L	FOREST GREEN	1	DOG–I–POT / DOGIPOT.COM / P: (800) 364–7681	L6.4/5
15	DRINKING FOUNTAIN / MODEL # 440 SMFA W/ PET FOUNTAIN	GREEN	2 EA	MOST DEPENDABLE FOUNTAINS / ANGELA HORNE / P: (901) 867–0039	L6.2/7
16	CONCRETE MOW BAND – 12"	TROWEL FINISH / MATCH ADJACENT	900 LF	INSTALL PER DETAILS	L6.0/3
17	ROUND TABLE STANDARD MODEL # 107S	TIERRA	1 EA	OUTDOOR CREATIONS / CHAD SMITH / P: (530) 365–6106	L6.3/4
18	DEEPENED PLAYGROUND EDGE	MATCH ADJACENT	500 LF	INSTALL PER DETAILS	L6.0/6,8&9
19	NOT USED				
20	CONCRETE RETAINING WALL AT AMPHITHEATER	SANDBLAST FINISH / NATURAL GREY	130 LF		L6.1/3
21	CONCRETE SEATWALL	SANDBLAST FINISH / INTEGRAL COLOR	20 LF		L6.1/4
22	BRIDGE 10' WIDE – CONNECTOR PEDESTRIAN TRUSS	WEATHERED STEEL / CONCRETE	1 EA	CONTACT BRIDGE BROTHERS FOR ENGINEERED DRAWINGS FOR DEFERRED SUBMITTAL DATED 04/01/2025, CONTACT AARON GENTILUCCI. P: (866) 258–3401, EMAIL: AGENTILUCCI@BRIDGEBROTHERSINC.COM	–
23	PILASTER	MATCH SIGN	12 EA	INSTALL PER DETAILS	L6.2/5
24	FENCE – 4' TUBULAR STEEL WITH 18" MOW BAND	POWDERCOAT BLACK	626 LF	AMERISTAR OR EQUAL	L6.2/4
25	FENCE – 5' TUBULAR STEEL WITH 12" MOW BAND	POWDERCOAT BLACK	297 LF		L6.2/1
26	GATE PEDESTRIAN – 5' TUBULAR STEEL	POWDERCOAT BLACK	1 EA		L6.2/3
27	GATE VEHICULAR – 5' TUBULAR STEEL	POWDERCOAT BLACK	1 EA		L6.2/2
28	SHADE STRUCTURE (GARDEN) / MODEL # RAM12X22MR	BUCKSKIN/UPTOWN BRONZE	1 EA	MIRACLEPLAY / SHANA / EMAIL: SHANA@MIRACLEPLAYSYSTEMS.COM	L6.5/3
29	SHADE STRUCTURE (PICNIC) / MODEL # OTC40MR	BUCKSKIN/UPTOWN BRONZE	1 EA		L6.5/2
30	SHADE STRUCTURE (AMPHITHEATER) / MODEL # HHA32MR	BUCKSKIN/UPTOWN BRONZE	1 EA		L6.5/1
31	RESTROOM BUILDING – OWNER PROVIDED	SEE DETAIL	1 EA	PUBLIC RESTROOM COMPANY / STEVE MYLER / P: (888) 888–2060 EXT 103	L6.6/1
32	INTERPRETIVE SIGNAGE	SEE DETAIL	3	ENVIRONSIGNS / JOHN PETERS / P: (888) 492–5377 EXT 1	L6.4/8
33	FITNESS EQUIPMENT – 3 PERSON STATIC COMBO – #SGR071	GREEN	1 EA	GREENFIELDS EQUIPMENT / GFOUTDOORFITNESS.COM	PER MANUF.
34	FITNESS EQUIPMENT – ELLIPTICAL CROSS TRAINER – #SHP503	GREEN	1 EA		PER MANUF.
35	FITNESS EQUIPMENT – 2 PERSON ACCESSIBLE SHOULDER WHEEL – #UBX286	GREEN	1 EA		PER MANUF.
36	CONCRETE PERIMETER BAND AT EWF SURFACING	TROWEL FINISH / MATCH ADJACENT	172 LF	INSTALL PER DETAIL	L6.0/6 SIM
37	NOT USED				L6.1/1
38	CULVERT	SEE DETAIL	1 EA		
39	GATE	SEE DETAIL	1 EA	CONTRACTOR TO PROVIDE SHOP DRAWINGS	L6.3/8
40	VERTICAL CURB / RETAINING WALL	SEE DETAIL	27 LF	INSTALL PER DETAIL	L6.0/12
41	PROPOSITION 68 SIGN	SEE DETAIL	1 EA		L6.4/7
42	VERTICAL CURB WITH HANDRAIL	SEE DETAIL	30 LF		L6.1/5
43	CONCRETE RETAINING WALL AT RESTROOM	SANDBLAST FINISH / NATURAL GREY	30 LF		L6.1/3 SIM
44	6" TYPE 3 FREESTANDING CURB	TROWEL FINISH / MATCH ADJACENT	1,211 LF		L6.0/13
45	CONCRETE BAND AT FITNESS AREA	TROWEL FINISH / MATCH ADJACENT	71 LF		L6.0/10

811 Know what's **below.** **Call** before you dig.

Westwood
Westwood Professional Services, Inc.
6200 STONERIDGE MALL ROAD, SUITE 330
PLEASANTON, CA 94588
T: 925.223.8340
westwoodps.com

NO.	DESCRIPTION	DATE	BY	APP. DATE	APP.

ANTELOPE, CALIFORNIA

NHRPD SIERRA CREEK PARK

7781 WATT AVE

SITE FEATURES LEGEND & NOTES

DATE: 08/31/26
DRAFTER: TH, AL, CY
DESIGNER: KF, TH
CHECKED: KF, JG
PROJECT NO. **41541**

LICENSED LANDSCAPE ARCHITECT — JOHN N. FOLSOM — Signature — 03/31/27 Renewal Date — 08/31/26 Date — STATE OF CALIFORNIA

L2.0

Last Saved by: MAJourneay
Plot Scale: 1:1 Plot Date: 8/26/2026 9:37 AM
Drawing: N:_CIDE\Pleasanton\41541 NRHPD Sierra Creek Park\Landscape\ConstPlans\41541-SF

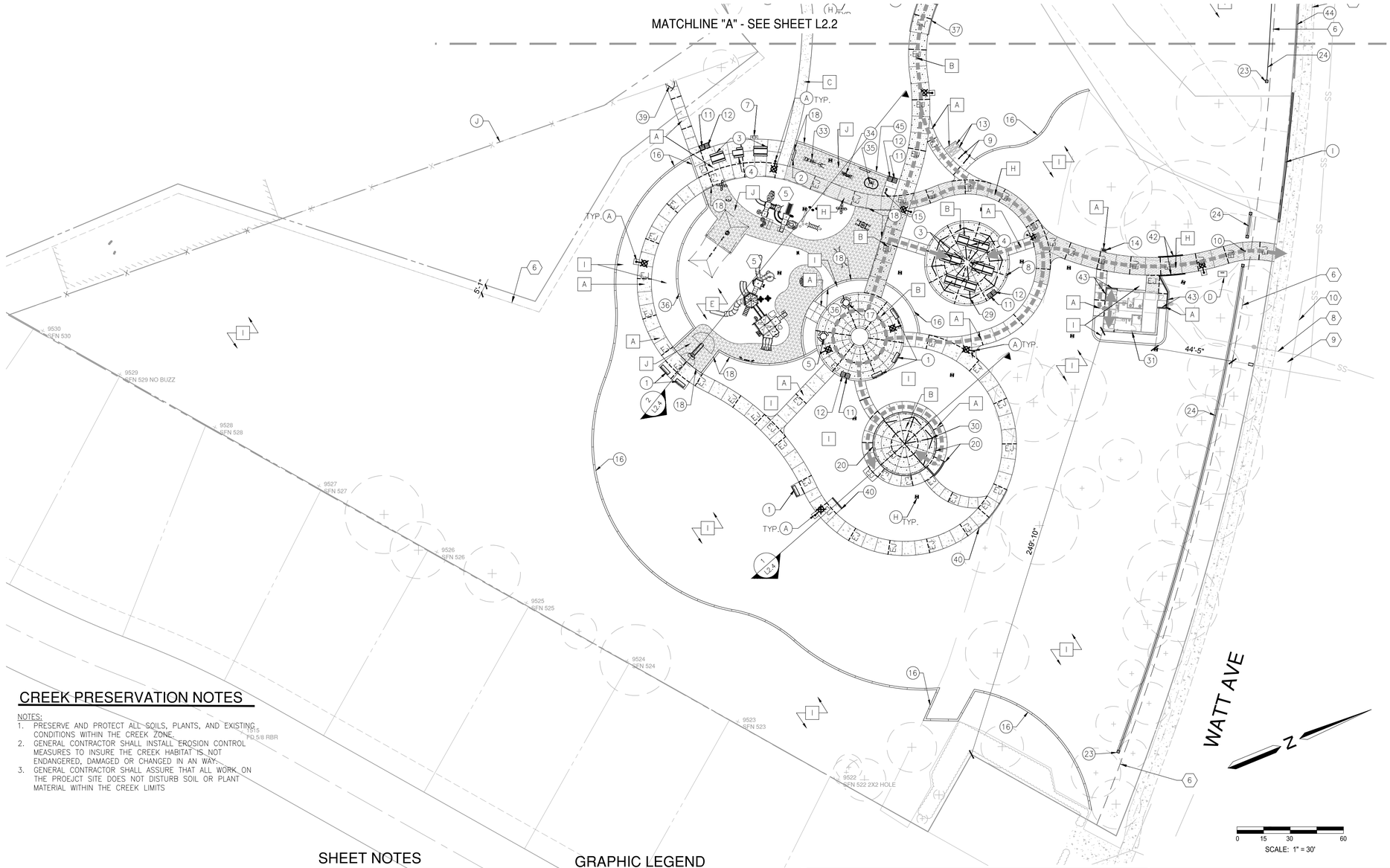

CREEK PRESERVATION NOTES

NOTES:

1. PRESERVE AND PROTECT ALL SOILS, PLANTS, AND EXISTING CONDITIONS WITHIN THE CREEK ZONE.
2. GENERAL CONTRACTOR SHALL INSTALL EROSION CONTROL MEASURES TO INSURE THE CREEK HABITAT IS NOT ENDANGERED, DAMAGED OR CHANGED IN AN WAY.
3. GENERAL CONTRACTOR SHALL ASSURE THAT ALL WORK ON THE PROEJCT SITE DOES NOT DISTURB SOIL OR PLANT MATERIAL WITHIN THE CREEK LIMITS

SHEET NOTES

1. BIOFILTRATION AREA WITH PLANTING, SEE 11/L6.0
2. COMMUNITY GARDEN
3. PARKING LOT
4. SIERRA CREEK
5. PLAY AREA
6. PUE
7. FUTURE PUE
8. SEWER LIME
9. WATER LINE
10. STORM DRAIN LINE

GRAPHIC LEGEND

- ACCESSIBLE ROUTE TO ADA FACILITY
- EXISTING TREE TO REMAIN
- PROPERTY LINE

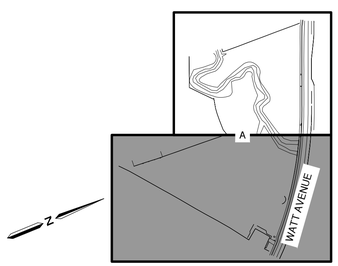

LOCATION MAP

1"=300'

REFERENCE SCHEDULE

ITEM	DESCRIPTION	REFERENCE
A	PATHWAY LIGHT POLE	SEE ELECTRICAL SHEETS
B	PARKING LOT LIGHT POLE	SEE ELECTRICAL SHEETS
C	VISION TRIANGLE	PER COUNTY STANDARD
D	REFER TO ELECTRICAL	SEE L2.2
E	SIERRA CREEK	
F	BIOSWALE	REFER TO CIVIL SHEETS
G	COMMUNITY GARDEN (FUTURE)	
H	DRAIN INLET	REFER TO CIVIL SHEETS
I	EXISTING WALL TO REMAIN	REFER TO TOPOGRAPHIC SURVEY
J	EXISTING FENCE AND GATES TO REMAIN	REFER TO TOPOGRAPHIC SURVEY
K	VAN ACCESSIBLE PARKING SIGN	SEE DETAIL 2 SHEET L6.4
L	ACCESSIBLE PARKING SIGN	REFER TO CIVIL SHEETS
M	LEFT TURN ONLY SIGN	REFER TO CIVIL SHEETS
N	PARKING LOT ENTRY SIGN	SEE DETAIL 1 SHEET L6.4

SITE FINISH SCHEDULE

(NOT ALL MAY APPEAR ON THIS SHEET)

FINISH	DESCRIPTION
A	CONCRETE PAVING
B	CONCRETE PAVING –INTEGRAL COLOR
C	DECOMPOSED GRANITE
D	ASPHALT PAVING (PARKING AND SERVICE ACCESS)
E	ENGINEERED WOOD FIBER
F	GRAVEL SERVICE ROAD
G	BARK MULCH
H	CONCRETE PAVING (VEHICULAR ACCESS)
I	PLANTING AREA, SEE PLANTING PLANS, SHEETS L5.0–L5.2
J	SAFETY SURFACING (PIP RUBBER)
K	COLORED CONCRETE (VEHICULAR ACCESS)

SITE FEATURE SCHEDULE

(NOT ALL MAY APPEAR ON THIS SHEET)

ITEM	DESCRIPTION / MODEL
1	BACKED BENCH 6' / MODEL # 424
2	BACKLESS BENCH 6' / MODEL # 402
3	PICNIC TABLE / MODEL # 101FSSK
4	PICNIC TABLE ADA / MODEL # 101FSSKRE
5	ROUND TABLE ADA / MODEL # 107AC
6	CUSTOM PARK SIGN
7	BBQ – SINGLE / MODEL # 21
8	BBQ – GROUP / MODEL # 24
9	BIKE RACK / MODEL # 292 (S–2)
10	BOLLARD – REMOVABLE / MODEL # 400–42–2–1SL
11	TRASH RECEPTACLE / MODEL # CE140MB–FP
12	RECYCLING RECEPTACLE / MODEL # CE140MB–FP
13	BIKE LOCKER / MODEL # VISI1–GRY14–REVB
14	PET STATION / MODEL # 1003A–L
15	DRINKING FOUNTAIN / MODEL # 440 SM W/ PET FOUNTAIN
16	CONCRETE MOW BAND – 12"
17	ROUND TABLE STANDARD MODEL #107
18	DEEPENED PLAYGROUND EDGE
19	NOT USED
20	CONCRETE RETAINING WALL AT AMPHITHEATER
21	CONCRETE SEATWALL ENTRY
22	BRIDGE 10' WIDE – CONNECTOR PEDESTRIAN TRUSS
23	PILASTER
24	FENCE – 4' TUBULAR STEEL WITH 18" CONCRETE MOW BAND
25	FENCE – 5' TUBULAR STEEL WITH 12" CONCRETE MOW BAND
26	GATE PEDESTRIAN – 5' TUBULAR STEEL
27	DOUBLE SWING FENCE – 5' TUBULAR STEEL
28	SHADE STRUCTURE (GARDEN) / MODEL # RAM12X22MR
29	SHADE STRUCTURE (PICNIC) / MODEL # OTC40MR
30	SHADE STRUCTURE (AMPHITHEATER) / MODEL # HHA32MR
31	RESTROOM BUILDING
32	INTERPRETIVE SIGNAGE
33	FITNESS EQUIPMENT – 3 PERSON STATIC COMBO
34	FITNESS EQUIPMENT – ELLIPTICAL CROSS TRAINER
35	FITNESS EQUIPMENT – SHOULDER WHEEL STRETCHING STATION
36	CONCRETE PERIMETER BAND AT EWF SURFACING
37	NOT USED
38	CULVERT
39	GATE
40	VERTICAL CURB / RETAINING WALL
41	PROPOSITION 68 SIGN
42	CURB WITH HANDRAIL
43	CONCRETE RETAINING WALL AT RESTROOM
44	6" TYPE C FREESTANDING CURB
45	CONCRETE BAND AT FITNESS AREA

Know what's **below.** **Call** before you dig.

Westwood
Westwood Professional Services, Inc.
6200 STONERIDGE MALL ROAD, SUITE 330
PLEASANTON, CA 94588
T: 925.223.8340
westwoodps.com

NO.	DESCRIPTION	DATE	BY	APP. DATE	APP.

ANTELOPE, CALIFORNIA

NHRPD SIERRA CREEK PARK

7781 WATT AVE
SITE FEATURES PLAN

DATE: 08/31/26
DRAFTER: TH, AL, CY
DESIGNER: KF, TH
CHECKED: KF, JG

PROJECT NO.
41541

LICENSED LANDSCAPE ARCHITECT
KARIN N. FOLSOM
Signature
03/31/27
Renewal Date
08/31/26
Date
STATE OF CALIFORNIA

L2.1

Last Saved by: MALoucinco
Plot Scale: 1:1 Plot Date: 8/26/2026 11:38 AM
Drawing: N:_ODE\Pleasanton\41541 NRHPD Sierra Creek Park\Landscape\Cons\Plans\41541-SF

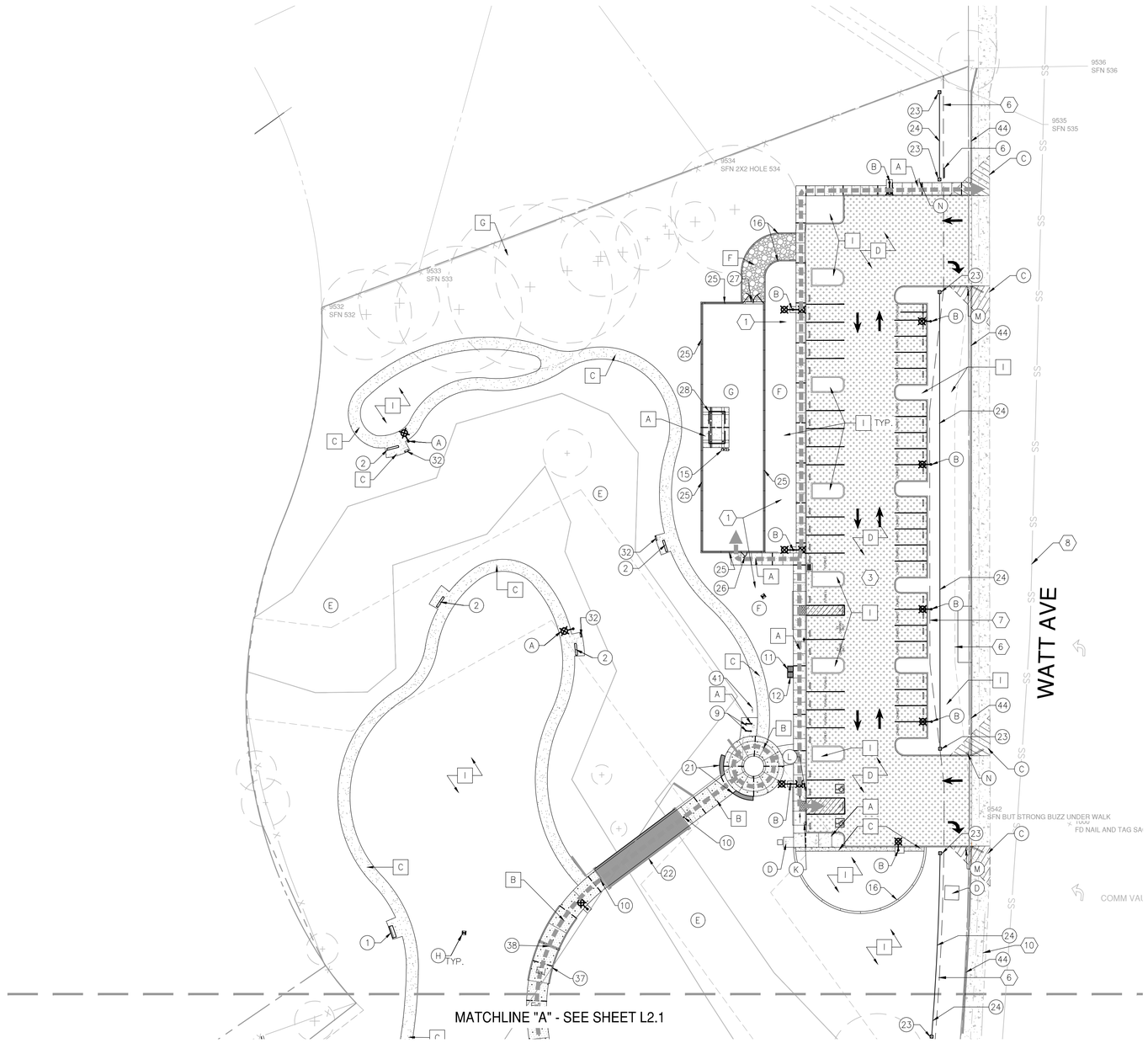

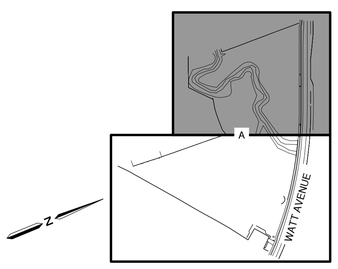

LOCATION MAP

1"=300'

SCALE: 1" = 30'

SITE FINISH SCHEDULE
(NOT ALL MAY APPEAR ON THIS SHEET)

FINISH	DESCRIPTION
A	CONCRETE PAVING
B	CONCRETE PAVING –INTEGRAL COLOR
C	DECOMPOSED GRANITE
D	ASPHALT PAVING (PARKING AND SERVICE ACCESS)
E	ENGINEERED WOOD FIBER
F	GRAVEL SERVICE ROAD
G	BARK MULCH
H	CONCRETE PAVING (VEHICULAR ACCESS)
I	PLANTING AREA, SEE PLANTING PLANS, SHEETS L5.0–L5.2
J	SAFETY SURFACING (PIP RUBBER)
K	COLORED CONCRETE (VEHICULAR ACCESS)

REFERENCE SCHEDULE

ITEM	DESCRIPTION	REFERENCE
A	PATHWAY LIGHT POLE	SEE ELECTRICAL SHEETS
B	PARKING LOT LIGHT POLE	SEE ELECTRICAL SHEETS
C	VISION TRIANGLE	PER COUNTY STANDARD
D	REFER TO ELECTRICAL	SEE L2.2
E	SIERRA CREEK	
F	BIOSWALE	REFER TO CIVIL SHEETS
G	COMMUNITY GARDEN (FUTURE)	
H	DRAIN INLET	REFER TO CIVIL SHEETS
I	EXISTING WALL TO REMAIN	REFER TO TOPOGRAPHIC SURVEY
J	EXISTING FENCE AND GATES TO REMAIN	REFER TO TOPOGRAPHIC SURVEY
K	VAN ACCESSIBLE PARKING SIGN	SEE DETAIL 2 SHEET L6.4
L	ACCESSIBLE PARKING SIGN	REFER TO CIVIL SHEETS
M	LEFT TURN ONLY SIGN	REFER TO CIVIL SHEETS
N	PARKING LOT ENTRY SIGN	SEE DETAIL 1 SHEET L6.4

GRAPHIC LEGEND

ACCESSIBLE ROUTE TO ADA FACILITY

EXISTING TREE TO REMAIN

PROPERTY LINE

SHEET NOTES

1. BIOFILTRATION AREA WITH PLANTING, SEE 11/L6.0
2. COMMUNITY GARDEN
3. PARKING LOT
4. SIERRA CREEK
5. PLAY AREA
6. PUE
7. FUTURE PUE
8. SEWER LINE
9. WATER LINE
10. STORM DRAIN LINE

SITE FEATURE SCHEDULE
(NOT ALL MAY APPEAR ON THIS SHEET)

ITEM	DESCRIPTION / MODEL
1	BACKED BENCH 6' / MODEL # 424
2	BACKLESS BENCH 6' / MODEL # 402
3	PICNIC TABLE / MODEL # 101FSSK
4	PICNIC TABLE ADA / MODEL # 101FSSKRE
5	ROUND TABLE ADA / MODEL # 107AC
6	CUSTOM PARK SIGN
7	BBQ – SINGLE / MODEL # 21
8	BBQ – GROUP / MODEL # 24
9	BIKE RACK / MODEL # 292 (S–2)
10	BOLLARD – REMOVABLE / MODEL # 400–42–2–1SL
11	TRASH RECEPTACLE / MODEL # CE140MB–FP
12	RECYCLING RECEPTACLE / MODEL # CE140MB–FP
13	BIKE LOCKER / MODEL # VISI1–GRY14–REVB
14	PET STATION / MODEL # 1003A–L
15	DRINKING FOUNTAIN / MODEL # 440 SM W/ PET FOUNTAIN
16	CONCRETE MOW BAND – 12"
17	ROUND TABLE STANDARD MODEL #107
18	DEEPENED PLAYGROUND EDGE
19	NOT USED
20	CONCRETE RETAINING WALL AT AMPHITHEATER
21	CONCRETE SEATWALL ENTRY
22	BRIDGE 10' WIDE – CONNECTOR PEDESTRIAN TRUSS
23	PILASTER
24	FENCE – 4' TUBULAR STEEL WITH 18" CONCRETE MOW BAND
25	FENCE – 5' TUBULAR STEEL WITH 12" CONCRETE MOW BAND
26	GATE PEDESTRIAN – 5' TUBULAR STEEL
27	DOUBLE SWING FENCE – 5' TUBULAR STEEL
28	SHADE STRUCTURE (GARDEN) / MODEL # RAM12X22MR
29	SHADE STRUCTURE (PICNIC) / MODEL # OTC40MR
30	SHADE STRUCTURE (AMPHITHEATER) / MODEL # HHA32MR
31	RESTROOM BUILDING
32	INTERPRETIVE SIGNAGE
33	FITNESS EQUIPMENT – 3 PERSON STATIC COMBO
34	FITNESS EQUIPMENT – ELLIPTICAL CROSS TRAINER
35	FITNESS EQUIPMENT – SHOULDER WHEEL STRETCHING STATION
36	CONCRETE PERIMETER BAND AT EWF SURFACING
37	NOT USED
38	CULVERT
39	GATE
40	VERTICAL CURB / RETAINING WALL
41	PROPOSITION 68 SIGN
42	CURB WITH HANDRAIL
43	CONCRETE RETAINING WALL AT RESTROOM
44	6" TYPE C FREESTANDING CURB
45	CONCRETE BAND AT FITNESS AREA

Know what's **below.**
Call before you dig.

Westwood
Westwood Professional Services, Inc.
6200 STONERIDGE MALL ROAD, SUITE 330
PLEASANTON, CA 94588
T: 925.223.8340
westwoodps.com

NO.	DESCRIPTION	DATE	BY	APP. DATE	APP.

ANTELOPE, CALIFORNIA

NHRPD SIERRA CREEK PARK
7781 WATT AVE
SITE FEATURES PLAN

DATE: 08/31/26
DRAFTER: TH, AL, CY
DESIGNER: KF, TH
CHECKED: KF, JG

PROJECT NO.
41541

LICENSED LANDSCAPE ARCHITECT
KAREN N. FOLSOM
Signature
03/31/27
Renewal Date
08/31/26
Date
STATE OF CALIFORNIA

L2.2

Last Saved by: MALucero
Plot Date: Wednesday, September 17, 2025 11:39 AM
Drawing: N:_CDE\Pleasanton\41541 NRHPD Sierra Creek Park\Landscape\Const\Plans\41541-SF

PLAYGROUND FEATURE SCHEDULE

ITEM	DESCRIPTION / MODEL	COLOR	QUANTITY	MANUFACTURER/SUPPLIER/CONTACT INFORMATION	DET.REF.
1	XSCAPE 2-BAY SWING	SEE BELOW	1	MRC RECREATION / RDU/ 800-922-0070	PER MANUF.
2	ARCH SWING (GALV)		1	MRC RECREATION / 5058/ 800-922-0070	
3	INCLUSIVE SEESAW		1	MRC RECREATION / 6299 / 800-922-0070	
4	CUSTOM PRIMETIME PLAY STRUCTURE (2-5 YRS)		1	MRC RECREATION / RDU / 800-922-0070	
5	TURTLE SPRING RIDER		1	MRC RECREATION / 6284I / 800-922-0070	
6	CUSTOM POWERSCAPE PLAY STRUCTURE (5-12 YRS)		1	MRC RECREATION / RDU / 800-922-0070	
7	VISTATREE TOP 1		1	MRC RECREATION / 5958SP / 800-922-0070	
8	ROCKIN' ROBIN		1	MRC RECREATION / 38020 / 800-922-0070	
9	64" ROLLERSLIDE W/ EXIT TRANSFER BENCH	TBD	1	LANDSCAPE STRUCTURES / CP006960 / 707-538-3800	
10	SHADOW PLAY FLOWER	SEE BELOW	1	MRC RECREATION / FREENOTES / 800-922-0070	
11	MUSICAL EQUIPMENT (CATERPILLAR, FLOWER, BUTTERFLY)	CATERPILLAR- FLOWER- TURQUOISE BUTTERFLY- ORANGE			

GENERAL NOTES

1. GENERAL CONTRACTOR SHALL COORDINATE INSTALLATION OF PLAY EQUIPMENT AND SAFETY SURFACING WITH OTHER WORK OF GRADING, CONCRETE, AND UTILITY INSTALLATIONS.
2. CONTRACTOR TO LAYOUT PLAY EQUIPMENT AND VERIFY FALL ZONES PRIOR TO INSTALLATION OF FOOTINGS AND PERIMTER HARDSCAPE.
3. POURED-IN-PLACE RUBBER SAFETY SURFACING TO INCLUDE ALIPHATIC BINDER.

COLOR SELECTION EXHIBIT

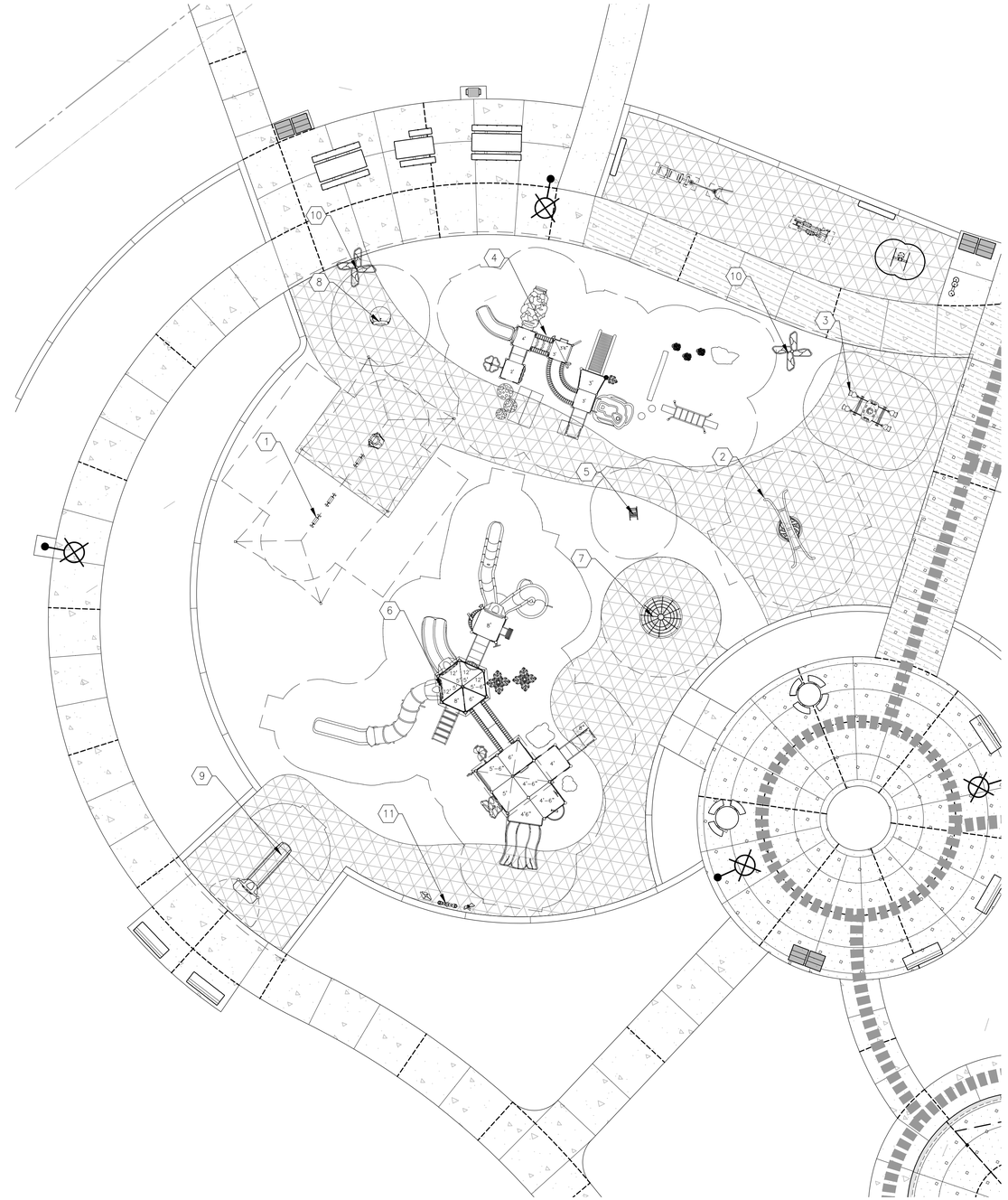
1
2
3
4
5
6
7
8
9
10
11
4'-6"
4'-6"
4'-6"

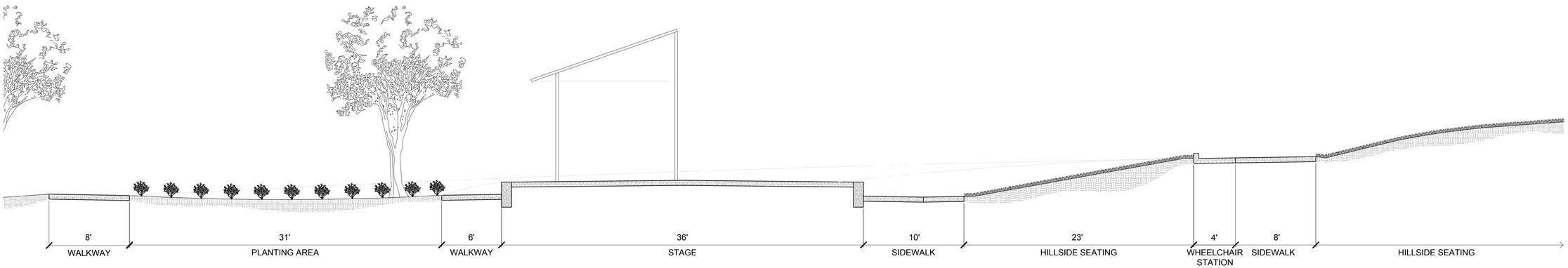

1 AMPHITHEATER SECTION

1" = 5'-0"

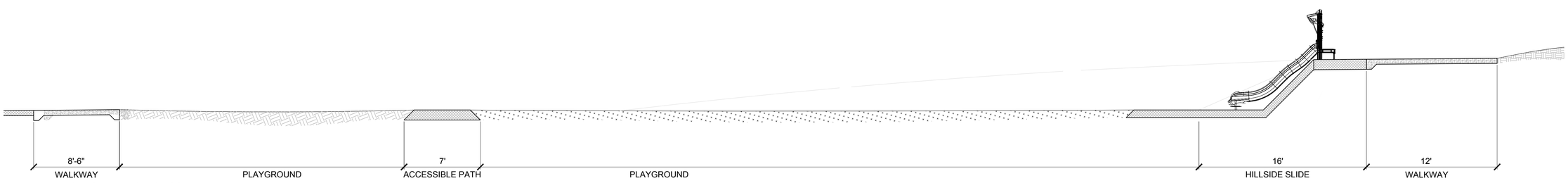

2 PLAYGROUND SECTION

1"=5'-0"

1. CONCRETE WALKWAY
2. 12" DEEPENED CONCRETE MOW BAND
3. POUR-IN-PLACE RUBBER SURFACING
4. ENGINEERED WOOD FIBAR
5. PLANTING AREA

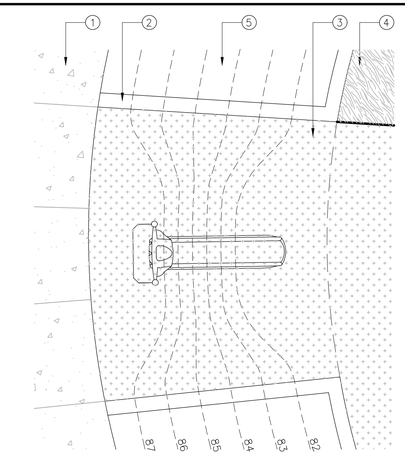

3 SLIDE GRADING ENLARGEMENT

NOT TO SCALE

811 Know what's below. Call before you dig.

Last Saved by: ALiao
Plot Date: Wednesday, 8/20/2026 9:03 AM
Drawing: N:_CIDE\Pleasanton\41541 NRHPD Sierra Creek Park\Landscape\ConstPlans\41541-SF

Westwood
Westwood Professional Services, Inc.
6200 STONERIDGE MALL ROAD, SUITE 330
PLEASANTON, CA 94588
T: 925.223.8340
westwoodps.com

NO.	DESCRIPTION	DATE	BY	APP. DATE	APP.

ANTELOPE, CALIFORNIA

NHRPD SIERRA CREEK PARK

7781 WATT AVE

SECTIONS & ELEVATIONS PLAN

DATE: 08/31/26
DRAFTER: TH, AL, CY
DESIGNER: KF, TH
CHECKED: KF, JG

PROJECT NO.
41541

LICENSED LANDSCAPE ARCHITECT
KARIN N. FOLSOM
Signature
03/31/27
Renewal Date
08/31/26
Date
STATE OF CALIFORNIA

L2.4

1. CONCRETE WALKWAY ADJACENT TO PARKING
2. BIORETENTION SOIL MEDIA. MINIMUM 18"
3. WATER-PROOF LINER
4. 9" GRAVEL LAYER, AASHTO #8 COURSE AGGREGATE
5. NON-WOVEN GEOTEXTILE MEMBRANE TO ALLOW INFILTRATION
6. UNCOMPACTED NATIVE SOIL
7. COMMUNITY GARDEN FENCE AND MOWCURB, REFER TO DETAIL 3, SHEET L6.0 AND DETAIL 1, SHEET L6.2
8. SANDY LOAM TOP LAYER MINIMUM 6" DEEP

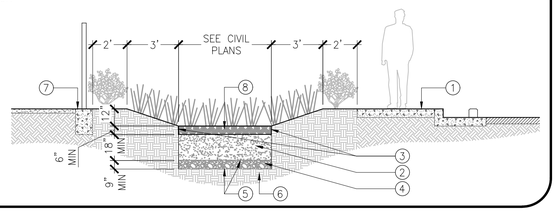

10 BIORETENTION SWALE

NOT TO SCALE

1. PLAYGROUND WALL WITH TROWEL FINISH (P.C. CONCRETE, 5 SACK CRUSHED AGGREGATE 3/4" MAX @ 2500 PSI) AS SHOWN ON PLANS
2. FINISHED GRADE, PLANTING AREA
3. #4 REBAR @ 24" O.C., 3" CLR ON ALL SIDES
4. #4 REBAR TOP AND BOTTOM CONTINUOUS
5. SURFACING PER PLANS: P.I.P. RUBBERIZED PLAY SURFACING, SEE DETAIL 9 ON THIS SHEET, OR EWF SURFACING, SEE DETAIL 8 ON THIS SHEET
6. 3/4" MAX AGGREGATE BASE COMPACTED TO 90% MIN RELATIVE COMPACTION
7. PROCESS AND PREPARE SUBGRADE PER GEOTECHNICAL RECOMMENDATIONS.

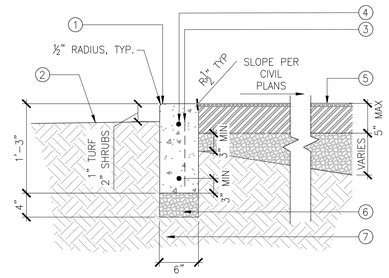

6 PLAYGROUND PERIMETER BAND AT P.I.P. RUBBER SURFACING OR EWF SURFACING

NOT TO SCALE

1. FINISH SURFACE OF CONCRETE WITH PORTLAND CEMENT CONCRETE, 5 SACK CRUSHED AGGREGATE 3/4 MAX 3500 PSI. SEE SITE FEATURES SCHEDULE AND PLANS FOR CONCRETE COLOR & FINISH.
2. CONTROL JOINT. SEE DETAIL 2 ON THIS SHEET. (LOCATIONS PER PLAN)
3. EXPANSION JOINT. SEE DETAIL 2 ON THIS SHEET.
4. CLASS II AGGREGATE BASE COURSE COMPACT TO 90% MIN PER ASTM D1557
5. PROCESS AND PREPARE SUBGRADE PER GEOTECHNICAL RECOMMENDATIONS
6. #3 REBAR B.W. 16" O.C.

NOTES:
A. REFER TO GEOTECHNICAL REPORT FOR RECOMMENDATIONS.
B. FOR VEHICULAR CONCRETE SECTION TO BE 6" OVER 6' OF BASE.
C. FINISH SURFACE OF CONCRETE WITH MEDIUM BROOM FINISH PERPENDICULAR TO PATH OF TRAVEL.

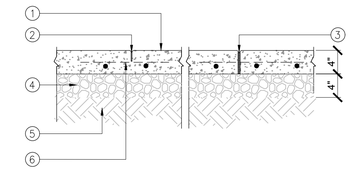

1 CONCRETE PAVING (PEDESTRIAN AND VEHICULAR)

NOT TO SCALE

1. BIKE RACK TYPE PER SITE FURNISHING LEGEND
2. CONCRETE FLATWORK SEE DETAIL 1, THIS SHEET
3. USE 1/2" x 3-3/4" EXPANSION ANCHOR BOLTS PROVIDED BY MANUFACTURER
4. S-2 SURFACE MOUNT PER MANUFACTURER

NOTE:
A. INSTALL PER MANUFACTURER'S RECOMMENDATIONS.

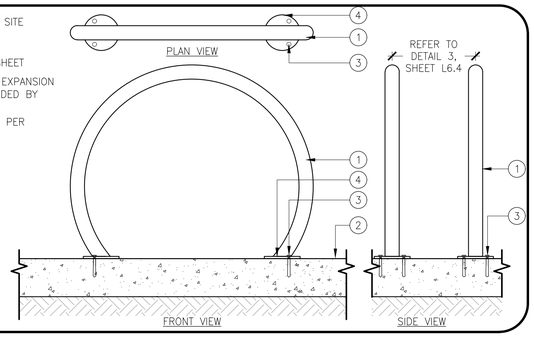

11 BIKE RACK

NOT TO SCALE

1. ENGINEERED WOOD FIBER
2. WEAR LAYER (1/2" MIN.), COLOR PER PLAN. INSTALL PER MANUFACTURERS RECOMMENDATION
3. CUSHION LAYER PER MANUFACTURER
4. CLASS II AGGREGATE BASE @ 90% MIN RELATIVE COMPACTION
5. 8 OZ./SQ YD NON WOVEN GEO-TEXTILE FABRIC.
6. CONCRETE CURB
7. PROCESS AND PREPARE SUBGRADE PER GEOTECHNICAL RECOMMENDATIONS.

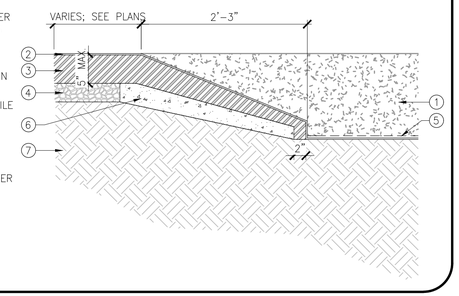

7 POUR-IN-PLACE RUBBER SURFACING INTO ENGINEERED WOOD FIBER

NOT TO SCALE

1. ELASTOMERIC SEALANT, MATCH TO COLOR OF CONCRETE (SEE SPECIFICATIONS).
2. BACKER ROD
3. DOWEL, 1/2" DIA X 1'0" @ 2'0" O.C. GREASE SLEEVE ONE END.
4. 3/8" ASPHALTIC IMPREGNATED EXPANSION JOINT
5. SEE DETAIL 1 THIS SHEET FOR CONCRETE DEPTH AND SUB-GRADE PREPARATION.
6. TOOLED CONTROL JOINT, 1/4" DEEP.

NOTE:
A. FINISH SURFACE OF CONCRETE WITH MEDIUM BROOM FINISH PERPENDICULAR TO PATH OF TRAVEL.

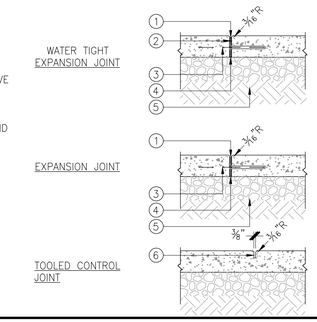

2 EXPANSION JOINTS / SCORE JOINTS

NOT TO SCALE

1. PROCESS AND PREPARE SUBGRADE PER GEOTECHNICAL RECOMMENDATIONS.
2. CONCRETE PAVING, SEE DETAIL 1, THIS SHEET
3. THICKENED EDGE WHERE SHOWN ON PLAN
4. #4 REBAR 24" O.C. (EXTEND INTO SLAB MIN 12" BEND AND EXTEND 3" FROM BOTTOM OF CURB)
5. PLAY AREA CURB AS SHOWN ON PLAN.
6. 2-#4 REBAR TOP AND BOTTOM CONTINUOUS, 3" CLEAR FROM ALL EDGES
7. 1/2" RADIUS TYPICAL
8. ENGINEERED WOOD FIBER
9. 8 OZ./SQ YD NON WOVEN GEO-TEXTILE FABRIC.
10. CONCRETE PLAYGROUND CURB SHALL OMIT ADJACENT CONCRETE PAVEMENT AND EXTENSION OF REBAR INTO ADJACENT PAVEMENT WHERE ADJACENT TO PLANTING AREA.
11. 3/4" MAX AGGREGATE BASE COMPACTED TO 90% MIN RELATIVE COMPACTION

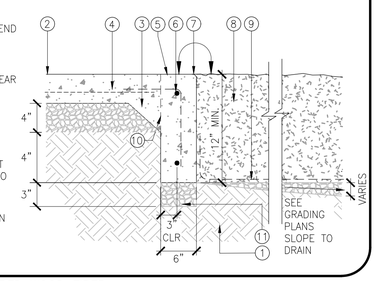

8 CONCRETE PLAYGROUND EDGE AT ENGINEERED WOOD FIBER

NOT TO SCALE

1. PORTLAND CEMENT CONCRETE, 5 SACK CRUSHED AGGREGATE 3/4" MAX @ 2500 PSI.
2. #3 REBAR CONTINUOUS
3. 1/2" RADIUS, TYPICAL
4. CLASS II AGGREGATE BASE COMPACTED @ 90% MIN RELATIVE COMPACTION
5. PROCESS AND PREPARE SUBGRADE PER GEOTECHNICAL RECOMMENDATIONS

NOTES:
A. 3/8" ASPHALT IMPREGNATED EXPANSION JOINTS SHALL BE PLACED @ 20' O.C. TRIM 1/4" BELOW FINISH SURFACE, TYPICAL.
B. CONTROL JOINTS SHALL BE PLACED @ 10' O.C., TYPICAL.

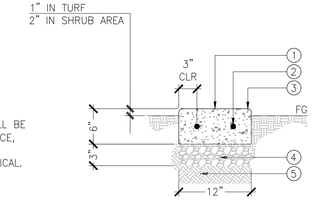

3 12" CONCRETE MOW CURB

NOT TO SCALE

1. CONCRETE CURB
2. 1" RADIUS ON BOTH SIDES
3. #4 VERTICAL REBAR @ 16" O.C.
4. (3) #4 HORIZONTAL REBAR CONTINUOUS. 3" CLEAR ON ALL SIDES.

NOTE:
A. FOOTING EXCAVATIONS SHALL BE CLEAN, UNIFORM AND UNYIELDING AT BOTTOM OF FOOTING.

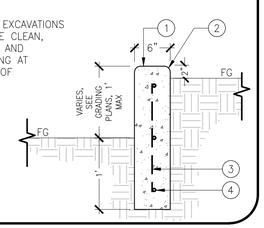

12 6" VERTICAL CURB AT FG

NOT TO SCALE

1. FREESTANDING TYPE 3' CONCRETE CURB, PER COUNTY STANDARD
2. 1" RADIUS ON BOTH SIDES
3. CONCRETE SIDEWALK
4. SHRUB PLANTING AREA WITH BARK MULCH

NOTE:
A. FOOTING EXCAVATIONS SHALL BE CLEAN, UNIFORM AND UNYIELDING AT BOTTOM OF FOOTING.

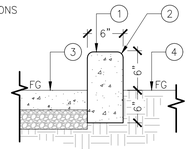

13 6" FREESTANDING CURB AT SIDEWALK

NOT TO SCALE

1. CONCRETE PAVEMENT WITH DEEPENED EDGE.
2. 3" MINIMUM CLASS II AGGREGATE BASE, COMPACTED TO 95% RELATIVE COMPACTION. SLOPE TO DRAIN.
3. THICKENED EDGE AND CONCRETE PAVING WHERE SHOWN ON PLAN.
4. #4 REBAR 24" O.C. (EXTEND INTO SLAB MIN 12" BEND AND EXTEND 3" FROM BOTTOM OF CURB)
5. PLAY AREA CURB (P.C. CONCRETE, 5 SACK 3/4" MAX CRUSHED AGGREGATE @ 2500 PSI)
6. 2-#4 REBAR TOP AND BOTTOM CONTINUOUS
7. WEAR LAYER (1/2" MIN.), FLUSH WITH CONCRETE CURB. COLOR PER PLANS. INSTALL PER MANUFACTURERS RECOMMENDATION.
8. CUSHION LAYER, VERIFY THICKNESS WITH PLAY STRUCTURE MANUFACTURER'S RECOMMENDATIONS.
9. PROCESS AND PREPARE SUBGRADE PER GEOTECHNICAL RECOMMENDATIONS.

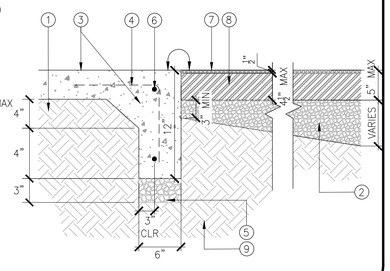

9 CONCRETE PAVEMENT WITH DEEPENED EDGE AT POUR-IN-PLACE RUBBER SURFACING

NOT TO SCALE

1. DG COURSE. GRANITECRETE - REFER TO MANUFACTURER SPECIFICATIONS
2. PLANTING AREA
3. AGGREGATE BASE. SEE MANUFACTURER SPEC.
4. PROCESS AND PREPARE SUBGRADE PER GEOTECHNICAL RECOMMENDATIONS.

NOTES:
REFER TO SPECIFICATIONS TAMPED/ROLLED EDGE AT GRANITECRETE EDGE, PER INSTALLATION SPEC.

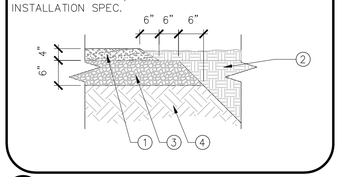

5 STABILIZED DECOMPOSED GRANITE

NOT TO SCALE

1. CLASS II AGGREGATE BASE ROCK
2. ADJACENT LANDSCAPE
3. 8 OZ. NON WOVEN GEOTEXTILE FABRIC
4. PROCESS AND PREPARE SUBGRADE PER GEOTECH RECOMMENDATIONS
5. PORTLAND CEMENT CONCRETE, 5 SACK CRUSHED AGGREGATE 3/4" @ 2500 PSI.
6. 1/2" RADIUS, TYP.
7. #3 REBAR CONTINUOUS

NOTES:
A. 3/8" ASPHALT IMPREGNATED EXPANSION JOINTS SHALL BE PLACED @ 20' O.C. TRIM 1/4" BELOW FINISH SURFACE, TYPICAL.
B. CONTROL JOINTS SHALL BE PLACED @ 10' O.C., TYPICAL.

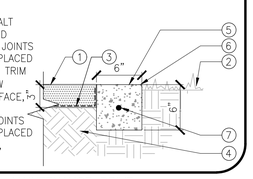

4 GRAVEL MAINTENANCE DRIVE

NOT TO SCALE

811 Know what's below. Call before you dig.

Westwood
Westwood Professional Services, Inc.
8200 STONERIDGE MALL ROAD, SUITE 330
PLEASANTON, CA 94588
T: 925.223.8340
westwoodps.com

NO.	DESCRIPTION	DATE	BY	APP. DATE	APP.

ANTELOPE, CALIFORNIA

NHRPD SIERRA CREEK PARK
7781 WATT AVE
CONSTRUCTION DETAILS

DATE: 08/31/26
DRAFTER: TH, AL, CY
DESIGNER: KF, TH
CHECKED: KF, JG
PROJECT NO. 41541

LICENSED LANDSCAPE ARCHITECT — KAREN N. FOLSOM — STATE OF CALIFORNIA
Signature
03/31/27
Renewal Date
08/31/26
Date

L6.0

Last Saved by: MALoucenco
Plot Date: Wednesday, August 12, 2026 10:39 AM
Drawing: N:_CIVil\Pleasanton\41541 NHRPD Sierra Creek Park\Landscape\ConstPlans\41541-DT

1. P.I.P. COLORED CONCRETE WALL. CONCRETE TO BE A SMOOTH CONSISTENT SURFACE FREE OF AIR POCKETS AND BLEMISHES ON ALL VISIBLE FACES. FINISH: TOPCAST 5 SURFACE RETARDER. REFER TO SPECIFICATIONS.
2. STAGE. SEE CONCRETE PAVING DETAIL 1, SHEET L6.0.
3. DOWEL WITH SLEEVE – 3/8" DOWEL
4. #4 REBAR VERT. ALT BENDS @ 12" O.C. TYP.
5. (2) #4 HOR. REBAR @ 16" O.C. TYP.
6. 3" CLASS II AGGREGATE, COMPACTED PER GEOTECHNICAL REPORT RECOMMENDATIONS
7. PROCESS AND PREPARE SUBGRADE PER GEOTECHNICAL RECOMMENDATIONS.
8. CONCRETE RAMP TO STAGE
9. EXPANSION JOINT. SEE DETAIL 2 SHEET L6.0
10. FINISH GRADE. ADJACENT LANDSCAPE
11. CONCRETE. SEE DETAIL 1 SHEET L6.0.

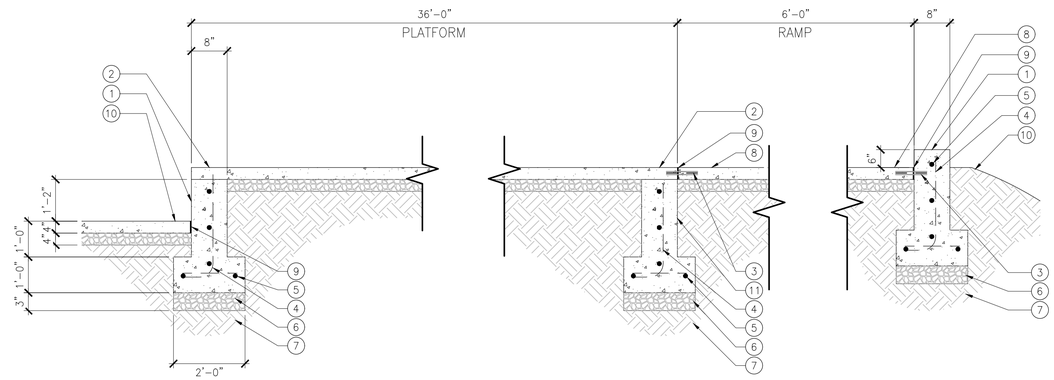

3 AMPHITHEATER STAGE & RETAINING WALLS

1/2"=1'-0"

1. CONCRETE WALL
2. 6" CURB w/ #3 CONTINUOUS HORIZONTAL REBAR
3. 15" CULVERT PIPE
4. AGGREGATE BASE
5. PROCESS AND PREPARE SUBGRADE PER GEOTECHNICAL RECOMMENDATIONS.
6. #4 EA WAY, TYP HORIZONTAL REBAR @16" O.C.
7. #3 REBAR HORIZONTAL @ 16" O.C. EA WAY TYP.
8. EXPANSION JOINT
9. FINISH GRADE OF SWALE
10. FINISH GRADE OF WALKWAY
11. #4 REBAR VERT. @ 16" O.C. W/ 8" HOOK AT BOTTOM WHERE TOP OF CURB TO BOTTOM OF FOOTING EXCEEDS 1'-6"

1. REFER TO CIVIL GRADING PLAN FOR MORE INFORMATION.
2. CONTRACTOR TO FIELD VERIFY EXISTING CONDITIONS AND SUBMIT SHOP DRAWINGS PRIOR TO INSTALLATION.

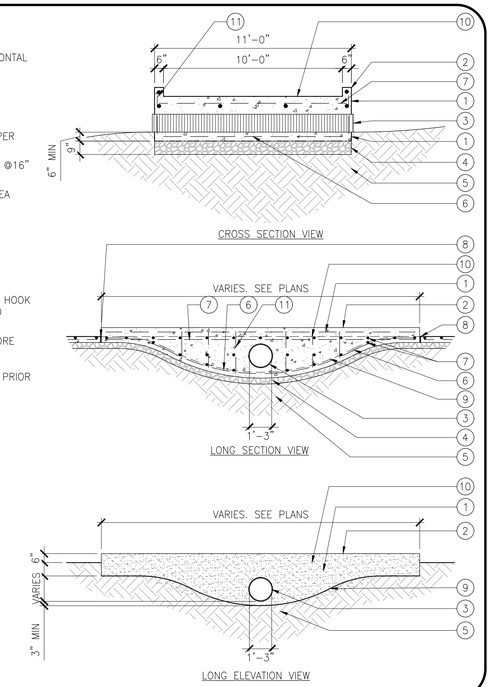

1 CONCRETE CULVERT

NOT TO SCALE

1. CONCRETE P.I.P. WALL COLOR AND FINISH SEE SITE FEATURES SCHEDULE
2. 3/4" DEEP BY 3" WIDE SKATE DETERRENT GROOVES, EVENLY SPACED
3. CONCRETE PAVEMENT
4. CONCRETE FOOTING
5. #4 HOR. REBAR @ 8" O.C. TYP.
6. 3" CLASS II AGGREGATE, COMPACTED TO 90% MIN RELATIVE COMPACTION
7. PROCESS AND PREPARE SUBGRADE COMPACTED PER GEOTECH REPORT
8. EXPANSION JOINT
9. #4 REBAR VERT. ALT BENDS @ 16" O.C. TYP.
10. ADJACENT PLANTING AREA

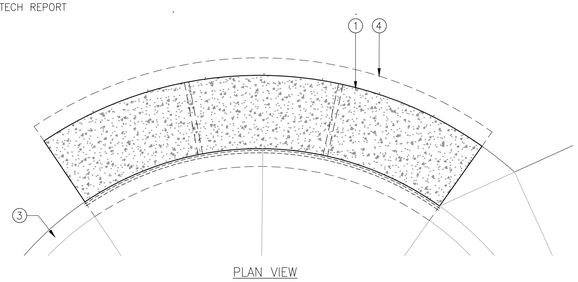

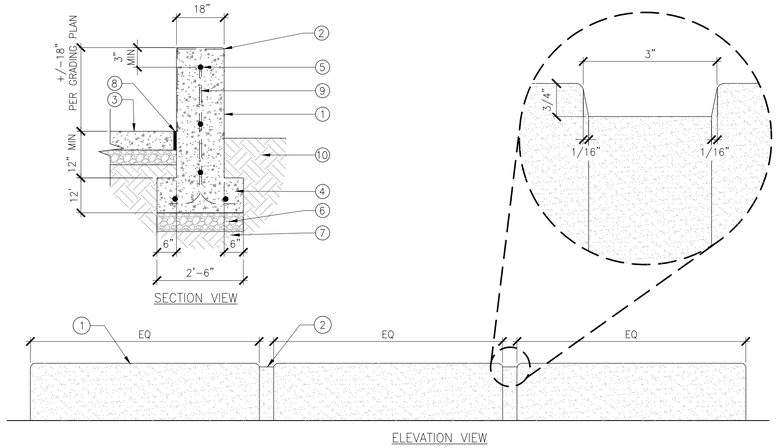

4 CURVED CONCRETE SEATWALL

1/2"=1'-0"

1. POUR-IN-PLACE RUBBER SURFACING ON EMBBANKMENT, SEE DETAIL 9, SHEET L6.0 (SEE SITE FINISHES SCHEDULE FOR ADDITIONAL INFORMATION).
2. 6" WIDE FOOTING
3. PROCESS AND PREPARE SUBGRADE PER GEOTECHNICAL REPORT RECOMENDATIONS
4. POUR-IN-PLACE RUBBER SURFACING ON EMBBANKMENT, SEE DETAIL 9, SHEET L6.0 (SEE SITE FINISHES SCHEDULE FOR ADDITIONAL INFORMATION).
5. CONCRETE SLURRY W/ #3 REBAR @ 16" O.C. EACH WAY, AS SHOWN
6. EXCAVATIONS SHALL BE CLEAN, UNIFORM AND UNYIELDING AT BOTTOM OF FOUNDATION

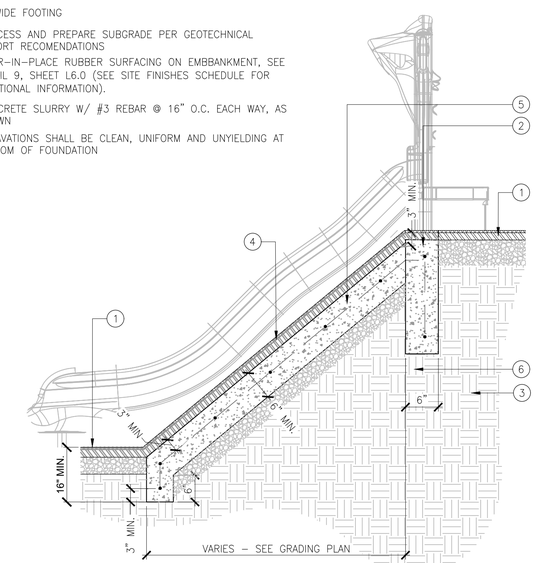

2 SLIDE SECTION

NOT TO SCALE

1. 1-1/2" STD. PIPE (1.9" O.D.) STEEL HANDRAIL (HORIZONTAL AND VERTICAL) FILET WELD AND GRIND SMOOTH ALL CONNECTIONS AND BENDS, EASE ENDS. SMOOTH GALVANIZED FINISH
2. 2" DIA. STEEL POSTS WITH 3" SQUARE PLATE. EMBED POSTS WITH NON-SHRINK GROUT INTO EXISTING POST HOLES FOR STABILITY.
3. CONCRETE RAMP
4. 6" CURB
5. CLASS 2 AGGREGATE BASE AT 95% RELATIVE COMPACTION
6. COMPACTED SUBGRADE
7. PLANTING AREA
8. EXPANSION JOINT

NOTES:
CONTRACTOR TO PROVIDE SHOP DRAWINGS PRIOR TO MANUFACTURER AND INSTALLATION. FILED VERIFY CONDITIONS, AND PROVIDE ELEVATIONS OF HANDRAIL WITH EQUALLY SPACED POSTS NO MORE THAN 48" O.C.

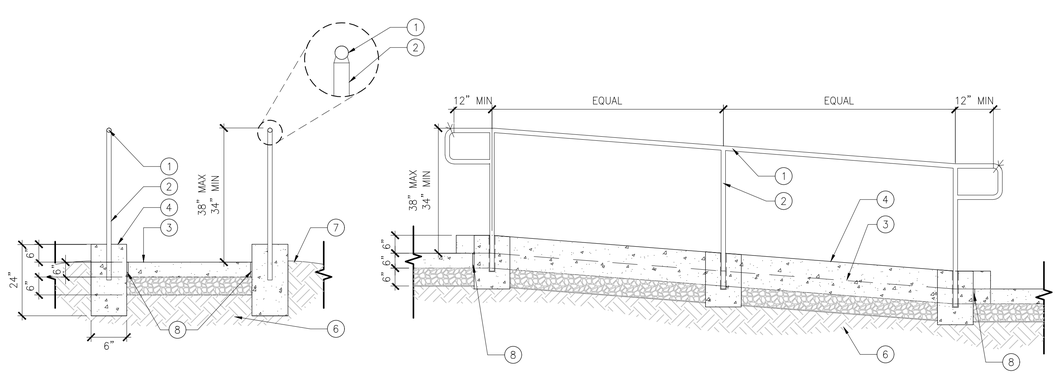

5 HANDRAIL & CURB AT RAMP

1/2"=1'-0"

Know what's **below.**
Call before you dig.

Westwood
Westwood Professional Services, Inc.
6200 STONERIDGE MALL ROAD, SUITE 330
PLEASANTON, CA 94588
T: 925.223.8340
westwoodps.com

NO.	DESCRIPTION	DATE	BY	APP. DATE	APP.

ANTELOPE, CALIFORNIA

NHRPD SIERRA CREEK PARK

7781 WATT AVE CONSTRUCTION DETAILS

DATE: 08/31/26
DRAFTER: TH, AL, CY
DESIGNER: KF, TH
CHECKED: KF, JG

PROJECT NO. 41541

LICENSED LANDSCAPE ARCHITECT
KARIN N. FOLSOM
Signature
03/31/27
Renewal Date
08/31/26
Date
STATE OF CALIFORNIA

L6.1

Last Saved by: MALoucinco
Plot Date/Time: 8/26/2026 1:27 PM
Drawing: N:_CIDE\Pleasanton\41541 NHRPD Sierra Creek Park\Landscape\ConstPlans\41541-DT

1. CUSTOM CONCRETE PARK ENTRY SIGN. SEE SITE FEATURES SCHEDULE.
2. 2 1/2" CAST IN LETTERING–PAINTED (PPG 1138–7) MIDNIGHT CLOVER
3. 5 1/4" CAST IN LETTERING–PAINTED (PPG 1138–7) MIDNIGHT CLOVER
4. SIGN FACE INSET 1" FROM SIGN PANEL
5. CONCRETE FOOTING, 3,500 PSI MIN. MIN. FOOTING DIMENSIONS FOR REFERENCE ONLY. INSTALL PER MANUFACTURER'S RECOMMENDATIONS.
6. MOUNTING HOLES (GROUT POCKETS), MIN 3" IN DIAMETER.
7. ANCHORE PIPE, INSTALL PER MANUFACTURER'S RECOMMENDATIONS.

NOTES:
1. TEXTURE–SMOOTH
2. COLOR– ODC SAN DIEGO BUFF
3. SEALER– STANDARD ACRYLIC
4. CONTRACTOR TO PROVIDE SHOP DRAWING FOR APPROVAL PRIOR TO PROCUREMENT.
5. CONTRACTOR TO INSTALL SIGN PER MANUFACTURER'S RECOMMENDATIONS.

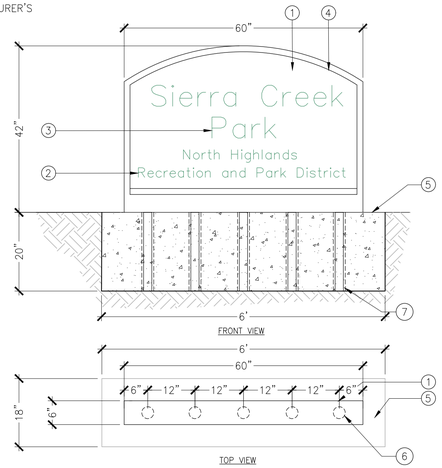

6 PARK SIGN

NOT TO SCALE

1. CONCRETE PAD, SEE DETAIL 1 ON SHEET L6.0
2. DRINKING FOUNTAIN, SEE MODEL ON SITE FEATURES SCHEDULE
3. WHEELCHAIR ACCESSIBLE ARM, 17–19" DEPTH PER CBC TITLE 24 11B
4. CLEAR FLOOR SPACE OF 30" X 48" TO COMPLY WITH CBC TITLE 24 11B
5. PET BOWL
6. 3/4" THD. GALVANIZED SUPPLY LINE
7. CONCRETE VALVE BOX WITH METAL LOCKING LID.
8. BRONZE BALL VALVE (LINE SIZE)
9. DRYWELL
10. PVC SEWER LINE AND FITTINGS
11. PVC MIP ADAPTER
12. WATER SUPPLY LINE
13. NON WOVEN GEO–TEXTILE FABRIC – 8 OZ./SQUARE YARD. OVERLAP MIN. 1'

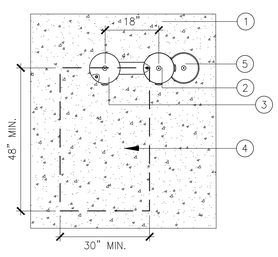

CLEAR FLOOR SPACE

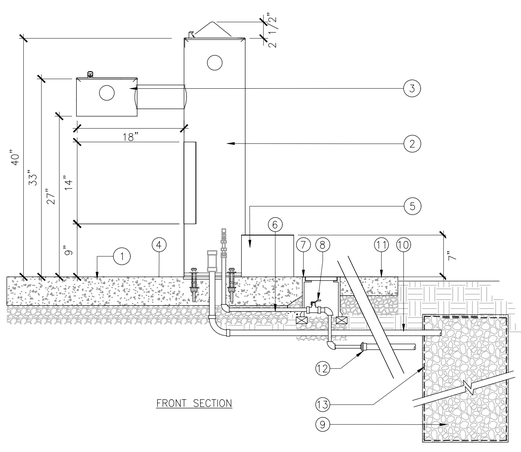

FRONT SECTION

7 MDF MODEL# SMFA 440 – ADA DRINKING FOUNTAIN WITH PET BOWL

NOT TO SCALE

1. 1–1/2" SQ. TOP RAIL
2. 3/4" TUBULAR STEEL PICKETS AT 3⅞" O.C., TYP.
3. 2" SQ. POST AT 8' O.C., W/CAP, TYP.
4. 1–1/2" SQ. MIDDLE RAIL
5. 1–1/2" SQ. BOTTOM RAIL
6. FINISH GRADE (SOIL)
7. CONCRETE FOOTING AT ALL POSTS. 3000 PSI CONCRETE MIN. FOOTING DIMENSIONS FOR REFERENCE ONLY. INSTALL PER MANUFACTURER'S RECOMMENDATIONS.
8. UNDISTURBED EARTH
9. 18" WIDE CONCRETE BAND. REFER TO DETAIL 3, SHEET L6.0. (SIM)

NOTES:
A. ALL FENCE PARTS TO BE TUBULAR STEEL.
B. GRIND SMOOTH ALL WELDS.
C. PRIME AND APPLY 2 COATS OF BLACK PAINT.
D. ALL PAINT AND PRIMER SHALL BE APPLIED TO CLEAN SURFACES IN 5 MIL. COATS.
E. FIELD VERIFY ALL DIMENSIONS PRIOR TO CONSTRUCTION.

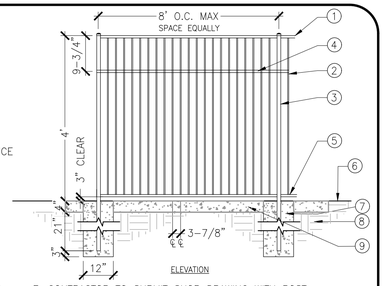

F. CONTRACTOR TO SUBMIT SHOP DRAWING WITH POST SPACING SHOWN IN ELEVATION.

4 4' TUBULAR STEEL FENCE

NOT TO SCALE

1. PRECAST CONCRETE CAP. COLOR TO MATCH PARK SIGNAGE
2. 3/8" MORTAR JOINT COLOR TO MATCH PILASTER CAP.
3. #4 HOR. REBAR CLOSED TIE @ 12" O.C. TYP.
4. (4) #4 REBAR VERT. ALT BENDS
5. POURED–IN–PLACE CONCRETE WITH TOPCAST 05 FINISH, COLOR TO MATCH SIGNAGE
6. CONCRETE BAND, REFER TO DETAIL 3/L6.0
7. FINISHED GRADE
8. CONCRETE FOOTING
9. 3" CLASS II AGGREGATE, COMPACTED TO 95% RELATIVE COMPACTION PER GEOTECH REPORT
10. SUBGRADE COMPACTED TO 95% RELATIVE DENSITY. PER GEOTECH REPORT
11. 4' TUBULAR STEEL FENCE, REFER TO DETAIL 4, SHEET L6.2
12. FENCE POST

NOTE:
A. CONTRACTOR TO PROVIDE SHOP DRAWINGS.

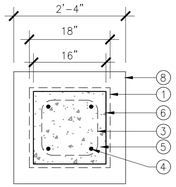

PLAN VIEW

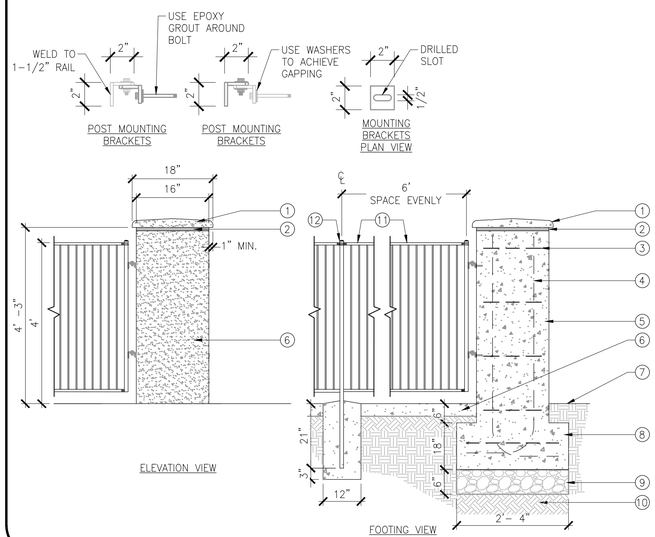

5 PILASTER

NOT TO SCALE

1. 1–1/2" SQ. TOP RAIL
2. 3/4" TUBULAR STEEL PICKETS AT 3⅞" O.C., TYP.
3. 2" SQ. POST, W/CAP, TYP.
4. 1–1/2" SQ. MIDDLE RAIL
5. 1–1/2" SQ. BOTTOM RAIL
6. FINISH GRADE
7. CONCRETE FOOTING AT ALL POSTS. 3000 PSI CONCRETE MIN. FOOTING DIMENSIONS FOR REFERENCE ONLY. INSTALL PER MANUFACTURER'S RECOMMENDATIONS.
8. UNDISTURBED EARTH
9. 12" WIDE CONCRETE BAND. REFER TO DETAIL 3/L6.0.

NOTES:
A. ALL FENCE PARTS TO BE TUBULAR STEEL.
B. GRIND SMOOTH ALL WELDS.
C. PRIME AND APPLY 2 COATS OF BLACK PAINT.
D. ALL PAINT AND PRIMER SHALL BE APPLIED TO CLEAN SURFACES IN 5 MIL. COATS.
E. FIELD VERIFY ALL DIMENSIONS PRIOR TO CONSTRUCTION.
F. CONTRACTOR TO SUBMIT SHOP DRAWING WITH POST SPACING SHOWN IN ELEVATION.

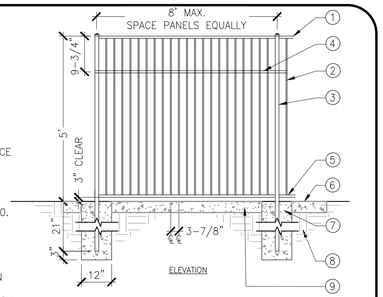

1 5' TUBULAR STEEL FENCE

NOT TO SCALE

1. FORKLATCH CANE BOLT
2. 1–1/2" SQ. GATE FRAME
3. 3/4" TUBULAR STEEL PICKETS AT 3⅞" O.C., TYP.
4. 2½" SQ. POST
5. 1–1/2" SQ. MIDDLE RAIL
6. HEAVY DUTY GATE HINGE
7. FINISH GRADE (SOIL)
8. CONCRETE FOOTING AT GATE POSTS. 3,500 PSI CONCRETE MIN. FOOTING DIMENSIONS FOR REFERENCE ONLY. INSTALL PER MANUFACTURER'S RECOMMENDATIONS.

NOTES:
1. ALL GATE PARTS TO BE TUBULAR STEEL.
2. GRIND SMOOTH ALL WELDS.
3. PRIME AND APPLY 2 COATS OF BLACK PAINT.
4. ALL PAINT AND PRIMER SHALL BE APPLIED TO CLEAN SURFACES IN 5 MIL. COATS.
5. FIELD VERIFY ALL DIMENSIONS PRIOR TO CONSTRUCTION.
6. CONTRACTOR TO PROVIDE PRODUCT DATA AND SHOP DRAWINGS.

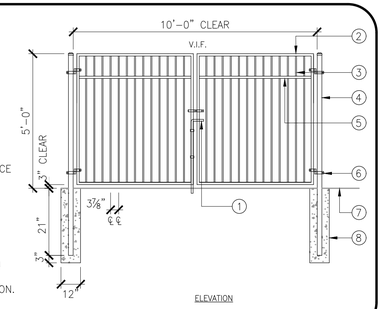

2 DOUBLE SWING GATE – 5' TUBULAR STEEL

NOT TO SCALE

1. 4" SQ GATE POST, W/CAP, TYP
2. 5/8" TUBULAR STEEL PICKETS AT 3 7/8" O.C., TYP
3. 2" SQ GATE FRAME, TYP
4. 1" SQ MID RAIL
5. EXPANDED METAL MESH. 24" WIDE FROM POST MIN.
6. 5' HIGH TUBULAR STEEL FENCE, SEE DETAIL 1
7. EXTERIOR PANIC BAR ON INSIDE OF GATE, WITH KEYED LOCKING HAND LEVER ON OUTSIDE
8. HEAVY DUTY SELF CLOSING HINGES
9. FINISH GRADE
10. CONCRETE FOOTING AT ALL POSTS. 3000 PSI CONCRETE MIN FOOTING DIMENSIONS FOR REFERENCE ONLY. INSTALL PER MANUFACTURER'S RECOMMENDATIONS.
11. PROCESS AND PREPARE SUBGRADE PER GEOTECHNICAL RECOMMENDATIONS.
12. GRID OPENINGS ATTACHED WITH WELDED CONNECTION TO TOP RAIL, BOTTOM, AND POST / PICKETS AS NEEDED. PAINT TO MATCH FENCE
13. 10" HIGH STEEL KICK PLATE ON BOTH SIDES OF GATE. WELD AND GRIND SMOOTH

NOTES:
1. ALL GATE PARTS TO BE TUBULAR STEEL.
2. GRIND SMOOTH ALL WELDS.
3. PRIME AND APPLY 2 COATS OF BLACK PAINT.
4. ALL PAINT AND PRIMER SHALL BE APPLIED TO CLEAN SURFACES IN 5 MIL. COATS.
5. SEE PLAN FOR POSITION OF GATE HINGES.
6. CONTRACTOR TO PROVIDE FENCE AND GATE SHOP DRAWINGS AS A SUBMITTAL TO LANDSCAPE ARCHITECT PRIOR TO ORDERING MATERIALS.
7. CONTRACTOR TO SUBMIT SAMPLES, SHOP DRAWINGS, AND MANUFACTURERS DATA TO LANDSCAPE ARCHITECT BEFORE ORDERING.
8. FIELD VERIFY ALL DIMENSIONS PRIOR TO CONSTRUCTION.

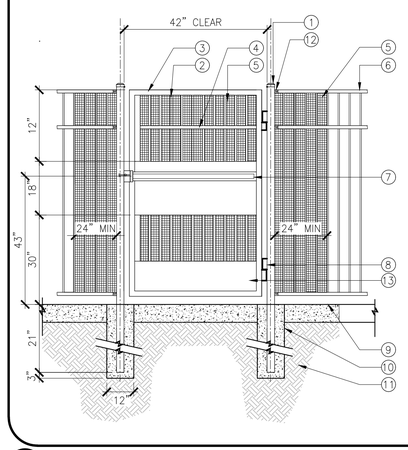

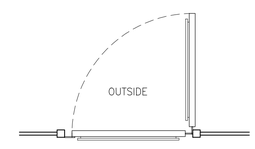

GATE SWING DIRECTION

3 GATE PEDESTRIAN – 5' TUBLAR STEEL

NOT TO SCALE

811 Know what's below. Call before you dig.

Westwood
Westwood Professional Services, Inc.
6200 STONERIDGE MALL ROAD, SUITE 330
PLEASANTON, CA 94588
T: 925.223.8340

NO.	DESCRIPTION	DATE	BY	APP. DATE	APP.

ANTELOPE, CALIFORNIA

NHRPD SIERRA CREEK PARK

7781 WATT AVE CONSTRUCTION DETAILS

DATE: 08/31/26
DRAFTER: TH, AL, CY
DESIGNER: KF, TH
CHECKED: KF, JG
PROJECT NO. 41541

LICENSED LANDSCAPE ARCHITECT — KAREN N. FOLSOM #4793 — Signature 03/31/27 Renewal Date — 08/31/26 Date — STATE OF CALIFORNIA

L6.2

Last Saved by: MALoureiro
Plot Date/Time: 8/26/2026 10:10 AM
Drawing: N:_ODE\Pleasanton\41541 NHRPD Sierra Creek Park\Landscape\Const\Plans\41541-DT

1. OUTDOOR CREATIONS ADA PICNIC TABLE, PER SITE FURNISHING LEGEND
2. ADA WHEELCHAIR SPACE
3. COMPACTED SUBGRADE
4. CONCRETE FLATWORK
5. INTEGRALLY CAST ANTI-SKATE DETERRENTS

NOTES:
A. FINISH: SMOOTH; COLOR PER SITE FEATURE SCHEDULE. SEALER: STANDARD ACRYLIC.
B. INSTALL PER MANUFACTURER'S RECOMMENDATIONS.

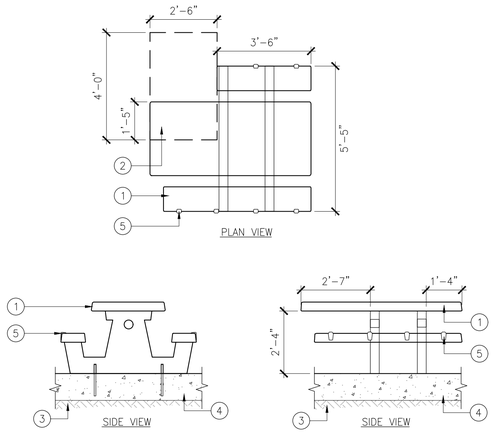

6 PICNIC TABLE –ADA MODEL

3/8"=1'-0"

1. BEARSAVER RECEPTACLE–TRASH OR RECYCLING
2. 30" MIN X 30" MIN CONCRETE PAD – REFER TO DETAIL 1, SHEET L6.0
3. ¾" J BOLT SUNK IN CONCRETE PROTRUDES 1.25"
4. AGGREGATE BASE
5. COMPACTED SUBGRADE PER GEOTECH REPORT
6. HANDS–FREE FOOT PEDAL
7. BACK OF TRASH SHALL BE LOCATED 6" OFF OF PAVEMENT EDGE.

NOTES:
A. INSTALL PER MANUFACTURER'S RECOMMENDATIONS
B. ONE TRASH AND ONE RECYCLING BIN PER SITE FEATURES PLAN

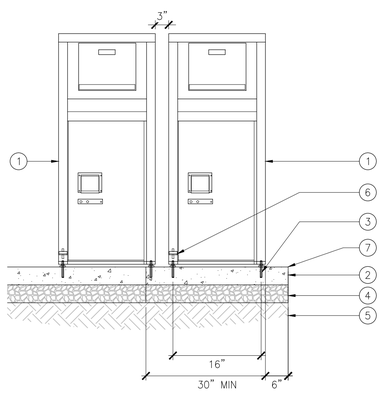

7 TRASH CAN AND RECYCLING BIN

NOT TO SCALE

1. 2.375" O.D. STRUCTURAL GRADE FRAME
2. TENSION BAR
3. TENSION CLIP
4. DOME CAP – SIZE TO POST
5. MASTER HALCO ROUND POST HINGE – SIZE TO POST (OR EQUAL)
6. 2.875" O.D. STRUCTURAL GRADE CORNER/END/PULL POSTS
7. CONTINUOUS CONCRETE CURB OR CONCRETE FLATWORK. SEE SITE FEATURES PLAN, SHEETS L3.0–3.5. SEE DETAILS 1–6, SHEET L7.1.
8. CONCRETE FOOTING PER STRUCTURAL ENGINEER (DEFERRED SUBMITTAL)
9. COMPACTED SUBGRADE
10. MASTER–HALCO DOUBLE GATE LATCH (OR EQUAL)
11. 2"X2" 9 GA. HOT DIPPED GALVANIZED CHAIN LINK FABRIC MESH (BLACK VINYL COATED). KNUCKLED TOP AND BOTTOM. INSTALL ON FIELD SIDE OF POSTS.

NOTES:
1. INSTALL PER MANUFACTURER'S RECOMMENDATIONS.
2. GATE TO TIE INTO AND MATCH EXISTING FENCING ON SITE. ANY DISCREPANCIES BETWEEN THESE DETAILS AND ACTUAL FENCING TO BE BROUGHT TO THE ATTENTION OF THE LANDSCAPE ARCHITECT BEFORE COMMENCING WORK.
3. ALL POSTS, RAILS, AND HARDWARE TO BE HOT DIPPED GALVANIZED MATERIAL.
4. DAMAGE TO EXISTING FENCING DURING CONSTRUCTION SHALL BE REPAIRED OR REPLACED BY CONTRACTOR.
5. MINIMUM FOOTING SIZE SHOWN.
6. ALL FENCING AND GATES AROUND SOFTBALL FIELD TO BE BLACK VINYL COATED
7. PROVIDE 24" CLEAR ON LATCH SIDE OF GATE

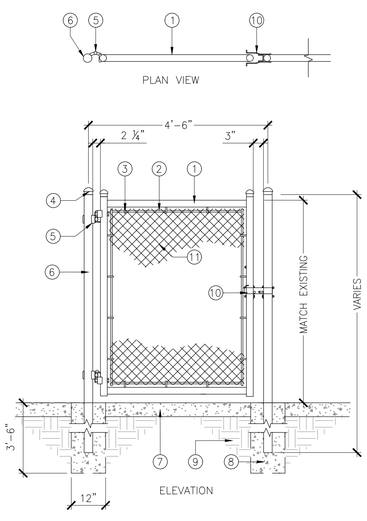

8 CHAIN LINK 4' WIDE SERVICE GATE

NOT TO SCALE

1. ROUND PICNIC TABLE, PER SITE FURNISHING LEGEND
2. PROCESS AND PREPARE SUBGRADE PER GEOTECH RECOMMENDATIONS
3. CONCRETE FLATWORK. SEE DETAIL 1, SHEET L6.0
4. THREADED COIL INSERT AND ROD PROVIDED WITH TABLE FOR MECHANICAL ATTACHMENT INTO 3" DIA. GROUT PACKET ON SIDE BY OTHERS

NOTES:
A. FINISH: SMOOTH; COLOR PER SITE FEATURE SCHEDULE. SEALER: STANDARD ACRYLIC.
B. INSTALL PER MANUFACTURER'S RECOMMENDATIONS.
C. TABLE MUST BE MECHANICALLY ATTACHED.

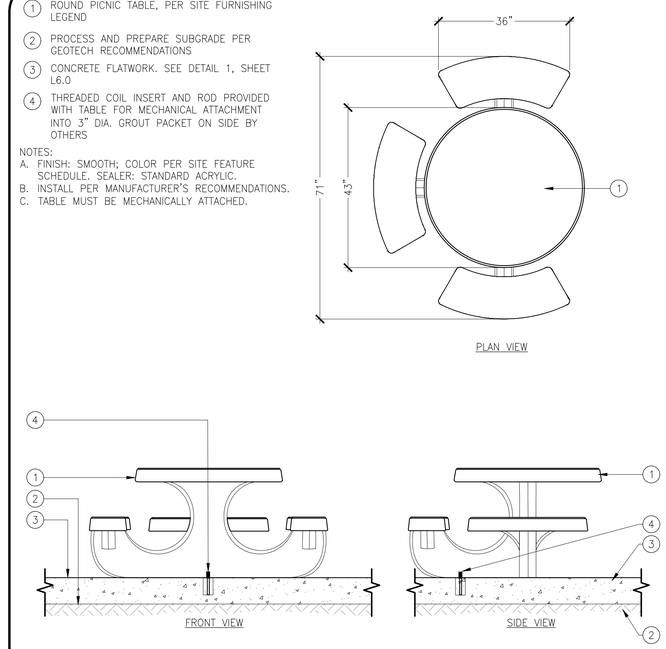

4 ROUND PICNIC TABLE

NOT TO SCALE

1. OUTDOOR CREATIONS PICNIC TABLE, PER SITE FURNISHING LEGEND
2. COMPACTED SUBGRADE
3. CONCRETE FLATWORK.
4. INTEGRALLY CAST ANTI–SKATE DETERRENTS

NOTE:
A. FINISH: SMOOTH; COLOR PER SITE FEATURE SCHEDULE. SEALER: STANDARD ACRYLIC.
B. INSTALL PER MANUFACTURER'S RECOMMENDATIONS.

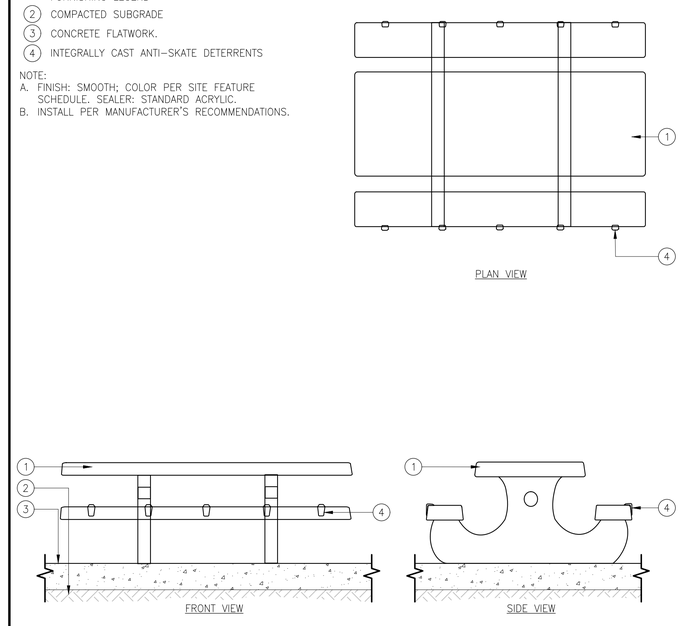

5 PICNIC TABLE –STANDARD

NOT TO SCALE

1. BACKED BENCH TYPE PER SITE FEATURE SCHEDULE
2. PROCESS AND PREPARE SUBGRADE PER GEOTECHNICAL RECOMMENDATIONS
3. CONCRETE FLATWORK SEE DETAIL 1, SHEET L6.0
4. TREADED INSERTS IN LEGS FOR MOUNTNG DOWELS
5. BACK OF BENCH TO BE LOCATED 6" OFF OF PAVEMENT EDGE.

NOTE:
A. INSTALL PER MANUFACTURER'S RECOMMENDATIONS.

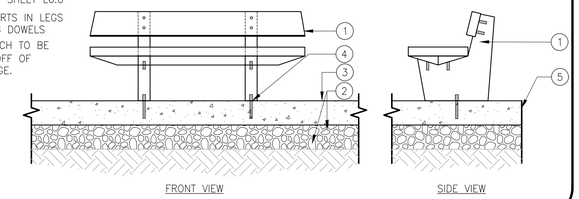

1 BACKED BENCH AT CONCRETE PAVING

NOT TO SCALE

1. BACKLESS BENCH TYPE PER SITE FEATURE SCHEDULE
2. PREPARE AND PROCESS SUBGRADE PER GEOTECHNICAL RECOMMENDATIONS
3. CONCRETE FLATWORK SEE DETAIL 1, SHEET L6.0
4. THREADED INSERTS IN LEGS FOR MOUNTING DOWELS
5. BACK OF BENCH TO BE LOCATED 6" OFF OF PAVEMENT EDGE

NOTE:
A. INSTALL PER MANUFACTURER'S RECOMMENDATIONS.

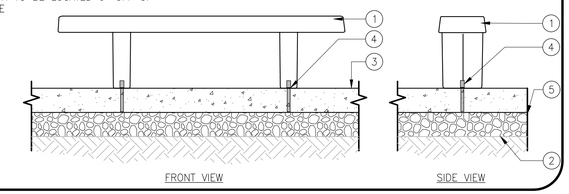

2 BACKLESS BENCH

NOT TO SCALE

1. GRILL TYPE PER SITE FURNISHING LEGEND
2. CONCRETE FLATWORK PER DETAIL 1/L6.0
3. FINISHED GRADE
4. CONCRETE FOOTING
5. NATIVE SOIL
6. COMPACTED BASE ROCK

NOTE:
B. DETAIL FOR INFORMATIONAL PURPOSES ONLY, INSTALL PER MANUFACTURER'S RECOMMENDATIONS.

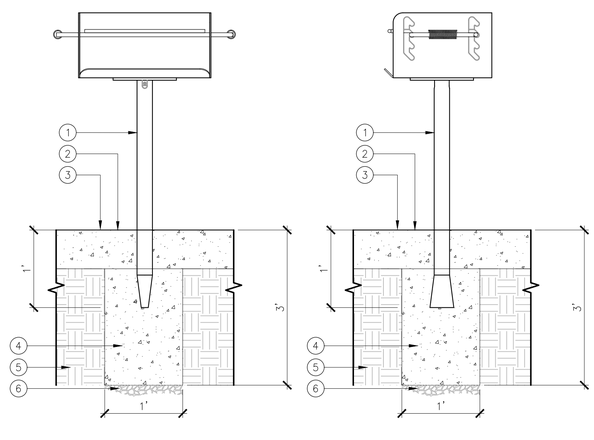

3 BBQ GRILL

NOT TO SCALE

Know what's below. Call before you dig.

Westwood
Westwood Professional Services, Inc.
6200 STONERIDGE MALL ROAD, SUITE 330
PLEASANTON, CA 94588
T: 925.223.8340
westwoodps.com

NO.	DESCRIPTION	DATE	BY	APP. DATE	APP.

ANTELOPE, CALIFORNIA

NHRPD SIERRA CREEK PARK

7781 WATT AVE
CONSTRUCTION DETAILS

DATE: 08/31/26
DRAFTER: TH, AL, CY
DESIGNER: KF, TH
CHECKED: KF, JG
PROJECT NO. 41541

LICENSED LANDSCAPE ARCHITECT
KARIN N. FOLSOM
Signature
03/31/27
Renewal Date
08/31/26
Date
STATE OF CALIFORNIA

L6.3

Last Saved by: MALourenco
Plot Scale: 1:1 Plot Date: 8/31/2026 9:16 AM
Drawing: N:_CADE\Pleasanton\41541 NRHPD Sierra Creek Park\Landscape\ConstPlans\41541-DT

1. 42"x24" ALUMINUM SIGN WITH WEATHER, FADE, AND ABRASION RESISTANT UV INK ON A WHITE BACKGROUND
2. 1 1/2" RADIUS AT CORNERS, TYP.
3. PROPOSITION 68 LOGO MIN. OF 24" TALL
4. PARK NAME WHERE NOTED
5. PROJECT FUNDING ACKNOWLEDGEMENT WHERE NOTED
6. CURRENT OFFICIAL NAMES WHERE NOTED.
7. 2"x2"x3/16" GALVANIZED SQUARE STEEL TUBE
8. CONCRETE FOOTING, AS DIMENSIONED
9. 1/2" RADIUS, TYP.
10. PLANTING AREA

NOTES:
1. PRIOR TO PREPARATION OF SHOP DRAWINGS AND FABRICATION, SIGNAGE CONTENT TO BE CONFIRMED BY CONTRACTOR WITH DISTRICT.
2. CONTRACTOR TO SUBSEQUENTLY PROVIDE DETAILED SHOP DRAWINGS FOR DISTRICT APPROVAL.
3. CONTRACTOR TO PROVIDE STRUCTURAL ENGINEERING FOR FOOTING AND COORDINATE PERMITTING.

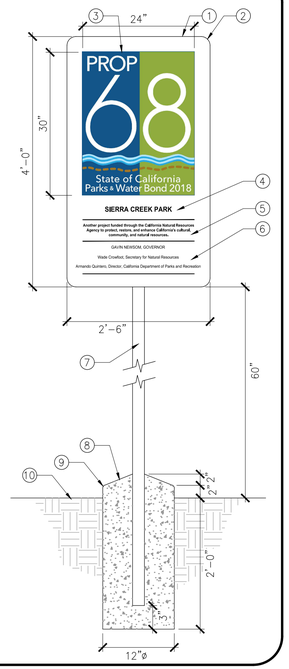

7 PROPOSITION 68 SIGN

NOT TO SCALE

1. ALUMINUM PET WASTE SIGN.
2. LOCK LOCATION. PROVIDE SEPARATE PADLOCK WITH KEY.
3. BIODEGRADABLE BAGS DISPENSER.
4. PET WASTE STATION RECEPTACLE
5. 2" DIAMETER GALV STEEL SIGN POST.
6. CROWN TO DRAIN
7. FINISH GRADE
8. CONCRETE FOOTING PER MANUFACTURER'S RECOMMENDATIONS
9. EXISTING SUBGRADE
10. CLASS II AGGREGATE, COMPACTED TO 95% RELATIVE COMPACTION

NOTES:
A. MODEL AND LOCATION PER SITE FEATURES AND FINISHES PLAN.
B. DETAIL FOR REFERENCE ONLY INSTALL PER MANUFACTURERS RECOMMENDATIONS.
C. CONTRACTOR SHALL VERIFY ALL PRODUCT DETAILS WITH DISTRICT PRIOR TO ORDERING.

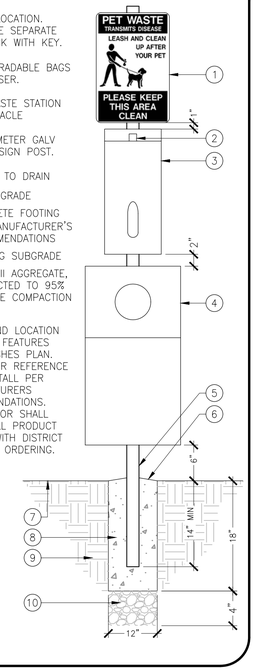

5 PET STATION

NOT TO SCALE

1. CONCRETE PAD FOR BIKE PARKING REFER TO DETAIL 1 SHEET L6.0
2. ADJACENT PATHWAY. CONCRETE FLATWORK. SEE SITE FEATURES AND FINISHES PLAN FOR MATERIAL AND LOCATION.
3. EXPANSION JOINT WHERE ADJACENT TO CONCRETE FLATWORK
4. BIKE LOCKER. SEE SITE FEATURE SCHEDULE SHEET L2.0 FOR MANUFACTURER AND MODEL. SURFACE MOUNT PER MANUFACTURER'S RECOMMENDATION.
5. BIKE RACK. SEE SITE FEATURE SCHEDULE SHEET L2.0 FOR MANUFACTURER AND MODEL. SURFACE MOUNT PER MANUFACTURER'S RECOMMENDATION.
6. PLANTING AREA

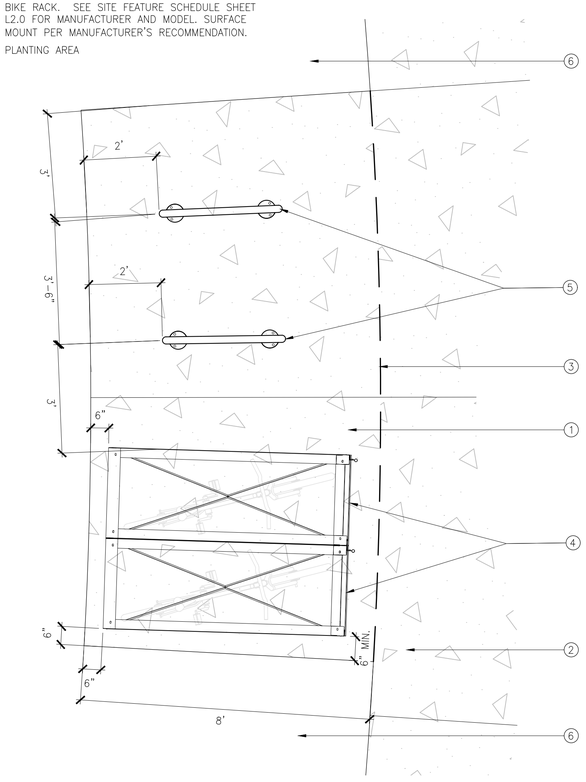

3 BIKE PARKING – BIKE RACKS & BIKE LOCKERS

NOT TO SCALE

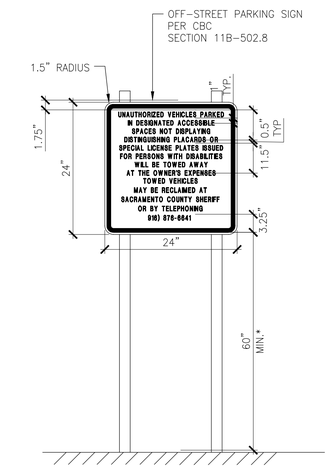

NOTES:
A. HEIGHT TO BE MEASURED TO THE EDGE OF THE LOWEST SIGN ON THE POLE.
B. SIGN TO BE PLACED AT PARKING LOT ENTRY IN PLANTING AREA.

1 PARKING LOT ENTRY SIGN

NOT TO SCALE

APPROVED BY_____
DATE_____
PROJECT_____
QUANTITY_____

INDICATE POWDER COAT COLOR:
___BLACK TEX
___NPS BROWN
___NPS DARK BROWN
___NPS MED GREY
___OTHER
___SPECIFY OTHER FINISH_____

ITEM	PART NUMBER	DESCRIPTION	MATERIAL	QTY
1	TRP101-36-45	TRADITIONAL POST FOR 36" X 1/2" PANEL	ALUMINUM	1
2	TRP101-36-45	TRADITIONAL POST FOR 36" X 1/2" PANEL	ALUMINUM	1
3	FA-3648R	36 X 48 PANEL FRAME	ALUMINUM	1

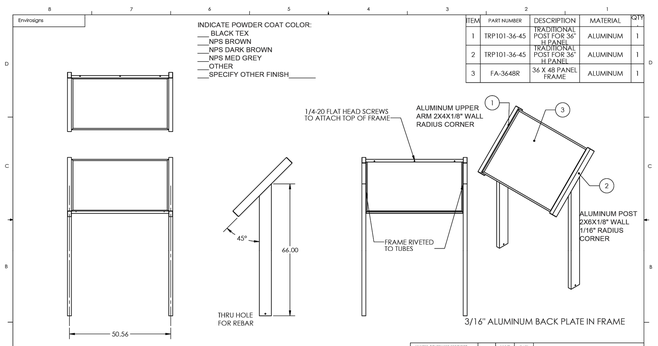

POWDERCOAT PER PO SPEC

RECOMMENDED INSTALLATION HEIGHT IS 28-32" FROM GRADE
30" FROM GRADE IS APPROX. 20" BURIAL

UNLESS OTHERWISE SPECIFIED:	NAME	DATE	
DIMENSIONS ARE IN INCHES	DRAWN	CDH	4/10/2013
TOLERANCES:	APPROVED	JOHN DOE	4/16/2013
FRACTIONAL ± 1/32	MATERIAL		TITLE:
ANGULAR: MACH ± 0°30'REF ± 0°	ALUMINUM		ALUM FRAME FOR 36 X 60 PANEL
TWO PLACE DECIMAL ±.030			
THREE PLACE DECIMAL ±.010			
PROJECTION	DWG. NO.		REV / SIZE
	EB-T3648-45		B
DO NOT SCALE DRAWING	SCALE: 1:30	WEIGHT:	SHEET 1 OF 1

PROPRIETARY AND CONFIDENTIAL
THE INFORMATION CONTAINED IN THE DRAWING IS THE SOLE PROPERTY OF EB. ANY REPRODUCTION IN PART OR AS A WHOLE WITHOUT THE WRITTEN PERMISSION OF EB IS PROHIBITED.

CONTROL DATE: 3/18/2015 4:44 PM

NOTES:
1. CONTRACTOR TO PROVIDE SHOP DRAWINGS PREPARED BY SIGN MANUFACTURER.
2. FOR REVIEW: LANDSCAPE ARCHITECT WILL PROVIDE SIGNAGE GRAPHIC UPON REQUEST.
3. SHOP DRAWINGS TO INCLUDE INSTALLATION DETAIL.

8 INTERPRETIVE SIGNAGE

NOT TO SCALE

1. WELDED STEEL CAP
2. BOLLARD – SEE SITE FURNISHINGS SCHEDULE FOR TYPE.
3. BOLLARD SLEEVE PER MANUFACTURER
4. PADLOCK – PROVIDED BY CLIENT
5. CONCRETE FLATWORK – SEE DETAIL 1/L6.0

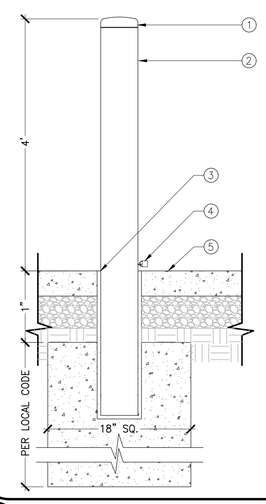

6 BOLLARD – REMOVABLE

NOT TO SCALE

1. ACCESSIBILITY PARKING STALL SIGN DETAIL 2/L6.4
2. TRAFFIC LINE BLUE 4" WIDE STRIPPING
3. 36" SQUARE PAVEMENT SYMBOL. WHITE ON BLUE BACKGROUND HANDICAP SYMBOL PER CBC SEC. 11B-502.6
4. THE WORDS "NO PARKING" SHALL BE PAINTED ON THE SURFACE WITHIN EACH ACCESS AISLE. THIS NOTICE SHALL BE PAINTED IN WHITE LETTERS NOT LESS THAN 12 INCHES HIGH AND LOCATED SO THAT IT IS VISIBLE TO TRAFFIC ENFORCEMENT OFFICIALS. (CBC 11B-502.3.3)
5. WHEELSTOP

NOTES:
A. 2% MAX. SLOPE IN ANY DIRECTION @ PARKING SPACE AND ACCESS AISLE.
B. REFER TO CIVIL GRADING PLAN FOR MORE INFORMATION

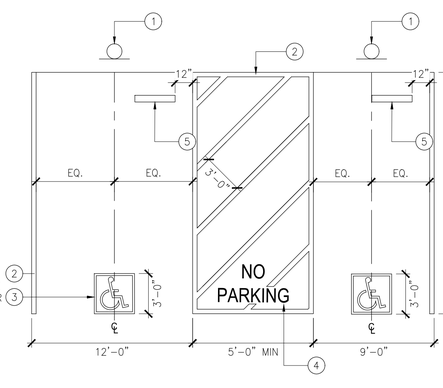

4 ACCESSIBLE PARKING STALL

3/16"=1'-0"

1. RECTANGULAR RIGID ALUMINUM SIGN. ACCESSIBLE PARKING SIGNAGE-R99C (CA)
2. VAN ACCESSIBLE SIGN
3. 2" DIAMETER GALV STEEL SIGN POST.
4. LOCK NUT (SIZE 2-1/2"X5/8")
5. CONCRETE FOOTING-CROWN TO DRAIN
6. LANDSCAPE AREA

NOTES:
A: PARKING SIGNAGE SHALL COMPLY WITH CBC SECTION 11B-502.6. INTERNATIONAL SYMBOL OF ACCESSIBILITY SHALL COMPLY WITH CBC 11B-703.7.2.1, WHITE LETTERING ON BLUE BACKGROUND.
B: SIGN SHALL BE 60" MINIMUM ABOVE FINISHED SURFACE. SIGN LOCATED WITH A CIRCULATION PATH SHALL BE A MINIMUM OF 80" ABOVE FINISH SURFACE.

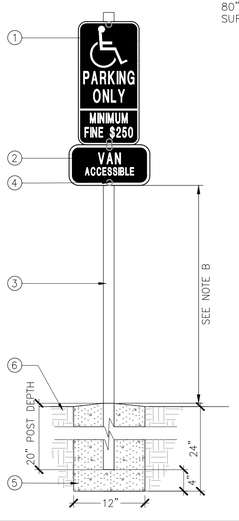

2 VAN ACCESSIBLE PARKING SIGN

NOT TO SCALE

Know what's below. Call before you dig.

Westwood
Westwood Professional Services, Inc.
6200 STONERIDGE MALL ROAD, SUITE 330
PLEASANTON, CA 94588
T: 925.223.8340

NO.	DESCRIPTION	DATE	BY	APP. DATE	APP.

ANTELOPE, CALIFORNIA

NHRPD SIERRA CREEK PARK

7781 WATT AVE CONSTRUCTION DETAILS

DATE: 08/31/26
DRAFTER: TH, AL, CY
DESIGNER: KF, TH
CHECKED: KF, JG
PROJECT NO. 41541

LICENSED LANDSCAPE ARCHITECT
SHERI N. FOLSOM
Signature
03/31/27
Renewal Date
08/31/26
Date
STATE OF CALIFORNIA

L6.4

Last Saved by: MALucero
Plot Scale: 1:1 WYSIWYG
Plot Date: 8/31/2026 9:16 AM
Drawing: N:_CDE\Pleasanton\41541 NRHPD Sierra Creek Park\Landscape\ConstPlans\41541-DT

NOTE:
1. PREFAB BUILDING TO BE PROVIDED BY DISTRICT. CONTRACTOR TO COORDINATE SCHEDULE FOR DELIVERY WITH PUBLIC RESTROOM BUILDING. CONTACT: MIKE MEGLEN, 2587 BUSINESS PARKWAY | MINDEN, NV 89423. P: 888-888-2060 EXT 149
2. CONTRACTOR SHALL PROCESS AND PREPARE SUBGRADE, AND GRADE, IN ACCORDANCE TO GEOTECH RECOMMENDATIONS AND PRE-FAB RESTROOM MANUFACTURER'S SPECIFICATIONS FOR RESTROOM BUILDING INSTALLATION BY MANUFACTURER.
3. PAVEMENTS OUTSIDE OF EXTERIOR WALLS OF RESTROOM BUILDING SHALL BE PROVIDED PER SITE FEATURES AND FINISHES PLAN ON SHEET L2.0–L2.1.
4. CONTRACTOR SHALL PROVIDE ALL UTILITIES PER SITE UTILITY PLANS AND EXTEND ALL UTILITY LINES TO WITHIN 5' OF RESTROOM BUILDING. CONTRACTOR SHALL MAKE FINAL UTILITY CONNECTIONS INCLUDING NECESSARY UTILITY BOXES.
5. CONTRACTOR SHALL COORDINATE SEWER INVERT ELEVATION WITH MANUFACTURER PRIOR TO BUILDING INSTALLATION. CONTRACTOR SHALL VERIFY AND COORDINATE LOCATION OF UTILITIES INCLUDING WATER METER SIZE, TYPE, AND LOCATION.
6. CONTRACTOR SHALL SUPPLY AND STOCKPILE REQUIRED QUANTITY OF COARSE MASON SAND WITHIN BUILDING PROXIMITY FOR USE BY MANUFACTURER FOR UTILITY TRENCH BACKFILL.

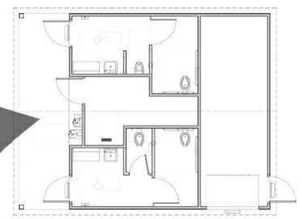

FLOOR PLAN
SCALE: NOT TO SCALE

THIS CONCEPTUAL/ PRELIMINARY DESIGN AND THE 3D RENDERING IS AN ARTISTIC INTERPRETATION OF THE DESIGN. IT IS NOT MEANT TO BE AN EXACT RENDITION OF THE FINISH PRODUCT. SOME ITEMS MAY NOT BE STANDARD AND/OR SUBJECT TO CHANGE DURING PROJECT DEVELOPMENT

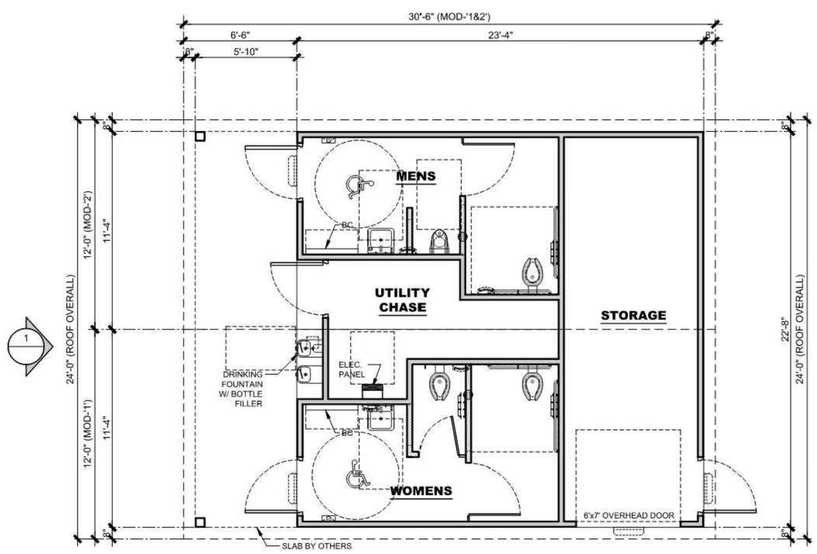

2 **FLOOR PLAN**
SCALE:3/16"=1'-0"

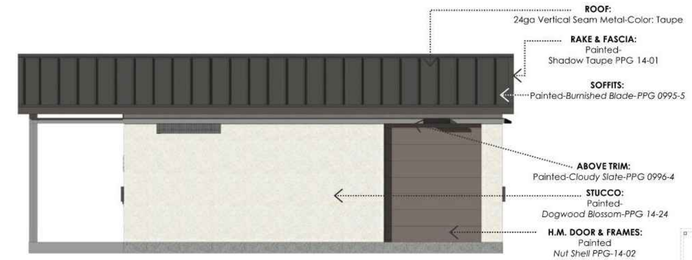

NOTES:
PITTSBURG PAINT BRAND: for all Painted Materials.
METAL SALES BRAND: for Roof Materials.

ELEVATION 2

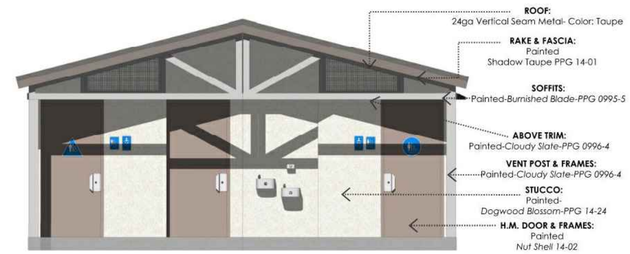

ELEVATION 1

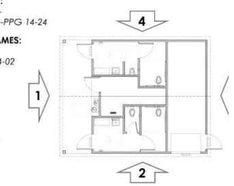

KEY PLAN
SCALE: NOT TO SCALE

THIS CONCEPTUAL/ PRELIMINARY DESIGN AND THE 3D RENDERING IS AN ARTISTIC INTERPRETATION OF THE DESIGN. IT IS NOT MEANT TO BE AN EXACT RENDITION OF THE FINISH PRODUCT. SOME ITEMS MAY NOT BE STANDARD AND/OR SUBJECT TO CHANGE DURING PROJECT DEVELOPMENT

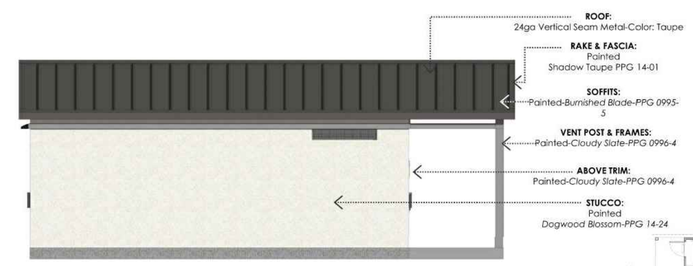

NOTES:
PITTSBURG PAINT BRAND: for all Painted Materials.
METAL SALES BRAND: for Roof Materials.

ELEVATION 4

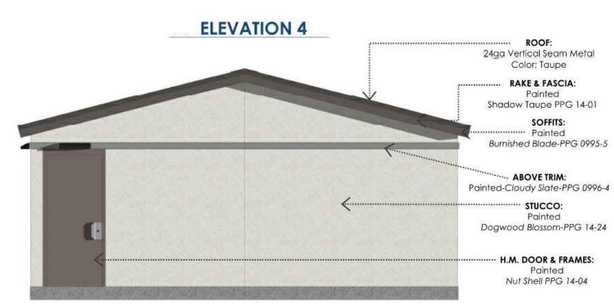

ELEVATION 3

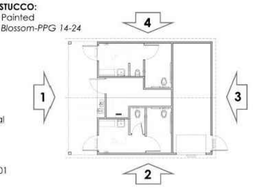

KEY PLAN
SCALE: NOT TO SCALE

THIS CONCEPTUAL/ PRELIMINARY DESIGN AND THE 3D RENDERING IS AN ARTISTIC INTERPRETATION OF THE DESIGN. IT IS NOT MEANT TO BE AN EXACT RENDITION OF THE FINISH PRODUCT. SOME ITEMS MAY NOT BE STANDARD AND/OR SUBJECT TO CHANGE DURING PROJECT DEVELOPMENT

1 RESTROOM BUILDING

NOT TO SCALE

811 Know what's below. Call before you dig.

Westwood
Westwood Professional Services, Inc.
6200 STONERIDGE MALL ROAD, SUITE 330
PLEASANTON, CA 94588
T: 925.223.8240
www.westwoodps.com

NO.	DESCRIPTION	DATE	BY	APP. DATE	APP.

ANTELOPE, CALIFORNIA

NHRPD SIERRA CREEK PARK
7781 WATT AVE
CONSTRUCTION DETAILS

DATE: 08/31/26
DRAFTER: TH, AL, CY
DESIGNER: KF, TH
CHECKED: KF, JG
PROJECT NO. 41541

LICENSED LANDSCAPE ARCHITECT
KAREN N. FOLSOM
Signature
03/31/27
Renewal Date
08/31/26
Date
STATE OF CALIFORNIA

L6.5

Last Saved by: MALucarrico
Plot Date/Time: 8/31/2026 9:16 AM
Drawing: N:_ODE\Pleasanton\41541 NRHPD Sierra Creek Park\Landscape\Const\Plans\41541-01T

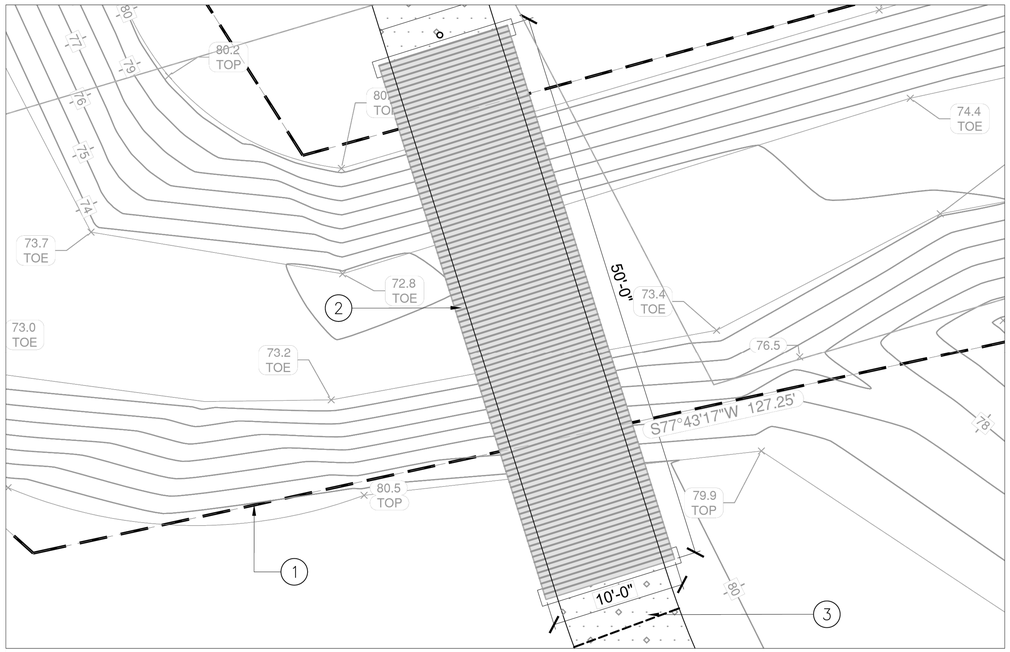

1 TOP OF CREEK BANK

2 BRIDGE

3 PATHWAY

2 BRIDGE PLAN VIEW

NOT TO SCALE

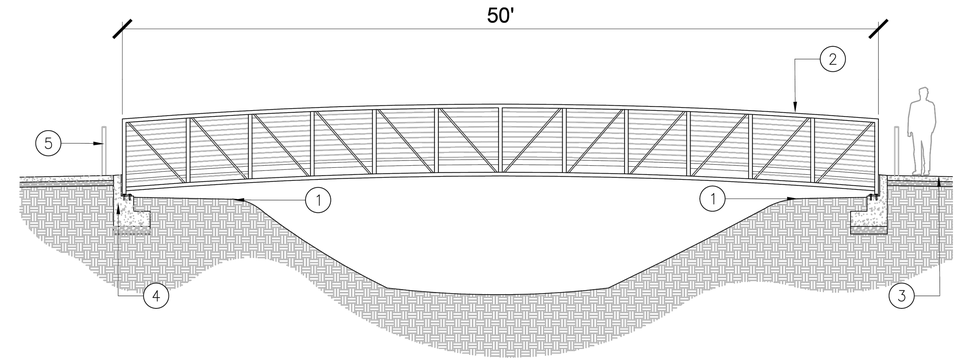

1 TOP OF CREEK BANK

2 ARCHED BRIDGE

3 PATHWAY

4 BRIDGE SUPPORT

5 BOLLARD

1 BRIDGE SECTION

NOT TO SCALE

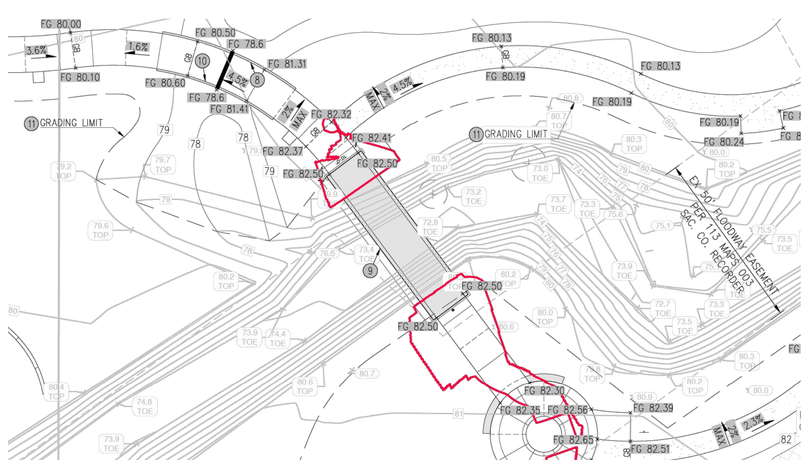

3 BRIDGE GRADING

NOT TO SCALE

Know what's **below.**
Call before you dig.

Westwood

Westwood Professional Services, Inc.
6200 STONERIDGE MALL ROAD, SUITE 330
PLEASANTON, CA 94588
T: 925.223.8340
westwoodps.com

NO.	DESCRIPTION	DATE	BY	APP. DATE	APP.

ANTELOPE, CALIFORNIA

NHRPD SIERRA CREEK PARK

7781 WATT AVE, ANTELOPE

BRIDGE DETAILS

DATE: 08/31/26
DRAFTER: TH, AL, CY
DESIGNER: KF, TH
CHECKED: KF, JG

PROJECT NO.
41541

LICENSED LANDSCAPE ARCHITECT
KAREN N. FOLSOM
Signature
03/31/27
Renewal Date
08/31/26
Date
STATE OF CALIFORNIA

L6.6

Last Saved by: MAcuncion
Plot Date/Time: 8/31/2026 9:50 AM
Drawing: N:_CDE\Pleasanton\41541 NRHPD Sierra Creek Park\Landscape\ConstPlans\41541-DT

MATCHLINE "A" - SEE SHEET C3.2

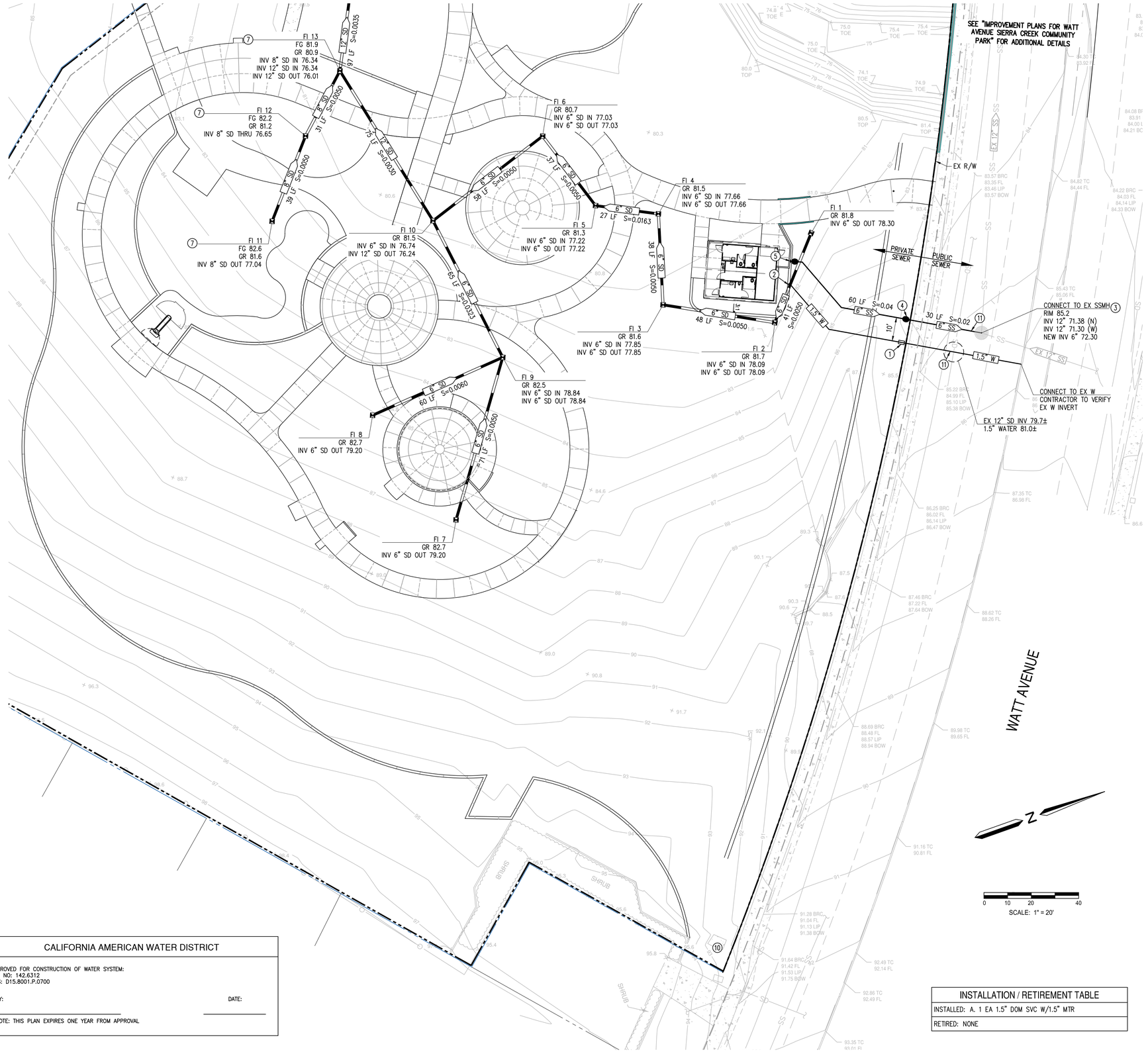

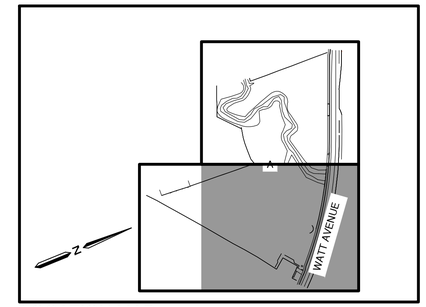

LOCATION MAP

STORM DRAIN STRUCTURE SCHEDULE		
STRUCTURE	TYPE	DESCRIPTION
CB 1	SACRAMENTO COUNTY 9-13B	DROP INLET TYPE B
FI 10-15	CHRISTY V24	V24 DRAIN BOX 20-3/4" X 19-1/4"
FI 1-8	NDS 9" CATCH BASIN	NDS 9"X9" CATCH BASIN (PART NO. 932) W/ NDS GRATE (PART NO. 980) OR APPROVED EQUAL
FI 9	NDS 9" CATCH BASIN	NDS 9"X9" CATCH BASIN (PART NO. 932) W/ NDS ATRIUM GRATE (PART NO. 981) OR APPROVED EQUAL

LEGEND:

1. 1.5" WATER METER & 1.5" WATER SERVICE PER CAW STANDARD DETAILS CAW-ND-W202 & CAW-ND-W204. SEE SHEET C6.3. INSTALL REDUCED PRESSURE BACKFLOW PER UBC LIST OF APPROVED DEVICES.
2. 1.5" WATER SERVICE, INV 3' BELOW FF, SEE PLANS BY OTHERS FOR CONTINUATION
3. ADJUST EX SSMH TO GRADE AS NEEDED PER SACRAMENTO AREA SEWER DISTRICT DETAIL MH-03, SEE NOTE #6 FOR MORE DETAIL
4. CONSTRUCT 30 LF 6" PVC SEWER LOWER LATERAL PER SACRAMENTO AREA SEWER DISTRICT DETAIL LL-01A @2% SLOPE WITH WYE CONNECTION & W/ CLEANOUT PER DETAIL LL-02 AT RIGHT-OF-WAY.
5. PRIVATE SEWER, INV 5' BELOW FF, SEE PLANS BY OTHERS FOR CONTINUATION
6. UNDER SIDEWALK DRAIN PER DETAIL A SHEET C6.1
7. CONNECT TO RUBBER SURFACING DRAINAGE SYSTEM. DRAIN INLET GRATE ELEVATION TO BE SET UNDER RUBBER SURFACING
8. BUBBLE UP FIELD INLET, SEE DETAIL E SHEET C6.1
9. STORM DRAIN CULVERT PER LANDSCAPE PLANS "SIERRA CREEK COMMUNITY PARK – 7781 WATT AVE" DETAIL 5 SHEET L6.1
10. IRRIGATION POC, CONNECT TO EXISTING 2-2" WATER METER AND 3" BACKFLOW PREVENTION DEVICE. SEE LANDSCAPE PLANS "SIERRA CREEK COMMUNITY PARK – 7781 WATT AVE" SHEET L4.1 FOR IRRIGATION DETAILS
11. TRENCHING AND PAVEMENT RESTORATION PER COUNTY OF SACRAMENTO STD 4-64 SEE SHEET C6.2, WATER TRENCH WIDTH PER SACRAMENTO COUNTY CONSTRUCTION SPECIFICATIONS SECTION 19 AND SEWER TRENCH WIDTH PER SASD SECTION 311

NOTES:

1. POTABLE WATER MAIN SHALL MAINTAIN A MINIMUM OF 4' COVER.
2. CONTRACTOR SHALL FIELD VERIFY EXISTING UTILITIES INVERT AND LOCATION PRIOR TO ESTABLISHING CONNECTIONS.
3. CONTRACTOR SHALL MAINTAIN MIN VERTICAL CLEARANCE BETWEEN WATER SERVICE LATERALS AND OTHER UTILITIES.
4. TREE COORDINATION NOTE: WATER LINES, DRAIN LINES, SEWER LINES AND OTHER UTILITIES SHOWN ON THESE PLANS HAVE BEEN COORDINATED WITH REQUIRED TREE LOCATIONS. ELECTRICAL CONDUITS OR OTHER UTILTIES NOT SHOWN ON THESE PLANS SHALL BE LOCATED SO AS TO NOT CONFLICT WITH REQUIRED TREE LOCATIONS. SEE APPROVED LANDSCAPE PLANS FOR LOCATIONS.
5. ALL ONSITE DRAINAGE IMPROVEMENTS SHALL BE CONSIDERED AS PRIVATE FACILITIES AND MAINTAINED BY THE PROPERTY OWNER.
6. SEWER TAP NOTE:
   SACRAMENTO AREA SEWER DISTRICT WILL PERFORM THE SEWER TAP AFTER PAYMENT OF FEES. EMAIL PERMITSERVICES@SACSEWER.COM WITH THE FOLLOWING INFORMATION TO PAY SEWER TAP FEES.
   - APPROVED IMPROVEMENT PLANS (WITH PRE-CONSTRUCTION APPROVAL SIGNATURE FOR LOWER LATERAL ONLY PLANS)
   - ORDER NUMBER
   - CONTRACTOR'S NAME AND PHONE NUMBER

   CONTRACTOR WILL PROVIDE ALL TRAFFIC CONTROL, PAVEMENT CUTTING, EXCAVATION, SHORING, PIPE LAYING, PIPE BEDDING, BACKFILL, AND RESTORATION IN ACCORDANCE WITH THESE PLANS AND THE LOCAL JURISDICTION. AN ACCESS PERMIT IS REQUIRED BEFORE CONNECTING TO THE SACRAMENTO AREA SEWER DISTRICT'S SYSTEM. PLEASE ALLOW 10 BUSINESS DAYS FOR PROCESSING OF THE ACCESS PERMIT.
7. NOT APPROVED FOR PRIVATE UNDERGROUND FIRE SERVICE INSTALLATION. A SEPARATE PLAN SUBMITTAL IS REQUIRED FROM THE INSTALLING CONTRACTOR. SEE SACRAMENTO METROPOLITAN FIRE DISTRICT NOTES.

CALIFORNIA AMERICAN WATER DISTRICT
APPROVED FOR CONSTRUCTION OF WATER SYSTEM: FILE NO: 142.6312 WBS: D15.8001.F.0700
BY: DATE:
NOTE: THIS PLAN EXPIRES ONE YEAR FROM APPROVAL

INSTALLATION / RETIREMENT TABLE
INSTALLED: A. 1 EA 1.5" DOM SVC W/1.5" MTR
RETIRED: NONE

Know what's below. Call before you dig.

Westwood
Westwood Professional Services, Inc.
6200 STONERIDGE MALL ROAD, SUITE 330
PLEASANTON, CA 94588
T: 925.223.8340
westwoodps.com

NO.	DESCRIPTION	DATE	BY	APP. DATE	APP.

ANTELOPE, CALIFORNIA

SIERRA CREEK COMMUNITY PARK
UTILITY PLAN

DATE: 08/31/2026
DRAFTER: JJ
DESIGNER: ZW
CHECKED: RC
PROJECT NO. 41541

REGISTERED PROFESSIONAL ENGINEER ROBERT I. CREE 59425 CIVIL STATE OF CALIFORNIA

C3.1

####

Last Saved by: Czwernich
Plot Date/Time: 8/31/2026 11:54 AM
Drawing: N:_ODE\Pleasanton\41541 NRHPD Sierra Creek Park\Civil\Const\Plans\Onsite\41541-UT (CIVIL)

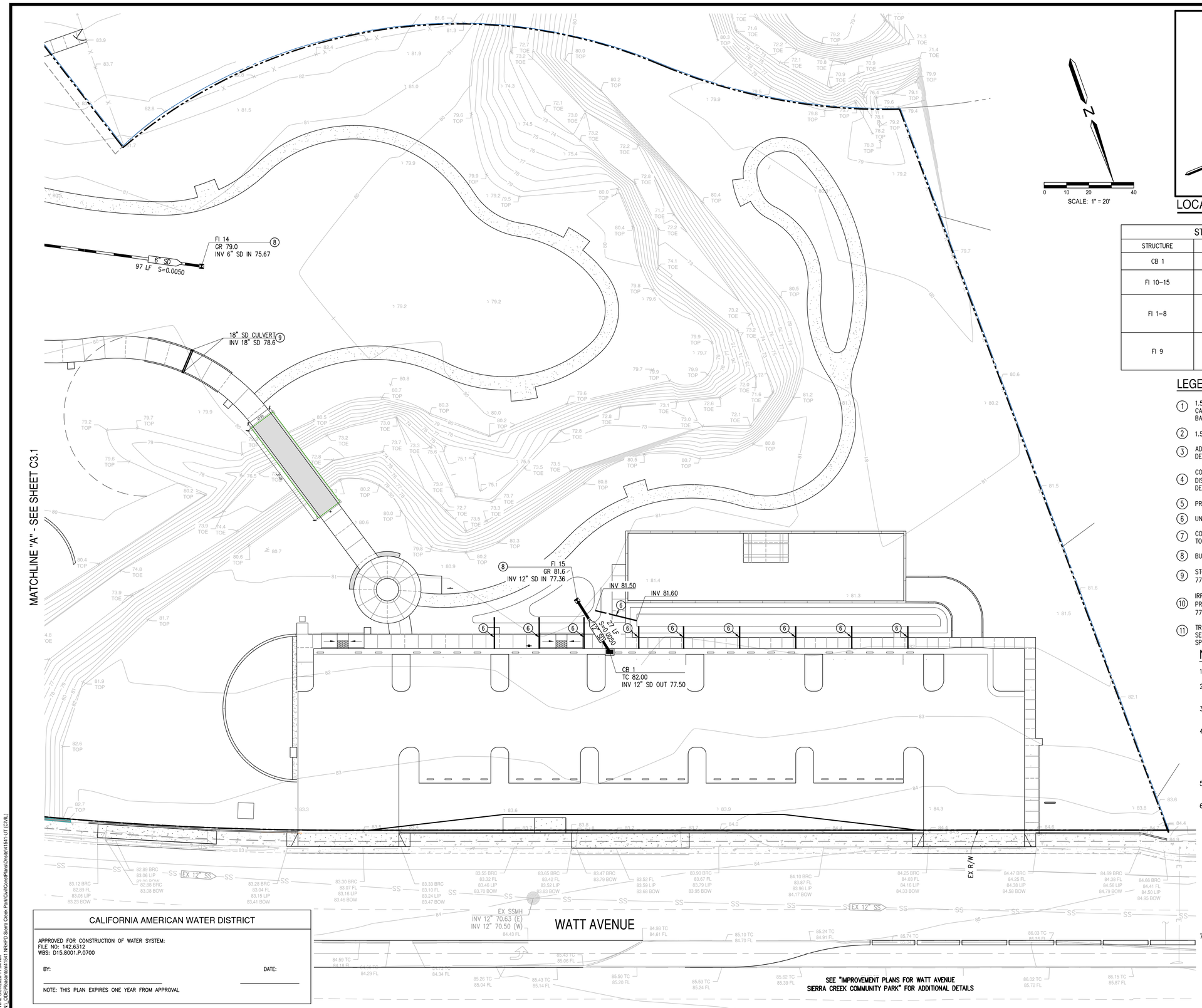

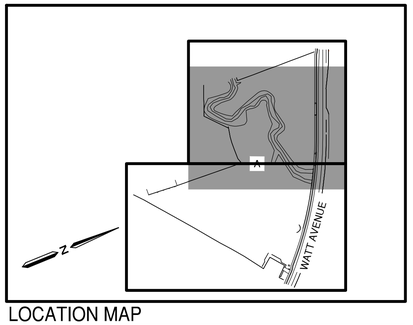

LOCATION MAP

1"=300'

STORM DRAIN STRUCTURE SCHEDULE		
STRUCTURE	TYPE	DESCRIPTION
CB 1	SACRAMENTO COUNTY 9-13B	DROP INLET TYPE B
FI 10-15	CHRISTY V24	V24 DRAIN BOX 20-3/4" X 19-1/4"
FI 1-8	NDS 9" CATCH BASIN	NDS 9"X9" CATCH BASIN (PART NO. 932) W/ NDS GRATE (PART NO. 980) OR APPROVED EQUAL
FI 9	NDS 9" CATCH BASIN	NDS 9"X9" CATCH BASIN (PART NO. 932) W/ NDS ATRIUM GRATE (PART NO. 981) OR APPROVED EQUAL

LEGEND:

1. 1.5" WATER METER & 1.5" WATER SERVICE PER CAW STANDARD DETAILS CAW-ND-W202 & CAW-ND-W204. SEE SHEET C6.3. INSTALL REDUCED PRESSURE BACKFLOW PER UBC LIST OF APPROVED DEVICES.
2. 1.5" WATER SERVICE, INV 3' BELOW FF, SEE PLANS BY OTHERS FOR CONTINUATION
3. ADJUST EX SSMH TO GRADE AS NEEDED PER SACRAMENTO AREA SEWER DISTRICT DETAIL MH-03, SEE NOTE #6 FOR MORE DETAIL
4. CONSTRUCT 30 LF 6" PVC SEWER LOWER LATERAL PER SACRAMENTO AREA SEWER DISTRICT DETAIL LL-01A @2% SLOPE WITH WYE CONNECTION & W/ CLEANOUT PER DETAIL LL-02 AT RIGHT-OF-WAY.
5. PRIVATE SEWER, INV 5' BELOW FF, SEE PLANS BY OTHERS FOR CONTINUATION
6. UNDER SIDEWALK DRAIN PER DETAIL A SHEET C6.1
7. CONNECT TO RUBBER SURFACING DRAINAGE SYSTEM. DRAIN INLET GRATE ELEVATION TO BE SET UNDER RUBBER SURFACING
8. BUBBLE UP FIELD INLET, SEE DETAIL E SHEET C6.1
9. STORM DRAIN CULVERT PER LANDSCAPE PLANS "SIERRA CREEK COMMUNITY PARK – 7781 WATT AVE" DETAIL 5 SHEET L6.1
10. IRRIGATION POC, CONNECT TO EXISTING 2-2" WATER METER AND 3" BACKFLOW PREVENTION DEVICE. SEE LANDSCAPE PLANS "SIERRA CREEK COMMUNITY PARK – 7781 WATT AVE" SHEET L4.1 FOR IRRIGATION DETAILS
11. TRENCHING AND PAVEMENT RESTORATION PER COUNTY OF SACRAMENTO STD 4-64 SEE SHEET C6.2, WATER TRENCH WIDTH PER SACRAMENTO COUNTY CONSTRUCTION SPECIFICATIONS SECTION 19 AND SEWER TRENCH WIDTH PER SASD SECTION 311

NOTES:

1. POTABLE WATER MAIN SHALL MAINTAIN A MINIMUM OF 4' COVER.
2. CONTRACTOR SHALL FIELD VERIFY EXISTING UTILITIES INVERT AND LOCATION PRIOR TO ESTABLISHING CONNECTIONS.
3. CONTRACTOR SHALL MAINTAIN MIN VERTICAL CLEARANCE BETWEEN WATER SERVICE LATERALS AND OTHER UTILITIES.
4. TREE COORDINATION NOTE: WATER LINES, DRAIN LINES, SEWER LINES AND OTHER UTILITIES SHOWN ON THESE PLANS HAVE BEEN COORDINATED WITH REQUIRED TREE LOCATIONS. ELECTRICAL CONDUITS OR OTHER UTILTIES NOT SHOWN ON THESE PLANS SHALL BE LOCATED SO AS TO NOT CONFLICT WITH REQUIRED TREE LOCATIONS. SEE APPROVED LANDSCAPE PLANS FOR LOCATIONS.
5. ALL ONSITE DRAINAGE IMPROVEMENTS SHALL BE CONSIDERED AS PRIVATE FACILITIES AND MAINTAINED BY THE PROPERTY OWNER.
6. SEWER TAP NOTE:
   SACRAMENTO AREA SEWER DISTRICT WILL PERFORM THE SEWER TAP AFTER PAYMENT OF FEES. EMAIL PERMITSERVICES@SACSEWER.COM WITH THE FOLLOWING INFORMATION TO PAY SEWER TAP FEES.
   - APPROVED IMPROVEMENT PLANS (WITH PRE-CONSTRUCTION APPROVAL SIGNATURE FOR LOWER LATERAL ONLY PLANS)
   - ORDER NUMBER
   - CONTRACTOR'S NAME AND PHONE NUMBER

   CONTRACTOR WILL PROVIDE ALL TRAFFIC CONTROL, PAVEMENT CUTTING, EXCAVATION, SHORING, PIPE LAYING, PIPE BEDDING, BACKFILL, AND RESTORATION IN ACCORDANCE WITH THESE PLANS AND THE LOCAL JURISDICTION. AN ACCESS PERMIT IS REQUIRED BEFORE CONNECTING TO THE SACRAMENTO AREA SEWER DISTRICT'S SYSTEM. PLEASE ALLOW 10 BUSINESS DAYS FOR PROCESSING OF THE ACCESS PERMIT.
7. NOT APPROVED FOR PRIVATE UNDERGROUND FIRE SERVICE INSTALLATION. A SEPARATE PLAN SUBMITTAL IS REQUIRED FROM THE INSTALLING CONTRACTOR. SEE SACRAMENTO METROPOLITAN FIRE DISTRICT NOTES.

CALIFORNIA AMERICAN WATER DISTRICT

APPROVED FOR CONSTRUCTION OF WATER SYSTEM:
FILE NO: 142.6312
WBS: D15.8001.P.0700

BY: _____ DATE: _____

NOTE: THIS PLAN EXPIRES ONE YEAR FROM APPROVAL

Know what's **below.**
Call before you dig.

Westwood
Westwood Professional Services, Inc.
6200 STONERIDGE MALL ROAD, SUITE 330
PLEASANTON, CA 94588
T: 925.223.8340
westwoodps.com

NO.	DESCRIPTION	DATE	BY	APP. DATE	APP.

ANTELOPE, CALIFORNIA

SIERRA CREEK COMMUNITY PARK
UTILITY PLAN

DATE: 08/31/2026
DRAFTER: JJ
DESIGNER: ZW
CHECKED: RC
PROJECT NO. #####

REGISTERED PROFESSIONAL ENGINEER ROBERT I. CREEK 59425 CIVIL STATE OF CALIFORNIA

C3.2

####

Last Saved by: Czwernich
Plot Date/Time: 8/31/2026 11:54 AM
Drawing: N:_CDE\Pleasanton\41541 NRHPD Sierra Creek Park\Civil\Const\Plans\Onsite\41541-UT (CIVIL)

STRUCTURAL NOTES

I. GENERAL

A ALL WORK SHALL BE PERFORMED IN ACCORDANCE WITH APPLICABLE SECTIONS OF THE CALIFORNIA BUILDING CODE (CBC) 2022 EDITION, AND ALL OTHER PUBLICATIONS LISTED.

B ALL DRAWINGS SHALL BE READ IN CONJUNCTION WITH THE ARCHITECTURAL, MECHANICAL, ELECTRICAL, ALL CONTRACT DOCUMENTS AND SPECIFICATIONS.

C DETAILS SHOWN ON THE STRUCTURAL DRAWINGS ARE TYPICAL. SIMILAR DETAILS APPLY TO SIMILAR CONDITIONS.

D DIMENSIONS SHOWN SHALL TAKE PRECEDENCE OVER SCALE ON THE PLANS, SECTIONS AND DETAILS. DISCREPANCIES SHALL BE BROUGHT TO THE ATTENTION OF THE ARCHITECT IMMEDIATELY.

E NOTES AND DETAILS ON THE DRAWINGS SHALL TAKE PRECEDENCE OVER GENERAL NOTES AND TYPICAL DETAILS.

F CONSTRUCTION MATERIALS SHALL BE SPREAD OUT IF PLACED ON ROOF OR FLOOR FRAMING MEMBERS. LOAD SHALL NOT EXCEED THE DESIGN LIVE LOAD.

G REVIEW OF THE SHOP DRAWINGS BY THE ARCHITECT/ENGINEER IS FOR GENERAL COMPLIANCE WITH THE INFORMATION GIVEN IN THE CONTRACT DOCUMENTS. THE CONTRACTOR WILL REMAIN RESPONSIBLE FOR ALL ERRORS OF DETAILING, FABRICATION AND FOR THE CORRECT FITTING OF ALL STRUCTURAL MEMBERS INCLUDING COORDINATION OF ALL TRADES.

H ALL DETAIL CHANGES DESIRED SHALL BE SUBMITTED TO THE ARCHITECT/ENGINEER IN WRITING. SHOP DRAWING SUBMITTALS DO NOT CONSTITUTE CHANGES IN WRITING UNLESS ACCOMPANIED BY A LETTER INDICATING ALL PROPOSED CHANGES. ALL SUCH CHANGES SHALL BE CLEARLY IDENTIFIED ON THE SHOP DRAWINGS.

I ALL WORK IS TO BE PERFORMED IN COMPLIANCE WITH THESE CONSTRUCTION DOCUMENTS. ANY DISCREPANCIES ARE TO BE BROUGHT TO THE ATTENTION OF THE ARCHITECT AND THE ENGINEER IMMEDIATELY. REQUIRED REVISED DESIGNS TO CORRECT DEFICIENCIES OR DEVIATIONS SHALL BE PREPARED BY THE DESIGN ARCHITECT OR ENGINEER FOR REVIEW AND APPROVAL BY THE BUILDING INSPECTION DEPARTMENT AT THE CONTRACTOR'S EXPENSE. ALL CORRECTIVE WORK IS TO BE COMPLETED IN ACCORDANCE WITH THE APPROVED REVISED CONSTRUCTION DOCUMENTS.

II. FOUNDATION DESIGN

A. GENERAL: THE FOLLOWING DESIGN CRITERIA AND SITE PREPARATION ARE TO BE PER THE FOLLOWING GEOTECHNICAL INVESTIGATION REPORT WHICH IS TO BE PART OF THESE CONSTRUCTION DOCUMENTS:

GEOTECHNICAL ENGINEERING REPORT
SIERRA CREEK PARK
WATT AVENUE
ANTELOPE, CA

BY: ENGEO
17278 GOLDEN VALLEY PARKWAY
ANTELOPE, CA

DATED: DECEMBER 12, 2022
PROJECT NO: 21219.000.001

B. 1 SITE PREPARATION: GRADE AND PREPARE THE SITE PER THE RECOMMENDATIONS OF THE GEOTECHNICAL ENGINEERING REPORT.

2 PREPARE AND COMPACT THE FOUNDATION PADS AND AREAS TO SUPPORT FLATWORK PER THE RECOMMENDATIONS OF THE GEOTECHNICAL ENGINEERING REPORT.

C. THE PROPOSED SITE STRUCTURES ARE TO BE SUPPORTED ON SHALLOW REINFORCED CONCRETE SPREAD OR CONTINUOUS FOOTINGS (SUPPORTED BY UNDISTURBED NATIVE SOIL OR ENGINEERED FILL).

1 THE ALLOWABLE SOIL BEARING PRESSURE IS 2500 PSF FOR DEAD PLUS LIVE LOAD; THIS VALUE CAN BE INCREASED BY 30 PERCENT TO INCLUDE TRANSIENT LOADS SUCH AS SEISMIC OR WIND LOADS.

2 FOOTINGS ARE TO BE A MINIMUM OF 24 INCHES BELOW PAD SUBGRADE (SOIL GRADE) OR ADJACENT EXTERIOR GRADE, WHICHEVER IS LOWER.

3 FOOTINGS ARE TO HAVE A MINIMUM WIDTH OF 18 INCHES. (CONTINUOUS) OR 24 INCHES (ISOLATED).

4 RESISTANCE TO LATERAL DISPLACEMENT CAN BE COMPUTED USING AN ALLOWABLE FRICTION FACTOR OF 0.30 ACTING BETWEEN THE BASE OF THE FOUNDATIONS AND THE SUPPORTING SUBGRADE OR BY USING AN ALLOWABLE FLUID PASSIVE PRESSURE OF 300 POUNDS PER CUBIC FOOT ACTING AGAINST THE APPROPRIATE VERTICAL FOOTING FACES. FRICTIONAL AND PASSIVE RESISTANCE OF THE SOIL MAY BE COMBINED BY REDUCING THE PASSIVE PRESSURE BY 50 PERCENT.

D. RETAINING WALLS (LEVEL BACKFILL)

1. 30 PCF ACTIVE PRESSURE

2. 50 PCF AT-REST PRESSSURE

III. CONCRETE

A. GENERAL: ALL CONCRETE WORK SHALL BE PERFORMED IN ACCORDANCE WITH THE LATEST EDITION OF THE ACI MANUAL OF CONCRETE PRACTICE AND THE CBC.

B. REINFORCING MATERIAL:
1. DEFORMED ASTM A615, GRADE 40 (#4 BARS AND SMALLER)
GRADE 60 (#5 BARS AND LARGER)

2. WELDED WIRE FABRIC, ASTM A185 – PROVIDE FROM SHEETS ONLY – ROLLED FABRIC PROHIBITED.

C. CONCRETE STRENGTH:

PSI @ 28 DAYS	MAX AGG	MAX SLUMP
WALL 3000	3/4"	4"
FTGS 3000	1 1/2"	4"

ALL CONCRETE TO BE NORMAL WEIGHT, UNLESS NOTED OTHERWISE

D. CEMENT: TYPE II OR V, ASTM C150. VERIFY WITH GEOTECHNICAL REPORT.

E. AGGREGATES: NATURAL SANDS AND ROCK, ASTM C33.

F. ADMIXTURES: ONLY AS APPROVED BY THE ENGINEER.

G. NON-SHRINK GROUT: SHALL BE MASTERFLOW 928 GROUT AS MANUFACTURED BY MASTER BUILDERS OR APPROVED EQUAL. IT SHALL BE FLOWABLE, WITH A MINIMUM 7 DAY COMPRESSIVE STRENGTH OF 5000 PSI.

H. WELDING OF INSERTS: ALL WELDING OF REINFORCING STEEL SHALL BE WITH LOW-HYDROGEN ELECTRODES IN ACCORDANCE WITH THE LATEST RECOMMENDATIONS OF THE AMERICAN WELDING SOCIETY (A.W.S D1.4-18).

I. LAP SPLICES: #6 & SMALLER: 42db GRADE 40 REINF
64db GRADE 60 REINF
#7 & LARGER: 78db GRADE 60 REINF
WELDED WIRE REINF: 59db

J. COVER TO BARS: UNLESS OTHERWISE SHOWN OR NOTED, COVER TO REINFORCING BARS SHALL BE AS STATED PER ACI 318-19 SECTION 20.5.1

K. CONCRETE CURING: KEEP CONCRETE CONTINUOUSLY WET FOR 7 DAYS (MEMBRANE CURING) AS APPROVED BY THE ENGINEER.

L. FORM REMOVAL: SIDE OF FOOTINGS AND SLABS ON GRADE, MINIMUM 2 DAYS.

M. VIBRATION: VIBRATE ALL CONCRETE IN PLACE WITH A MECHANICAL VIBRATOR USED BY EXPERIENCED PERSONNEL.

N. TESTING: IN ACCORDANCE WITH ACI 318-19, SECTION 1.6.3.

IV. SPECIAL INSPECTION REQUIREMENTS

A GENERAL: SPECIAL INSPECTION SHALL BE PERFORMED BY QUALIFIED INSPECTORS RETAINED BY THE OWNER AND APPROVED BY THE BUILDING INSPECTION DEPARTMENT TO PROVIDE SPECIAL INSPECTIONS IN ACCORDANCE WITH CHAPTER 17 OF THE CALIFORNIA BUILDING CODE (CBC). THE RESPONSIBILITIES OF THE SPECIAL INSPECTORS ARE:

1 FIELD AND/OR LAB INSPECT ALL STRUCTURAL ELEMENTS OF THE STRUCTURE AS REQUIRED BY CBC CHAPTER 17, THE BUILDING INSPECTION DEPARTMENT, AND THESE CONSTRUCTION DOCUMENTS.

2 ALL DEFICIENCIES IN THE QUALITY OF THE CONSTRUCTION AND ANY DEVIATIONS FROM THE APPROVED CONSTRUCTION DOCUMENTS ARE TO BROUGHT TO THE ATTENTION OF THE CONTRACTOR FOR CORRECTION (AND TO THE BUILDING INSPECTION DEPARTMENT, AND THE ENGINEER FOR THEIR RECORDS). THE CORRECTED WORK MUST BE RE-INSPECTED UNTIL IT MEETS THE REQUIRED STANDARDS FOR QUALITY AND CONFORMANCE WITH THE CONSTRUCTION DOCUMENTS. IF THE WORK IS NOT CORRECTED IT IS TO BE BROUGHT TO THE ATTENTION OF THE ENGINEER AND THE BUILDING INSPECTION DEPARTMENT IMMEDIATELY.

3 REQUIRED REVISED DESIGNS TO CORRECT DEFICIENCIES OR DEVIATIONS SHALL BE PREPARED BY THE DESIGN ENGINEER FOR APPROVAL BY THE BUILDING INSPECTION DEPARTMENT AT THE CONTRACTOR'S EXPENSE. ALL CORRECTIVE WORK IS TO BE COMPLETED IN ACCORDANCE WITH THE APPROVED REVISED CONSTRUCTION DOCUMENTS.

4 A FINAL INSPECTION REPORT, SIGNED BY THE SPECIAL INSPECTOR, SHALL BE SUBMITTED TO THE BUILDING INSPECTION DEPARTMENT AND THE ENGINEER UPON COMPLETION OF EACH ELEMENT REQUIRING SPECIAL INSPECTION. THE REPORT MUST CERTIFY THAT THE WORK WAS IN COMPLIANCE, BOTH FOR QUALITY AND NON-DEVIATION, WITH THE APPROVED CONSTRUCTION DOCUMENTS AND AUTHORIZED CHANGES.

B STATEMENT OF SPECIAL INSPECTIONS (PER CBC 1704.3): THE FOLLOWING MATERIALS, COMPONENTS, AND WORK REQUIRED ARE TO HAVE SPECIAL INSPECTION OR TESTING INCLUDED ARE: THE EXTENT AND TYPE OF EACH SPECIAL INSPECTION; THE TYPE AND EXTENT OF EACH TEST; ADDITIONAL REQUIREMENTS FOR SPECIAL INSPECTION OR TESTING FOR SEISMIC OR WIND RESISTANCE AS SPECIFIED IN CBC SECTION 1705.10 AND 1705.11.

1 CONCRETE CONSTRUCTION: SPECIAL INSPECTION AND TESTING OF THE CONCRETE CONSTRUCTION IS REQUIRED PER CBC SECTION 1705.3 AND CBC TABLE 1705.3.

a PERIODIC INSPECTION OF REINFORCING STEEL

b PERIODIC INSPECTION VERIFYING THE USE OF THE REQUIRED DESIGN MIX

c PERIODIC INSPECTION FOR MAINTENANCE OF SPECIFIED CURING TEMPERATURE AND TECHNIQUES

e PERIODIC INSPECTION OF POST INSTALLED ANCHORS.

2 SOILS: SPECIAL INSPECTIONS OF THE SOILS ARE TO BE PROVIDED BY THE OFFICE OF THE PROJECT GEOTECHNICAL ENGINEER FOR:

a ON-SITE TO VERIFY THE BOTTOM OF THE EXCAVATIONS DURING GRADING.

b COMPACTION TESTING OF FILL PLACEMENT.

c OBSERVE THE BOTTOM OF FOOTING EXCAVATIONS PRIOR TO POURING/PLACING CONCRETE.

ABBREVIATIONS

ADJ	ADJACENT
ALT	ALTERNATE
A BOLT(S)	ANCHOR BOLT(S)
ARCH DRWGS	ARCHITECTURAL DRAWINGS
@	AT
BM	BEAM
BRG	BEARING
BLK	BLOCK
BLKG	BLOCKING
BOT	BOTTOM
BRDG	BRIDGING
CBC	CALIFORNIA BUILDING CODE
CFS	COLD-FORMED STEEL
CL	CENTER LINE
CTRD	CENTERED
CLR	CLEAR
COL	COLUMN
CONC	CONCRETE
CMU	CONCRETE MASONRY UNIT
CONSTR	CONSTRUCTION
CONT	CONTINUOUS
CTRSK	COUNTERSINK
DIAG	DIAGONAL
DIA	DIAMETER
DBL	DOUBLE
DF	DOUGLAS FIR (LARCH)
DRWGS	DRAWINGS
(E)	EXISTING
EA	EACH
EN	EDGE NAILING
EXIST	EXISTING
FTG	FOOTING
FNDN	FOUNDATION
FLR	FLOOR
FRAM	FRAMING
GL	GRID LINE
GLB	GLUED-LAMINATED BEAM
HORIZ	HORIZONTAL
ICC	INTERNATIONAL CODE COUNCIL
MAX	MAXIMUM
MIN	MINIMUM
N/A	NOT APPLICABLE
(N)	NEW
NTS	NOT TO SCALE
OPT	OPTIONAL
PAF	POWDER ACTUATED FASTENER
PERPEN	PERPENDICULAR
PL	PLATE
PLY	PLYWOOD
PREMAN	PREMANUFACTURED
PRESS TRTD	PRESSURE TREATED
REINF	REINFORCING
REQD	REQUIRED
SCHED	SCHEDULE
SHT	SHEET
SIM	SIMILAR
SMS	SHEET METAL SCREW
SQ	SQUARE
STD	STANDARD
STL	STEEL
TOEN	TOE-NAIL
T & B	TOP & BOTTOM
TPI	TRUSS PLATE INSTITUTE
TYP	TYPICAL
UNO	UNLESS NOTED OTHERWISE
VERT	VERTICAL
W/	WITH

SYMBOLS

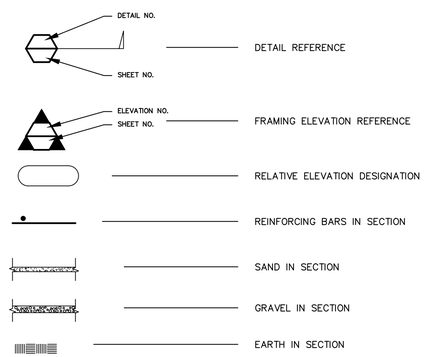

DESIGN CRITERIA

WIND DESIGN DATA

BASIC WIND SPEED: 95 MPH

WIND EXPOSURE: EXPOSURE "C"

RISK CATEGORY: II

VELOCITY PRESSURE (q_h) = 16.7 PSF

EARTHQUAKE DESIGN DATA

SEISMIC IMPORTANCE FACTOR: Ie = 1.0

SHORT TERM SPECTRAL RESPONSE: S_S = 0.480 S_{DS} = 0.450

1 SECOND SPECTRAL RESPONSE: S_1 = 0.230 S_{D1} = 0.330

SITE CLASS: "D"

SEISMIC DESIGN CATEGORY: "D"

BASIC SEISMIC FORCE RESISTING SYSTEM: GROUND SUPPORTED CANTILEVERED WALLS & FENCES (ASCE 7-16 TABLE 15.4-2)

SEISMIC RESPONSE COEFFICIENT: C_S = 0.360

RESPONSE MODIFICATION FACTOR: R = 1.25

DESIGN BASE SHEAR: C_S x EFFECTIVE SEISMIC WEIGHT OF THE BUILDING

ANALYSIS DESIGN PROCEDURE: EQUIVALENT LATERAL FORCE PROCEDURE

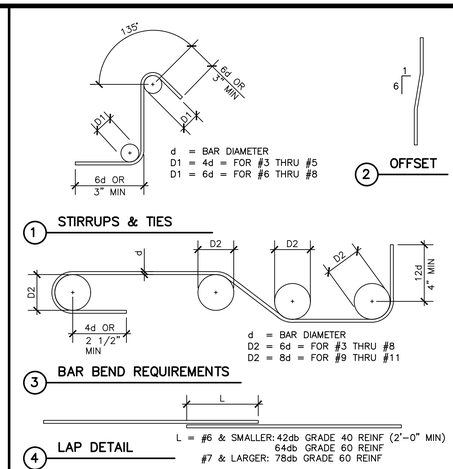

A S1.1 REINFORCING DETAILS

NO SCALE

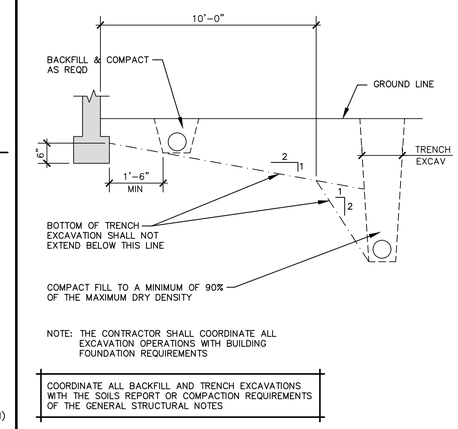

B S1.1 EXCAVATION PARALLEL TO FOOTING

NO SCALE

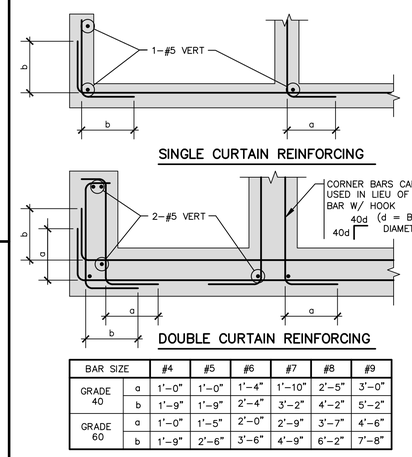

BAR SIZE		#4	#5	#6	#7	#8	#9
GRADE 40	a	1'-0"	1'-0"	1'-4"	1'-10"	2'-5"	3'-0"
	b	1'-9"	1'-9"	2'-4"	3'-2"	4'-2"	5'-2"
GRADE 60	a	1'-0"	1'-5"	2'-0"	2'-9"	3'-7"	4'-6"
	b	1'-9"	2'-6"	3'-6"	4'-9"	6'-2"	7'-8"

C S1.1 PLAN AT TYP FOOTING REINFORCING

NO SCALE

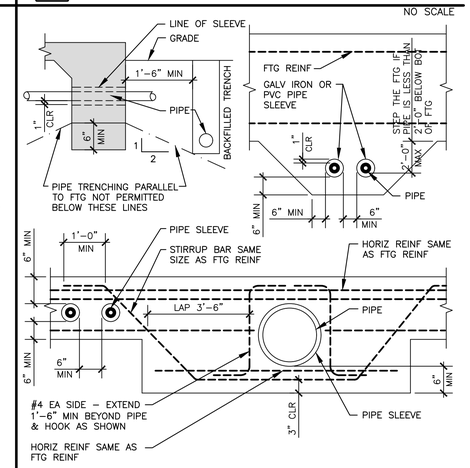

D S1.1 PIPE EXCLUSION DETAILS

NO SCALE

E S1.1 NOT USED

NO SCALE

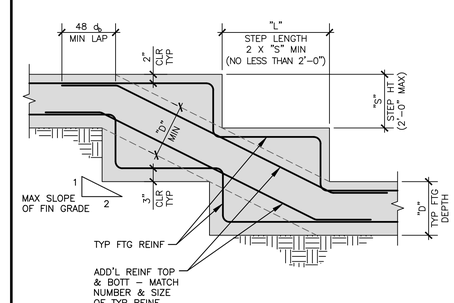

F S1.1 SECTION AT STEPPED FOOTING

NO SCALE

811 Know what's below. Call before you dig.

PELTON WYLIE FAHRNEY ENGINEERING, INC
STRUCTURAL ENGINEERS
2813 COFFEE ROAD, SUITE D1
MODESTO, CA 95355
TEL: (209)575-9619|WWW.PWFENG.COM

NO.	DESCRIPTION	DATE	BY	APP. DATE	APP.

ANTELOPE, CA

SIERRA CREEK COMMUNITY PARK
STRUCTURAL NOTES & DETAILS

DATE: JAN 2026
DRAFTER: JAW
DESIGNER: NF
CHECKED: NF
PROJECT NO. ODE017-22

REGISTERED PROFESSIONAL ENGINEER NICHOLAS FAHRNEY No. S5998 Exp. 9/30/26 STRUCTURAL STATE OF CALIFORNIA

S1.1
SHEET 1 OF 2

Last Saved by: JeffF
Plot Date/Time: 2026/02/06 10:07 AM
Drawing: P:\JOBS\ODE - O'DELL ENGINEERING\2022\ODE 017-22 - Sierra Creek Park\DRAWINGS\S1.1

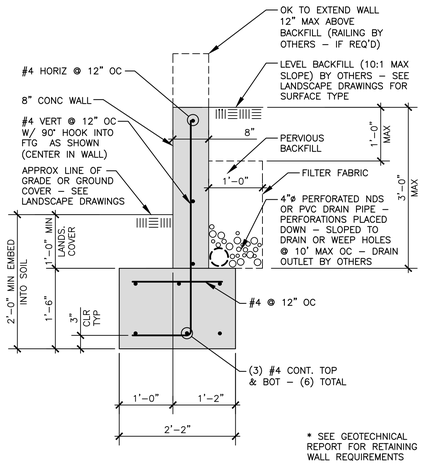

A S1.2 SECTION AT RETAINING WALL (3'-0" MAX RETAINED) 3/4" = 1'-0"

B S1.2 NOT USED 3/4" = 1'-0"

C S1.2 NOT USED 3/4" = 1'-0"

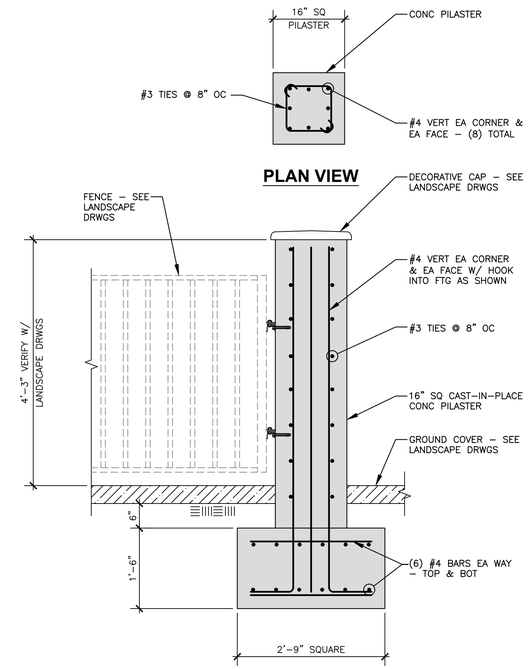

D S1.2 SECTION AT FENCE PILASTER 3/4" = 1'-0"

NO SCALE

Know what's below. Call before you dig.

PELTON WYLIE & FAHRNEY ENGINEERING, INC
STRUCTURAL ENGINEERS
2813 COFFEE ROAD, SUITE D1
MODESTO, CALIFORNIA 95355
TEL: (209)575-9619|WWW.PWFENG.COM

NO.	DESCRIPTION	DATE	BY	APP. DATE	APP.

ANTELOPE, CA

SIERRA CREEK COMMUNITY PARK
STRUCTURAL DETAILS

DATE: JAN 2026
DRAFTER: JAW
DESIGNER: NF
CHECKED: NF
PROJECT NO. ODE017-22

REGISTERED PROFESSIONAL ENGINEER NICOLAS FAHRNEY No. S5998 Exp. 9/30/26 STRUCTURAL STATE OF CALIFORNIA

S1.2
SHEET 2 OF 2

Last Saved by: jeff
Plot Date/Time: 01/28/2026 10:07 AM
Drawing: P:\OBS\ODE - O'DELL ENGINEERING\2022\ODE 017-22 - Sierra Creek Park\DRAWING\S\S1.1

PEZZONI ENGINEERING, INC.
CONSULTING ELECTRICAL ENGINEERS
1150 9TH Street Suite #1415 Modesto, CA 95354
PHONE: 209 . 554 . 4602
HTTP://WWW.PEZENGR.COM

PEZZONI ENGINEERING, INC. © Copyrighted 2026

GENERAL POWER LEGEND

- CONCRETE PULL BOX –SIZE AS NOTED – LIDS AS NOTED 'P' POWER, 'S' SIGNAL, 'F' FIRE ALARM & 'D' DATA; '–T' DENOTES TRAFFIC LID
- CONDUIT –SURFACE MOUNTED OR ABOVE CEILING –EMT WITH COMPRESSION FITTING UNLESS NOTED ON PLANS
- CONDUIT –CONCEALED BELOW FLOOR IN EMT OR UNDERGROUND IN PVC SCH 40 WITH IMC ELBOWS
- HOMERUN TO PERSPECTIVE PANEL OR CABINET –BRANCH CIRCUIT WITH OUT FURTHER DESIGNATION IS A #12 WIRE CIRCUIT
- FLEX
- TERMINAL CABINET
- PANEL BOARD –SEE SCHEDULE
- MOTOR/EXHAUST FAN –N.I.E.S. –CONNECT AS REQUIRED
- GFCI DUPLEX RECEPTACLE +15" A.F.F. FROM BOTTOM OF BOX U.O.N.
- EQUIPMENT AND/OR CONTROL CONNECTION POINT. MAKE CONNECTION TO EQUIPMENT AS REQUIRED.
- JUNCTION BOX – SINGLE GANG BOX
- FUSED DISCONNECT SWITCH –SIZE AS NOTED –30A. SHOWN
- $HP MOTOR RATED DISCONNECT SWITCH
- XX FIXTURE IDENTIFICATION –LETTER INDICATES FIXTURE TYPE –NUMERAL INDICATES LAMP QUANTITY AND WATTAGE

GENERAL ELECTRICAL NOTES

1. PROVIDE ALL LABOR, MATERIALS, TOOLS, PLANT EQUIPMENT, TRANSPORTATION AND ALL PERFORM ALL OPERATIONS NECESSARY FOR THE PROPER EXECUTION AND COMPLETION OF ALL ELECTRICAL WORK REQUIRED FOR THE COMPLETE AND OPERATING SYSTEMS AS OUTLINED WITHIN THE SCOPE OF WORK.
2. UNDERWRITERS LABORATORIES, INC., SHALL MEET THEIR REQUIREMENTS AND SHALL BEAR THEIR LABEL WHEREVER STANDARDS HAVE BEEN ESTABLISHED AND LABEL SERVICE IS REGULARLY FURNISHED BY THAT AGENCY.
3. THE SIZE AND LOCATIONS OF EQUIPMENT ARE SHOWN TO SCALE WHEREVER POSSIBLE, CONTRACTOR SHALL MAKE USE OF ALL DATA IN ALL CONTRACT DOCUMENTS AND VERIFY THIS INFORMATION AT THE SITE.
4. CONDUCTORS SHALL BE COPPER CONDUCTORS TYPE AS NOTED ON CONSTRUCTION DOCUMENTS.
5. ALL REQUIRED CONDUITS SHALL BE PROVIDED BY E.C. LOW VOLTAGE WIRING SHALL BE BY MECHANICAL CONTRACTOR, LINE VOLTAGE (50 VOLTS OR MORE) SHALL BE BY ELECTRICAL CONTRACTOR.
6. DO NOT PENETRATE STRUCTURAL MEMBERS, INCLUDING BEAMS, COLUMNS, OR FOOTINGS, WITHOUT PRIOR WRITTEN CONSENT OF THE DISTRICT'S STRUCTURAL ENGINEER. SHOULD IT BECOME NECESSARY TO PENETRATE SUCH MEMBERS, NOTIFY THE DISTRICT IN WRITING WITHOUT DELAY, PRIOR TO PROCEEDING WITH CONSTRUCTION AROUND SUCH MEMBERS.
7. ALL ELECTRICAL WORK SHALL CONFORM WITH THE 2022 CALIF. ELECTRICAL CODE CALIFORNIA TITLE 17, 19 & 24 ALONG WITH N.F.P.A. STANDARDS AND THE STATE FIRE MARSHAL'S REQUIREMENTS.
8. ALL WORK TO BE IN ACCORDANCE WITH REQUIREMENTS OF STATE & GOVERNING LOCAL FIRE CODES AND BUILDING CODES.
9. WHERE EXISTING CONSTRUCTION IS CUT, DAMAGED, OR REMODELED, PATCH WITH MATERIALS TO MATCH IN KIND, QUALITY, AND PERFORMANCE.
10. CONTRACTOR SHALL ASSUME SOLE RESPONSIBILITY FOR SAFETY OF ALL PERSONS ON OR ABOUT THE CONSTRUCTION SITE, IN ACCORDANCE WITH APPLICABLE LAWS AND CODES. GUARD ALL HAZARDS IN ACCORDANCE WITH THE SAFETY PROVISIONS OF THE LATEST MANUAL OF ACCIDENT PREVENTION PUBLISHED BY THE ASSOCIATED GENERAL CONTRACTORS OF AMERICA.
11. CLEAN ALL EXPOSED SURFACES AND NEW EQUIPMENT AFTER COMPLETION.
12. OPERATED DEVICES SUCH AS, BUT NOT LIMITED TO, TELE/DATA OUTLETS, RECEPTACLE OUTLETS AND LIGHT SWITCHES INSTALLED IN AREAS NOT RESTRICTED TO AUTHORIZED MAINTENANCE PERSONAL SHALL BE MOUNTED AT A MINIMUM OF +15" AFF., AS MEASURED FROM THE BOTTOM OF THE DEVICE OUTLET BOX, AND MAXIMUM OF +48" AFF., AS MEASURED FROM THE TOP OF THE DEVICE OUTLET BOX.
13. ALL CHANGE ORDER PROPOSALS AND CHANGE ORDERS, BOTH ADDITIVE AND DEDUCTIVE, SHALL BE BASED UPON AND BE ACCOMPANIED BY A DETAILED MATERIALS AND LABOR BREAKDOWN FOR EACH SPECIFIC TASK AND/OR ITEM. THE BREAKDOWN SHALL INCLUDE ACTUAL MATERIALS COSTS PLUS OVERHEAD AND PROFIT, AS WELL AS LABOR UNITS BASE UPON THE MOST RECENT NECA MANUAL OF LABOR UNITS (NECA INDEX #4090) OR EQUIVALENT PUBLICATION FOR EACH SPECIFIC TASK AND ITEM. LABOR COSTS SHALL BE COMPUTED AS OUTLINED WITHIN THE GENERAL CONDITIONS, BASED UPON THE NECA LABOR TABLES FOR EACH TASK REQUIRED. MATERIALS COSTS SHALL INCLUDE ACTUAL CONTRACTOR INVOICE PLUS NO MORE THAN 15% MARKUP. THE OWNER AND CONTRACTOR AGREE TO THE ABOVE CHANGE ORDER COST PROCEDURE, FOR BOTH ADDITIVE AND DEDUCTIVE CHANGE ORDERS.
14. ALL PERSONNEL WORKING WITH ENERGIZED EQUIPMENT WITHIN THE RESTRICTED ZONE PER NFPA–70E SHALL COMPLY WITH ALL NFPA–70E AND OSHA REQUIREMENTS AND BE ARC FLASH SAFETY CERTIFIED.
15. CONDUITS FOR ELECTRICAL OR OTHER UTILTIES SHALL BE LOCATED SO AS TO NOT CONFLICT WITH REQUIRED TREE LOCATIONS FOR STREETS AND PARKING LOTS.

ELECTRICAL COMPLIANCE NOTES

THE INTENT OF THE DRAWINGS AND SPECIFICATION IS TO CONSTRUCT THE PROPOSED BUILDING IN ACCORDANCE WITH TITLE 24, CALIFORNIA CODE OF REGULATIONS. ALL WORK PERFORMED UNDER THIS CONTRACT SHALL CONFORM TO THE FOLLOWING CODES AND REGULATIONS AS APPLICABLE:

2022 CALIFORNIA ADMINISTRATIVE CODE (CAC)
PART 1, TITLE 24, CALIFORNIA CODE OF REGULATIONS (CCR)
2022 CALIFORNIA BUILDING CODE (CBC)
PART 2, TITLE 24, CCR
BASED ON THE 2021 INTERNATIONAL BUILDING CODE (IBC)
2022 CALIFORNIA ELECTRICAL CODE (CEC)
PART 3, TITLE 24, CCR
BASED ON THE 2020 NATIONAL ELECTRICAL CODE (NEC)
2022 CALIFORNIA MECHANICAL CODE (CMC)
PART 4, TITLE 24, CCR
BASED ON THE 2021 UNIFORM MECHANICAL CODE (UMC)
2022 CALIFORNIA PLUMBING CODE (CPC)
PART 5, TITLE 24, CCR
BASED ON THE 2021 UNIFORM PLUMBING CODE (UPC)
2022 CALIFORNIA FIRE CODE (CFC)
PART 9, TITLE 24, CCR
BASED ON THE 2021 INTERNATIONAL FIRE CODE (IFC)
2022 NFPA 72, NATIONAL FIRE ALARM & SIGNALING CODE
w/ CALIFORNIA AMENDMENTS.

UNLESS OTHERWISE STATED, IT IS INTENDED THAT THE ABOVE CODES AND REGULATIONS REFER TO THE LATEST EDITION OR REVISION IN EFFECT ON THE DATE OF THE CONTRACT. NOTHING ON THE DRAWING IS TO BE CONSTRUED AS REQUIRING OR PERMITTING WORK THAT IS CONTRARY TO THE ABOVE LISTED CODES AND REGULATIONS, OR OTHER LOCAL, STATE OR FEDERAL CODES OR REGULATIONS WHICH MAY BE APPLICABLE.

ELECTRICAL ABBREVIATIONS

Δ	DELTA CONNECTED
Y	WYE CONNECTED
0	PHASE
A	AMPERES
AC	ALTERNATING CURRENT
ACT	ABOVE COUNTERTOP/BACKSPLASH
AFF	ABOVE FINISHED FLOOR
AL	ALUMINUM
APPROX	APPROXIMATE
AUTO	AUTOMATIC
AUX	AUXILIARY
ALT	ALTERNATE
AWG	AMERICAN WIRE GAUGE
B	BARE
BC	BARE COPPER GROUND
BKBD	BACKBOARD
BRKR	BREAKER
BLDG	BUILDING
C	CONDUIT OR CONTRACTOR
CAB	CABINET
CATV	CABLE TELEVISION
CKT	CIRCUIT
CLG	CEILING
COMM	COMMUNICATION
CONN	CONNECT
CONT	CONTINUATION OR CONTINUED
COORD	COORDINATE
CR	CONTROL RELAY
CT	CURRENT TRANSFORMER
CU	COPPER
DC	DIRECT CURRENT
DISC	DISCONNECT
DIST	DISTRIBUTION
(E)	EXISTING
EC	ELECTRICAL CONTRACTOR
EL, ELEV	ELEVATION
ELECT	ELECTRICAL
EMT	ELECTRICAL METALLIC TUBING
EOL	END OF LINE
ENCL	ENCLOSURE
EP	EXPLOSION PROOF
EQUIP	EQUIPMENT
ETC	ET CETERA
EVAP	EVAPORATOR
(F)	FUTURE
FA	FIRE ALARM
FACP	FIRE ALARM CONTROL PANEL
FLA	FULL LOAD AMPS
FLEX	FLEXIBLE
FLUOR	FLUORESCENT
FS	FLOW SWITCH
GALV	GALVANIZED
GND	GROUND
GC	GENERAL CONTRACTOR
HI	HIGH
HV	HIGH VOLTAGE
HVAC	HEATING, VENTILATION, AIR CONDITIONING
IDF	INTERMEDIATE DISTRIBUTION FRAME
INCAN	INCANDESCENT
INST	INSTANTANEOUS
KV	KILOVOLTS
KVA	KILOVOLT AMPERES
KW	KILOWATTS
LB	ELBOW
LF	LINEAR FEET
LV	LOW VOLTAGE
M	MOTOR
MAX	MAXIMUM
MCA	MINIMUM CIRCUIT AMPS
MCC	MOTOR CONTROL CENTER
MCM	THOUSAND CIRCULAR MILLS
MECH	MECHANICAL
MFG	MANUFACTURER
MIN	MINIMUM
MPOE	MAIN POINT OF ENTRY
MSB	MAIN SWITCHBOARD
N	NEUTRAL
(N)	NEW
NA	NON–AUTOMATIC
NAC	NOTIFICATION APPLIANCE CIRCUIT
NC	NORMALLY CLOSED
NL	NIGHT LIGHT
OC	ON CENTER
OH	OVERHEAD
OL	THERMAL OVERLOAD RELAY
OT	OVER TEMPERATURE
OSHPD	OFFICE OF STATEWIDE HEALTH PLANNING AND DEVELOPMENT
PA	PUBLIC ADDRESS
PB	PULL BOX
PNL	PANEL
PH	PHASE
PRI	PRIMARY
PS	PRESSURE SWITCH
PWR	POWER
(R)	REMOVE(D)
RA	REMOTE ANNUNCIATOR
REQD	REQUIRED
REQMTS	REQUIREMENTS
RGP	REDUNDANT GROUND PATH
RM	ROOM
RECP	RECEPTACLE
SCH	SCHEDULE
SEC	SECONDS, SECONDARY
SIG	SIGNAL
SPECS	SPECIFICATIONS
SW	SWITCH
SWD	SWITCHED
SP	SPARE
STD	STANDARD
STR	STRANDED
SWBD	SWITCHBOARD
TEL	TELEPHONE
TEMP	TEMPERATURE
TH	THERMOSTAT
TRANSF	TRANSFORMER
TYP	TYPICAL
TSP	TWISTED SHIELDED PAIR
UG	UNDERGROUND
UNO	UNLESS NOTED OTHERWISE
V	VOLTS
VA	VOLT AMPS
VFD	VARIABLE FREQUENCY DRIVE
VM	VOLT METER
W/	WITH
W/O	WITHOUT
WP	WEATHERPROOF
WHD	WATT HOUR DEMAND METER
WM	WATT METER
WH	WATER HEATER
XFMER	TRANSFORMER
(XR)	REMOVE AND RELOCATE(D)

811 Know what's below. Call before you dig.

Westwood
Westwood Professional Services, Inc.
8200 STONERIDGE MALL ROAD, SUITE 330
PLEASANTON, CA 94588
T: 925.223.8340
westwoodps.com

NO.	DESCRIPTION	DATE	BY	APP. DATE	APP.

NHRPD SIERRA CREEK PARK
7781 WATT AVE, ANTELOPE
GENERAL NOTES, ABBREVIATIONS AND ELECTRICAL SYMBOLS

DATE: 08/14/2025
DRAFTER: CCM
DESIGNER: KLP
CHECKED: KLP
PROJECT NO.

REGISTERED PROFESSIONAL ENGINEER KEVIN L. PEZZONI NO. 16268 EXP. 12/31 ELECTRICAL STATE OF CALIFORNIA

EO.1

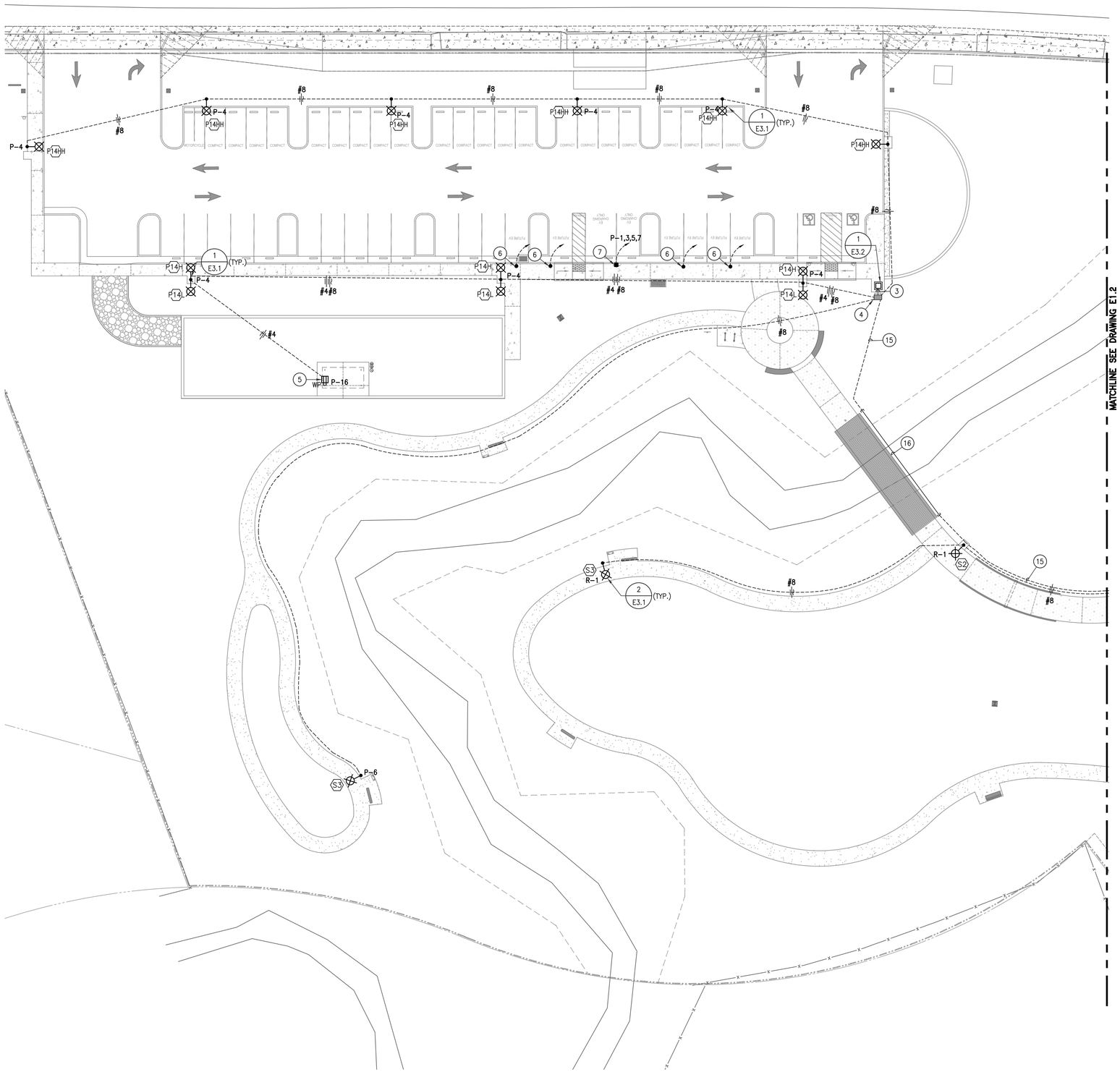

1 PARTIAL SITE PLAN ELECTRICAL

SCALE: 1"=20'-0"

PLAN NOTES:

1. (N) SMUD XFMER PAD W/BOLLARD PROTECTION PER SMUD REQMTS. –INSTALL (N) 4" C. PRIMARY PER SMUD DRAWINGS.
2. (N) 3"C. W/FEEDER PER SMUD REQMTS. FOR SECONDARY FEEDER.
3. (N) 1–3" & 5–2"C. PATHWAYS FROM PULLBOX INTO PEDESTAL.
4. (N) N36 POWER PULLBOX PER DETAIL 5/E4.1.
5. (N) GFCI RECEPTACLE COORDINATE EXACT LOCATION W/CITY –INSTALL W/1" RMC RISER INTO A FD BOX.
6. (N) 2" C.O. FOR (F) EV CHARGER –ROUTE TO (N) N36 PULLBOX (NOTE #4) –INSTALL CONDUIT STUB PER DETAIL 4/E4.1.
7. (N) DUAL 7.2KW –208V –1PH EV PEDESTAL CHARGER SEE DETAIL 3/E3.1 –INSTALL (N) 2"C. W/4 #6 THWN CU & #10 CU GND VIA PULLBOX (NOTE #4).
8. CONNECT (N) BLDG PANEL (100A –120/240V –1PH –3W) FURNISHED BY MFR. –INSTALL (5X) (N) 20A–1P BREAKERS WITHIN (E) SPACES –LABEL AS "LTG PATHWAYS NORTH ", "LTG PATHWAYS PLAZA ", "LTG PATHWAYS SOUTH ", "RECP AMP "& "RECP AMP".
9. (N) 2"C. W/BLDG FEEDER PER SINGLE LINE DIAGRAM.
10. COORDINATE ROUTING OF CONDUIT ALONG UNDERSIDE OF BRIDGE –TRANSITION TO RMC PRIOR TO PENETRATING THE ABATEMENT ON EITHER END.
11. (N) N36 POWER PULLBOX PER DETAIL 5/E4.1.
12. (N) 3–2"C. PATHWAYS FROM PULLBOX INTO BLDG. PANEL.
13. (N) GFCI RECEPTACLE COORDINATE ROUTING WITHIN SHADE. STRUCTURE COLUMN.
14. (N) IRRIGATION CONTROLLER LOCATION –COORD & ROUTE (N) CKT FROM PNL. "R".
15. (N) 3" C. W/PEDESTAL "P" FEEDER PER SINGLE LINE DIAGRAM.
16. TRANSITION TO RMC AT BRIDGE WERE EXPOSED.

PEZZONI ENGINEERING, INC.
CONSULTING ELECTRICAL ENGINEERS
1150 9TH Street Suite #1415 Modesto, CA 95354
PHONE: 209 . 554 . 4602
HTTP://WWW.PEZENGR.COM

PEZZONI ENGINEERING, INC. © Copyrighted 2026

Westwood
Westwood Professional Services, Inc.
6200 STONERIDGE MALL ROAD, SUITE 330
PLEASANTON, CA 94588
T: 925.223.8340
westwoodps.com

NO.	DESCRIPTION	DATE	BY	APP. DATE	APP.

NHRPD SIERRA CREEK PARK

7781 WATT AVE, ANTELOPE
PARTIAL SITE PLAN ELECTRICAL

DATE: 08/14/2025
DRAFTER: CCM
DESIGNER: KLP
CHECKED: KLP
PROJECT NO.

REGISTERED PROFESSIONAL ENGINEER
KEVIN L. PEZZONI
NO. 16267
EXP. 12/26
ELECTRICAL
STATE OF CALIFORNIA

E1.1

Know what's below. Call before you dig.

08/10/26 12:39:09 PM F:\22\860 ANTELOPE SIERRA CREEK PARK\ENGR\SHEETS\860_E1.0 SITE PLAN – ELECTRICAL.DWG cmendez

08/10/26 12:39:08 PM F:\22\860 ANTELOPE SIERRA CREEK PARK\ENGR\SHEETS\860_E1.0 SITE PLAN – ELECTRICAL.DWG cmendez

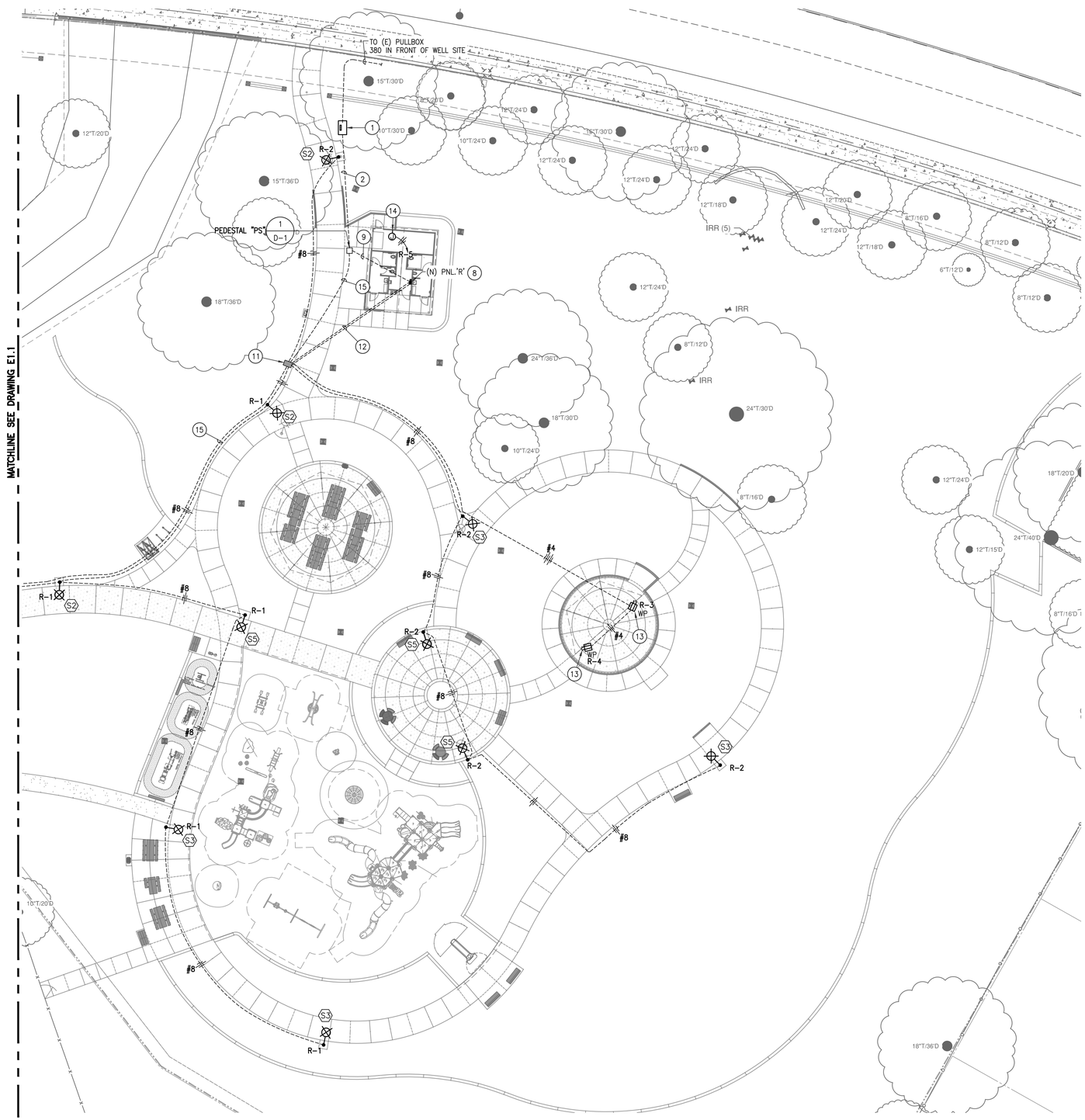

1 PARTIAL SITE PLAN ELECTRICAL

SCALE: 1"=20'-0"

SCALE IN FEET

0 10 20 40

PEZZONI ENGINEERING, INC.
CONSULTING ELECTRICAL ENGINEERS
1150 9TH Street Suite #1415 Modesto, CA 95354
PHONE: 209 . 554 . 4602
HTTP://WWW.PEZENGR.COM

PEZZONI ENGINEERING, INC. © Copyrighted 2026

(##) PLAN NOTES:

1. (N) SMUD XFMER PAD W/BOLLARD PROTECTION PER SMUD REQMTS. –INSTALL (N) 4" C. PRIMARY PER SMUD DRAWINGS.
2. (N) 3" C. W/FEEDER PER SMUD REQMTS. FOR SECONDARY FEEDER.
3. (N) 1–3" & 5–2" C. PATHWAYS FROM PULLBOX INTO PEDESTAL.
4. (N) N36 POWER PULLBOX PER DETAIL 5/E4.1.
5. (N) GFCI RECEPTACLE COORDINATE EXACT LOCATION W/CITY –INSTALL W/1" RMC RISER INTO A FD BOX.
6. (N) 2" C.O. FOR (F) EV CHARGER –ROUTE TO (N) N36 PULLBOX (NOTE #4) –INSTALL CONDUIT STUB PER DETAIL 4/E4.1.
7. (N) DUAL 7.2KW –208V –1PH EV PEDESTAL CHARGER SEE DETAIL 3/E3.1 –INSTALL (N) 2" C. W/4 #6 THWN CU & #10 CU GND VIA PULLBOX (NOTE #4).
8. CONNECT (N) BLDG PANEL (100A –120/240V –1PH –3W) FURNISHED BY MFR. –INSTALL (5X) (N) 20A–1P BREAKERS WITHIN (E) SPACES –LABEL AS "LTG PATHWAYS NORTH ", "LTG PATHWAYS PLAZA ", "LTG PATHWAYS SOUTH ", "RECP AMP "& "RECP AMP".
9. (N) 2" C. W/BLDG FEEDER PER SINGLE LINE DIAGRAM.
10. COORDINATE ROUTING OF CONDUIT ALONG UNDERSIDE OF BRIDGE –TRANSITION TO RMC PRIOR TO PENETRATING THE ABATEMENT ON EITHER END.
11. (N) N36 POWER PULLBOX PER DETAIL 5/E4.1.
12. (N) 3–2" C. PATHWAYS FROM PULLBOX INTO BLDG. PANEL.
13. (N) GFCI RECEPTACLE COORDINATE ROUTING WITHIN SHADE. STRUCTURE COLUMN.
14. (N) IRRIGATION CONTROLLER LOCATION –COORD & ROUTE (N) CKT FROM PNL. "R".
15. (N) 3" C. W/PEDESTAL "P" FEEDER PER SINGLE LINE DIAGRAM.
16. TRANSITION TO RMC AT BRIDGE WERE EXPOSED.

Know what's **below.**
Call before you dig.

Westwood
Westwood Professional Services, Inc.
6200 STONERIDGE MALL ROAD, SUITE 330
PLEASANTON, CA 94588
T: 925.223.8340
westwoodps.com

NO.	DESCRIPTION	DATE	BY	APP. DATE	APP.

NHRPD SIERRA CREEK PARK

7781 WATT AVE, ANTELOPE
PARTIAL SITE PLAN ELECTRICAL

DATE: 08/14/2025
DRAFTER: CCM
DESIGNER: KLP
CHECKED: KLP
PROJECT NO.

REGISTERED PROFESSIONAL ENGINEER
KEVIN L. PEZZONI
NO. 16267
EXP: 12/26
ELECTRICAL
STATE OF CALIFORNIA

E1.2

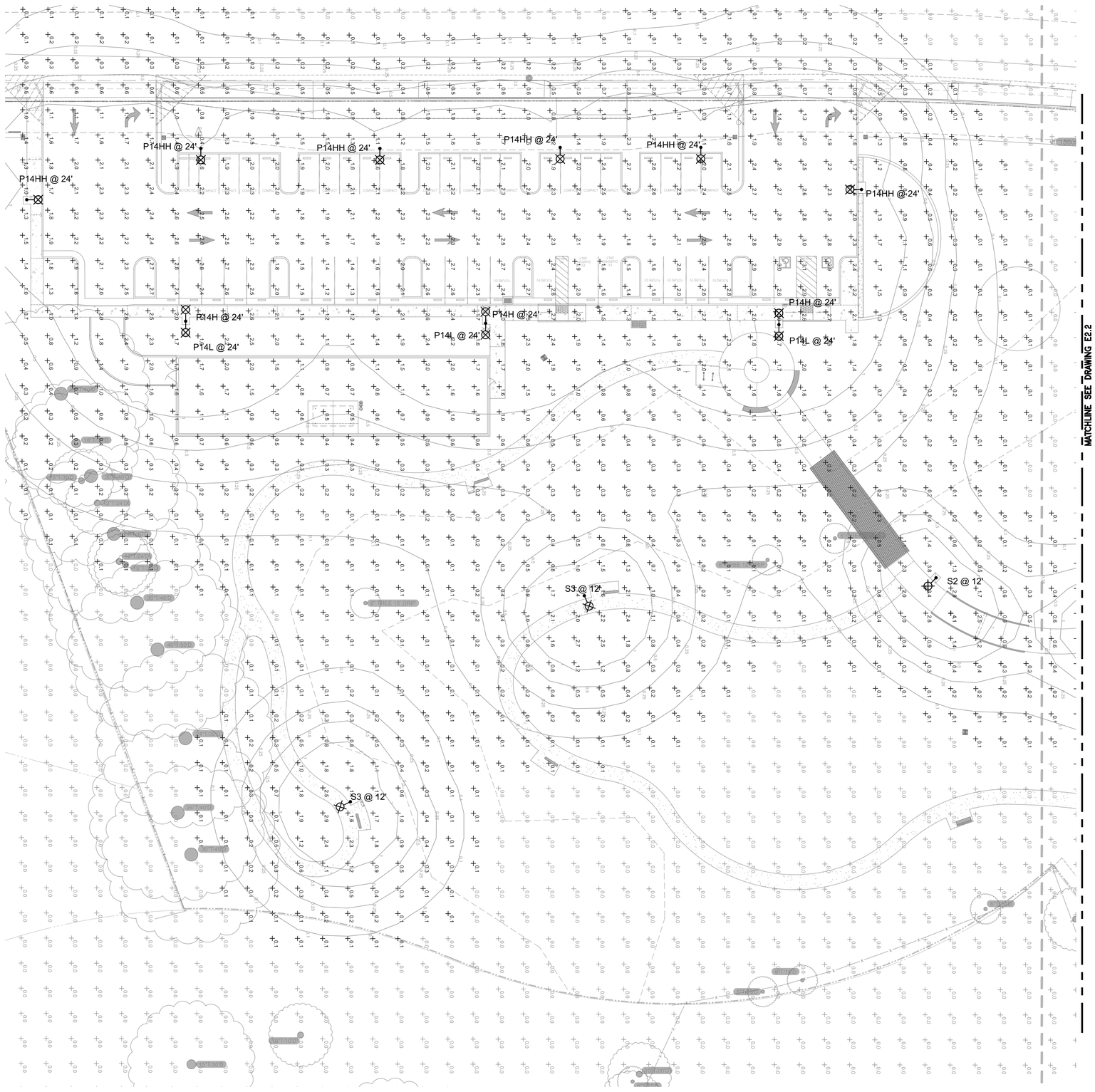

1 PARTIAL SITE PLAN PHOTOMETRICS

SCALE: 1"=20'-0"

SCALE IN FEET

0 10 20 40

PEZZONI ENGINEERING, INC.
CONSULTING ELECTRICAL ENGINEERS
1150 9TH Street Suite #1415 Modesto, CA 95354
PHONE: 209 . 554 . 4602
HTTP://WWW.PEZENGR.COM

PEZZONI ENGINEERING, INC. © Copyrighted 2026

Westwood
Westwood Professional Services, Inc.
8200 STONERIDGE MALL ROAD, SUITE 330
PLEASANTON, CA 94588
T: 925.223.8340
westwoodps.com

NO.	DESCRIPTION	DATE	BY	APP. DATE	APP.

NHRPD SIERRA CREEK PARK

7781 WATT AVE, ANTELOPE
PARTIAL SITE PLAN PHOTOMETRICS

DATE: 08/14/2025
DRAFTER: CCM
DESIGNER: KLP
CHECKED: KLP
PROJECT NO.

REGISTERED PROFESSIONAL ENGINEER
KEVIN L. PEZZONI
NO. 16266
EXP: 12/26
ELECTRICAL
STATE OF CALIFORNIA

E2.1

811 Know what's below. Call before you dig.

08/10/26 12:39:36 PM F:\22\860 ANTELOPE SIERRA CREEK PARK\ENGR\SHEETS\860_E2.0 SITE PLAN – PHOTOMETRICS.DWG cmendez

08/10/26 12:39:36 PM F:\22\860 ANTELOPE SIERRA CREEK PARK\ENGR\SHEETS\860_E2.0 SITE PLAN – PHOTOMETRICS.DWG cmendez

PEZZONI ENGINEERING, INC.
CONSULTING ELECTRICAL ENGINEERS
1150 9TH Street Suite #1415 Modesto, CA 95354
PHONE: 209 . 554 . 4602
HTTP://WWW.PEZENGR.COM

PEZZONI ENGINEERING, INC. © Copyrighted 2026

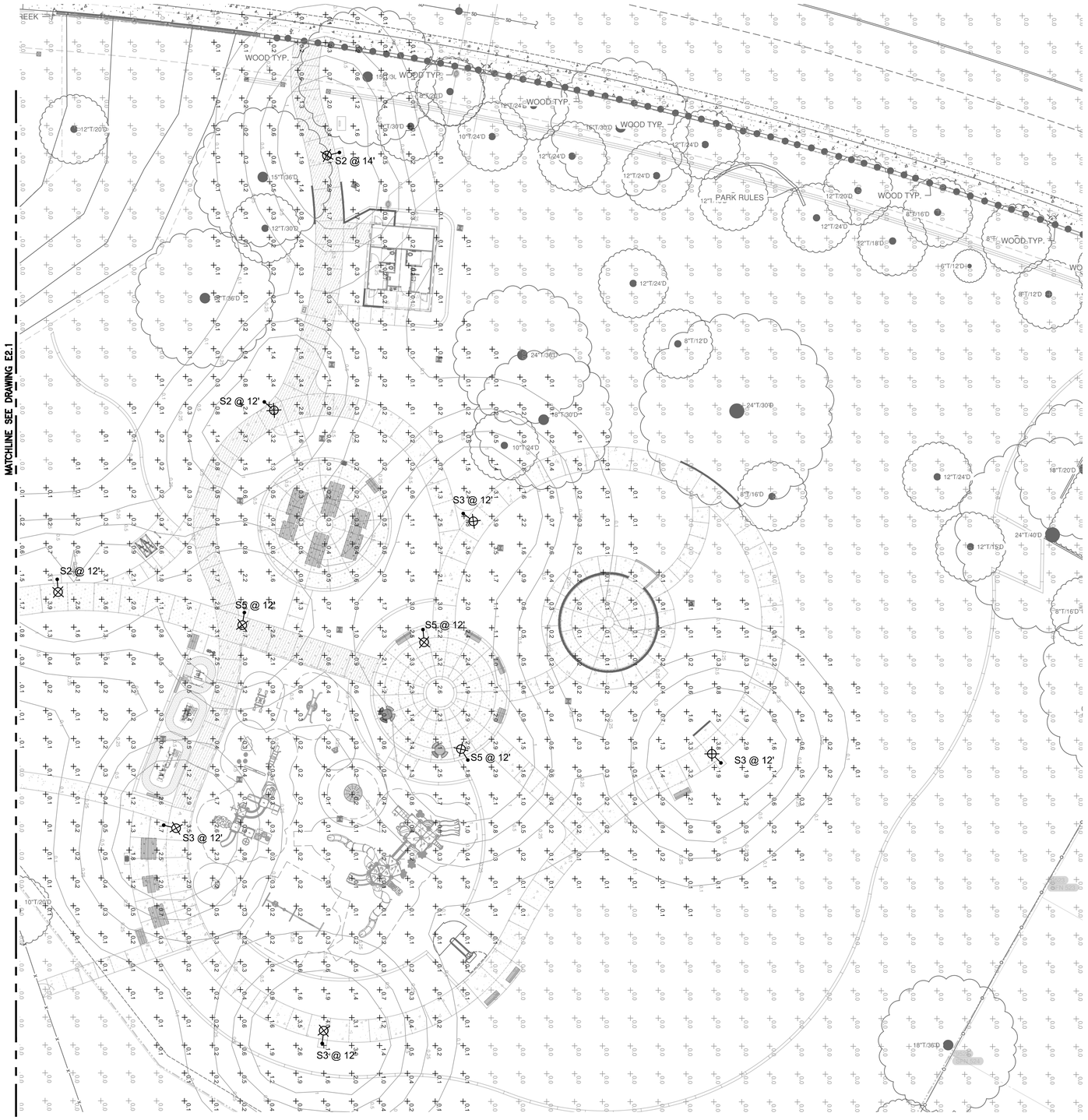

1 PARTIAL SITE PLAN PHOTOMETRICS
SCALE: 1"=20'-0"

SCALE IN FEET
0 10 20 40

Schedule

Label	QTY	Manufacturer	Catalog	Description	Lamp Output	Input Power
P14H	3	GARDCO	P20-C-A05-840-T4S	Pureform Area Small 20" Round, 196 LED's, 4000K CCT, TYPE T4S OPTIC, 80CRI	10256	93
P14L	3	GARDCO	P20-C-A03-840-T4S	Pureform Area Small 20" Round, 196 LED's, 4000K CCT, TYPE T4S OPTIC, 80CRI	5819	50.8914
P14HH	6	GARDCO	P20-C-A05-840-T4S-EHS	Pureform Area Small 20" Round, 196 LED's, 4000K CCT, TYPE T4S-EHS OPTIC, with External House-side Shield, 80CRI	7787	90.199
S2	4	GARDCO	PPT-196L-1150-NW-G2-2-UNV	PPT Pureform Post Top, 196 LED's, 4000K CCT, TYPE 2 OPTIC, Comfort Light Engine, 80CRI	4933	51
S3	6	GARDCO	PPT-196L-1150-NW-G2-3-UNV	PPT Pureform Post Top, 196 LED's, 4000K CCT, TYPE 3 OPTIC, Comfort Light Engine, 80CRI	5657	51

811 Know what's below. Call before you dig.

Westwood
Westwood Professional Services, Inc.
6200 STONERIDGE MALL ROAD, SUITE 330
PLEASANTON, CA 94588
T: 925.223.8340
westwoodps.com

NO.	DESCRIPTION	DATE	BY	APP. DATE	APP.

NHRPD SIERRA CREEK PARK
7781 WATT AVE, ANTELOPE
PARTIAL SITE PLAN PHOTOMETRICS

DATE: 08/14/2025
DRAFTER: CCM
DESIGNER: KLP
CHECKED: KLP
PROJECT NO.

REGISTERED PROFESSIONAL ENGINEER KEVIN L. PEZZONI NO. 16268 EXP. 12/26 ELECTRICAL STATE OF CALIFORNIA

E2.2

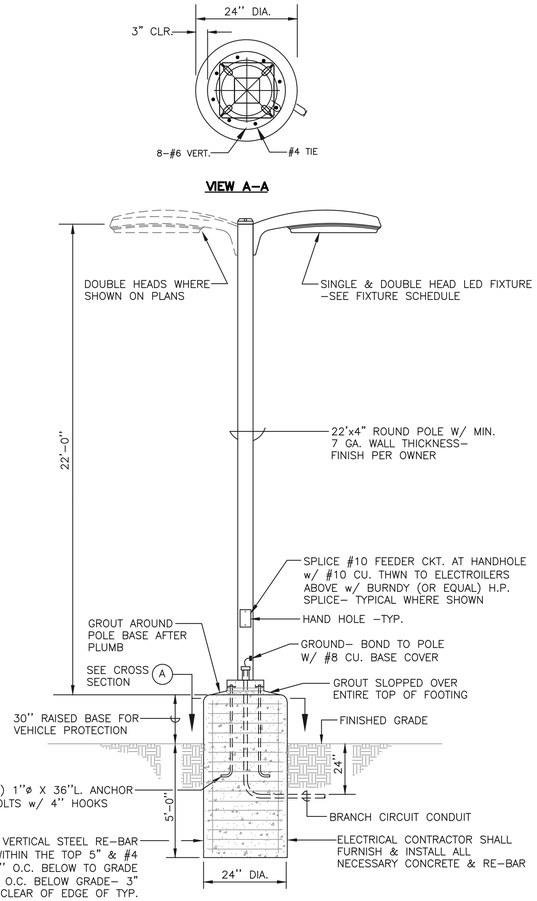

1 (N) LIGHT STANDARD FIXTURE TYPE "P"

SCALE: NTS

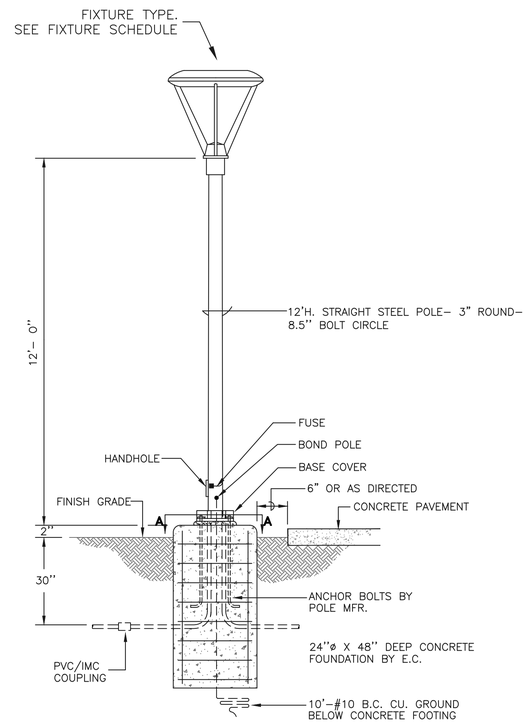

2 (N) LIGHT STANDARD FIXTURE TYPE "S"

SCALE: NTS

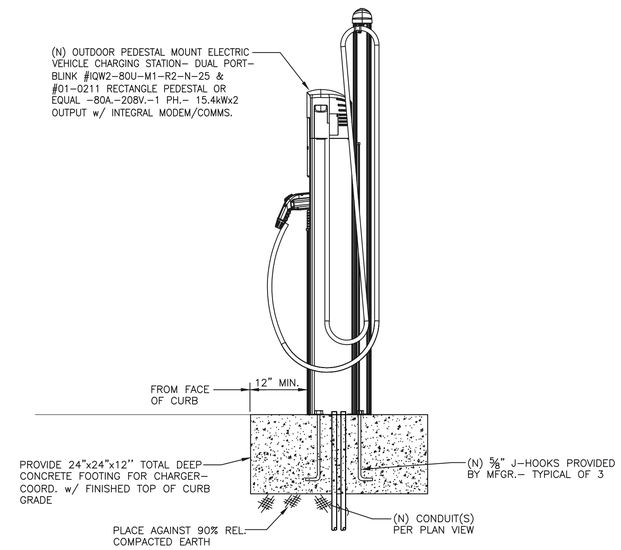

SIDE SECTION

3 ELECTRIC VEHICLE CHARGING STATION

SCALE: NTS

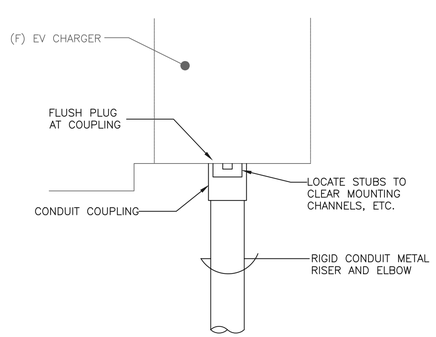

4 STUB AT FUTURE EV CHARGER

SCALE: NTS

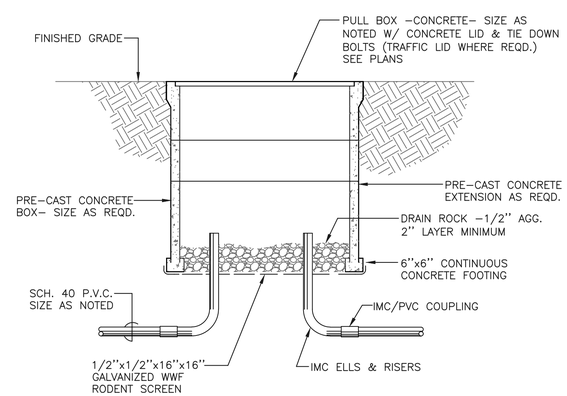

5 PULLBOX (TYP.)

SCALE: NTS

PEZZONI ENGINEERING, INC.
CONSULTING ELECTRICAL ENGINEERS
11150 9TH Street Suite #1415 Modesto, CA 95354
PHONE: 209 . 554 . 4602
HTTP://WWW.PEZENGR.COM

PEZZONI ENGINEERING, INC. © Copyrighted 2026

Westwood
Westwood Professional Services, Inc.
6200 STONERIDGE MALL ROAD, SUITE 330
PLEASANTON, CA 94588
T: 925.223.8340
westwoodps.com

NO.	DESCRIPTION	DATE	BY	APP. DATE	APP.

NHRPD SIERRA CREEK PARK

7781 WATT AVE, ANTELOPE

DETAILS

DATE: 08/14/2025

DRAFTER: CCM

DESIGNER: KLP

CHECKED: KLP

PROJECT NO.

REGISTERED PROFESSIONAL ENGINEER KELVIN L. PEZZONI NO. 16267 EXP. 12/26 ELECTRICAL CALIFORNIA

E3.1

Know what's below. Call before you dig.

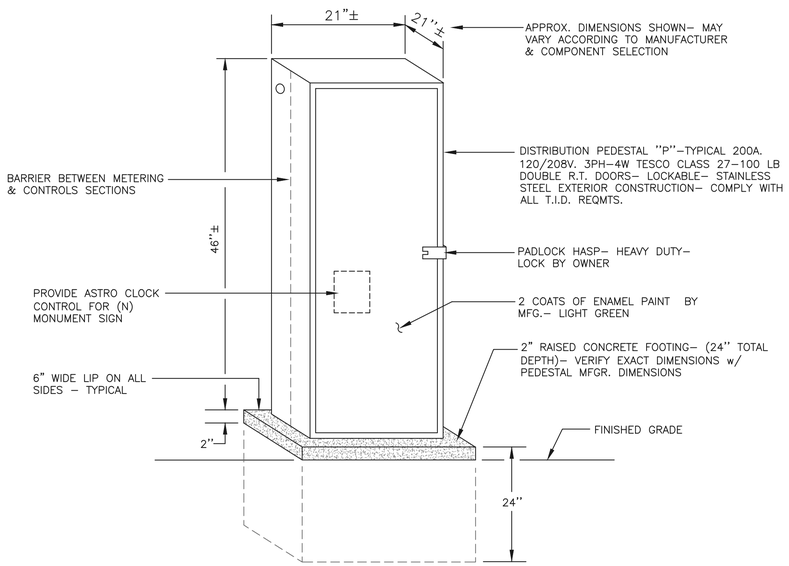

1 (N) SERVICE PEDESTAL

SCALE: NTS

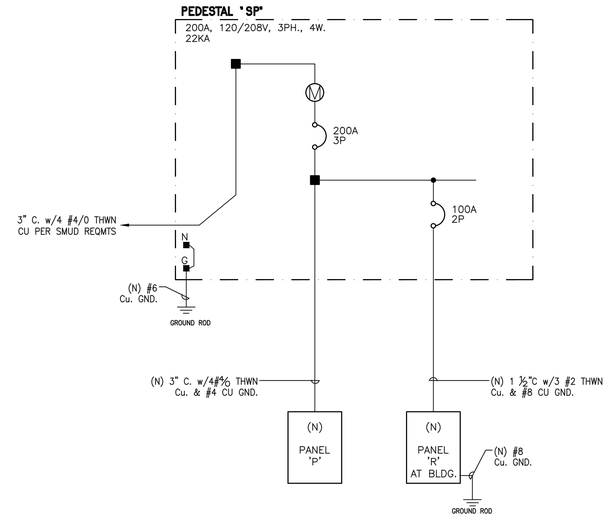

SERVICE PEDESTAL SINGLE LINE DIAGRAM

PEDESTAL SCHEDULE

PANEL: SP — TESCO 27–100 PEDESTAL
BUS RATING: 200 A. **PHASE:** 3ø **SCCR:** 22k
VOLTAGE: 120/208 V. **WIRE:** 4 **BUSSING:** Cu

CKT	DESCRIPTION	BRKR	TYPE	LOAD	A (va)	B (va)	C (va)	LOAD	TYPE	BRKR	DESCRIPTION	CKT
1	EV CHARGER #1	40/2	N	4000	4180			180	R	20/1	PEDESTAL RECP	2
3		/	N	4000		4000			L	20/1	LTG –PARKING LOT	4
5	EV CHARGER #2	40/2	N	4000			4000		L	20/1	LTG –PATHWAY	6
7		/	N	4000	4000							8
9	(F) EV CHARGER #3	40/2	N	4000		4000						10
11		/	N	4000			8000	4000	N	40/2	(F) EV CHARGER #8	12
13	(F) EV CHARGER #4	40/2	N	4000	8000			4000	N	/		14
15		/	N	4000		4180		180	R	20/1	RECP –COMM GARDEN	16
17	(F) EV CHARGER #5	40/2	N	4000			4000			20/1	SPARE	18
19		/	N	4000	4000					20/1	SPARE	20
21	(F) EV CHARGER #6	40/2	N	4000		4000				20/1	SPARE	22
23		/	N	4000			4000			20/1	SPARE	24
25	(F) EV CHARGER #7	40/2	N	4000	4000					20/1	SPARE	26
27		/	N	4000		4000				20/1	SPARE	28
					24180	20180	20000					

CONTINUOUS (C):	0 VA
NON–CONTINUOUS (N):	64000 VA
RECEP. (R):	360 VA
MOTOR (M) OR (M1):	0 VA
LIGHTING (L):	0 VA
KITCHEN >1750W (K):	0 VA

MCB: YES
MLO: –

MAX. PHASE @125% =	251.9 A.
DEMAND TOTAL =	64.4 kVA
=	178.6 A.

DEMAND CALC. PER ART 220

PEZZONI ENGINEERING, INC.
CONSULTING ELECTRICAL ENGINEERS
1150 9TH Street Suite #1415 Modesto, CA 95354
PHONE: 209 . 554 . 4602
HTTP://WWW.PEZENGR.COM

PEZZONI ENGINEERING, INC. © Copyrighted 2026

Westwood
Westwood Professional Services, Inc.
6200 STONERIDGE MALL ROAD, SUITE 330
PLEASANTON, CA 94588
T: 925.223.8340
westwoodps.com

NO.	DESCRIPTION	DATE	BY	APP. DATE	APP.

NHRPD SIERRA CREEK PARK

7781 WATT AVE, ANTELOPE

PEDESTAL DETAIL, PANEL SCHEDULE AND SINGLE LINE DIA.

DATE: 08/14/2025
DRAFTER: CCM
DESIGNER: KLP
CHECKED: KLP
PROJECT NO.

REGISTERED PROFESSIONAL ENGINEER KEVIN L. PEZZONI NO. 16267 EXP. 12/26 ELECTRICAL STATE OF CALIFORNIA

E3.2

Know what's below. Call before you dig.

08/10/26 12:39:52 PM F:\22\860 ANTELOPE SIERRA CREEK PARK\ENGR\SHEETS\860_E3.1 DETAILS.DWG cmendez

poligon®

A Division of PORTERCORP 4240 N. 136th AVE HOLLAND, MI 49424 (616) 888-3500

PROJECT NAME: SIERRA CREEK PARK

PROJECT LOCATION: ANTELOPE, CA

BUILDING TYPE: HHA 32

ROOF TYPE: MULTI-RIB

BUILDING NUMBER: P21520

ORDER NUMBER: 82394

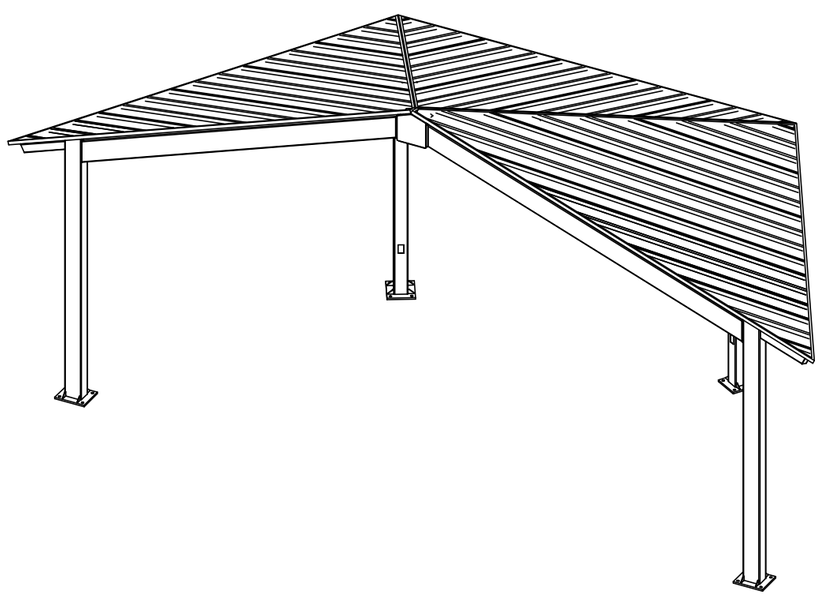

DRAWING LIST:

SHEET NUMBER	DRAWING DESCRIPTION
CS	COVER SHEET
1	ARCHITECTURAL ELEVATIONS
2-2.1	ANCHOR AND FOOTING LAYOUT / DETAILS
3	STRUCTURAL FRAMING PLAN
4-4.1	FRAME CONNECTION DETAILS
5	ELECTRICAL VIEWS
6-6.3	ROOF LAYOUT
7-7.2	ROOF CONNECTION DETAILS

MANUFACTURER NOTES:

MATERIALS:

DESCRIPTION	ASTM DESIGNATION
TUBE STEEL	A500 (GRADE C)
SCHEDULE PIPE	A53 (GRADE B)
RMT PIPE	A519
LIGHT GAGE COLD FORMED	A1003 (GRADE 50)
STRUCTURAL STEEL PLATE	A36
ROOF PANELS (STEEL)	A653
ANCHOR BOLTS	SEE SHEET 2.1

GENERAL NOTES:

1. PORTER CORP IS RESPONSIBLE ONLY FOR THE STRUCTURAL DESIGN OF THE STEEL STRUCTURE (AND FOUNDATION DESIGN IF APPLICABLE) IT SELLS TO THE BUILDER. PORTER CORP OR THEIR ENGINEER IS NOT THE DESIGN PROFESSIONAL OR ENGINEER OF RECORD FOR THE CONSTRUCTION PROJECT. PORTER CORP IS NOT RESPONSIBLE FOR THE DESIGN OF ANY COMPONENTS OR MATERIALS NOT SOLD BY IT OR THEIR INTERFACE AND CONNECTION WITH THE STEEL STRUCTURE.
2. UNLESS NOTED OTHERWISE, THIS STRUCTURE WAS DESIGNED TO ONLY SUPPORT WHAT IS SHOWN ON THESE DRAWINGS. POLIGON MUST BE CONTACTED IF ANYTHING ELSE IS TO BE ATTACHED TO THIS STRUCTURE (WALLS, COLUMN WRAPS, RAILINGS, ETC.) SO THE DESIGN OF THIS STRUCTURE CAN BE REVIEWED AND POSSIBLY REVISED.
3. THE ENGINEERING SEAL FOR THE STRUCTURE DETAILED IN THESE DRAWINGS IS ONLY VALID IF PORTER CORP DESIGNS AND FABRICATES THE STEEL COMPONENTS. FABRICATING THE STEEL COMPONENTS ELSEWHERE VOIDS THE ENGINEERING PROVIDED BY PORTER CORP.
4. UNLESS NOTED OTHERWISE, THIS STRUCTURE WAS DESIGNED ASSUMING A 20' SEPARATION BETWEEN ANY ADJACENT STRUCTURE WITH AN EAVE HEIGHT EQUAL TO OR GREATER THAN THE EAVE HEIGHT OF THIS STRUCTURE (SEE SNOW DESIGN DATA). IF THAT SEPARATION DOES NOT EXIST AND THE GROUND SNOW LOAD (PG) IS GREATER THAN 0 PSF, POLIGON MUST BE CONTACTED SO THE DESIGN OF THIS STRUCTURE CAN BE REVIEWED AND POSSIBLY REVISED.
5. STRUCTURAL STEEL SHALL BE DETAILED, FABRICATED, AND ERECTED IN ACCORDANCE WITH THE AMERICAN INSTITUTE OF STEEL CONSTRUCTION (AISC) SPECIFICATION MANUAL REFERENCED IN THE GOVERNING BUILDING CODE.
6. ALL WELDING IS PERFORMED BY AMERICAN WELDING SOCIETY (AWS) CERTIFIED WELDERS AND CONFORMS TO AWS D1.1 OR D1.3 AS REQUIRED.
7. PARTS SHOWN MAY BE UPGRADED DUE TO STANDARDIZED FABRICATION. REFER TO THE SHIPPING BILL OF MATERIALS AND FINAL INSTALLATION INSTRUCTIONS INCLUDED WITH THE STRUCTURE FOR POSSIBLE SUBSTITUTIONS AND IMPROVEMENTS.
8. FOR PROPER FIELD INSTALLATION OF THE BUILDING IT IS RECOMMENDED THAT THE PRIMARY FRAME INSTALLER AND THE ROOF INSTALLER HAVE A MINIMUM FIVE (5) YEARS DOCUMENTED EXPERIENCE INSTALLING THIS TYPE OF PRODUCT.
9. THE DRAWINGS REPRESENT THE FINISHED STRUCTURE. THE CONTRACTOR SHALL SUPERVISE AND DIRECT THE WORK, AND SHALL BE SOLELY RESPONSIBLE FOR CONSTRUCTION MEANS, TECHNIQUES, SEQUENCES AND PROCEDURES, INCLUDING BRACING, SHORING, LAYDOWN AND PROTECTION OF CONSTRUCTION MATERIALS, ETC. TEMPORARY SHORING AND BRACING SHALL BE THE RESPONSIBILITY OF THE CONTRACTOR.
10. FOR PROPER FIELD INSTALLATION OF THE BUILDING IT IS RECOMMENDED THAT ELECTRIC WIRING, IF REQUIRED, BE RUN THROUGH THE STRUCTURAL MEMBERS BEFORE THE BUILDING IS ERECTED.
11. MAKING HOLES, CUTS OR MODIFICATIONS TO THE STRUCTURAL STEEL MEMBERS IS NOT PERMITTED IN THE FIELD WITHOUT SPECIFIC APPROVAL OF POLIGON.

CERTIFICATES:
MIAMI-DADE COUNTY CERTIFICATE OF COMPETENCY NO. 24-0903.04
PCI (POWDER COATING INSTITUTE) 4000 CERTIFIED

FABRICATOR APPROVALS:
CITY OF PHOENIX, AZ APPROVED FABRICATOR #C08-2010
CITY OF LOS ANGELES, CA APPROVED FABRICATOR #FB01596
CITY OF RIVERSIDE, CA APPROVED FABRICATOR #SF_000042
CITY OF HOUSTON, TX APPROVED FABRICATOR #470
CLARK COUNTY, NV APPROVED FABRICATOR #264
STATE OF UTAH APPROVED FABRICATOR 02008-14
AISC APPROVED FABRICATOR C-00024530
AWS CERTIFIED WELDING FABRICATOR #240707F

AMERICAN INSTITUTE OF STEEL CONSTRUCTION AISC FOUNDED 1921

DESIGN CRITERIA:

GENERAL:
2022 CALIFORNIA BUILDING CODE
RISK CATEGORY: II

DEAD LOAD:
ROOF DEAD LOAD: 2 PSF
FRAME DEAD LOAD: SELF WEIGHT

LIVE LOAD:
ROOF LIVE LOAD: 20 PSF

SNOW DESIGN DATA:
GROUND SNOW LOAD (Pg): 0 PSF
FLAT ROOF SNOW LOAD (Pf): 0 PSF
SNOW EXPOSURE FACTOR (Ce): 1.0
SNOW LOAD IMPORTANCE FACTOR (Is): 1.0
THERMAL FACTOR (Ct): 1.2
ROOF SLOPE FACTOR (Cs): 1.0
DRIFT SURCHARGE LOAD (Pd): 0 PSF
WIDTH OF SNOW DRIFT (w): 0 FT
MINIMUM HORIZONTAL SEPARATION DISTANCE (s): 20 FT

WIND DESIGN DATA:
BASIC WIND SPEED (V): 95 MPH
ALLOWABLE STRESS DESIGN WIND SPEED (Vasd): 74 MPH
GUST EFFECT FACTOR (G): 0.85
INTERNAL PRESSURE COEFFICIENT (GCpi): 0
WIND EXPOSURE: C

SEISMIC DESIGN DATA:
STEEL ORDINARY CANTILEVER
COLUMN SYSTEMS
SEISMIC IMPORTANCE FACTOR (Ie): 1.0
SEISMIC DESIGN CATEGORY: D
SEISMIC SITE CLASS: D DEFAULT
SHORT SPECTRAL RESPONSE (Ss): 0.48
1-SEC SPECTRAL RESPONSE (S1): 0.23
DESIGN SHORT SPECTRAL RESPONSE (SDS): 0.45
DESIGN 1-SEC SPECTRAL RESPONSE (SD1): 0.33
SEISMIC RESPONSE COEFFICIENT (Cs): 0.36
RESPONSE MODIFICATION COEFFICIENT (R): 1.25
EQUIVALENT LATERAL FORCE PROCEDURE
SEE CALCULATIONS FOR ADDITIONAL DATA

ADDITIONAL CRITERIA:
NONE

PROFESSIONAL ENGINEER CHRISTOPHER M EVANS C78816 CIVIL STATE OF CALIFORNIA

Digitally signed by Christopher Evans
Date: 2025.04.17 16:02:00-04'00'

IF THESE DRAWINGS ARE SEALED, THE SEAL APPLIES ONLY TO BUILDING COMPONENTS DETAILED WITHIN THESE DRAWINGS AND SUPPLIED BY PORTER CORP AS WELL AS THE FOUNDATION DESIGN, IF APPLICABLE.

poligon® by PORTER CORP
WWW.POLIGON.COM
MAIN: (616) 888-3500
FIELD SUPPORT: (616) 888-3504

PRINT DATE: 4/15/2025
SCALE: 1:64
DRAWN BY: dave.spell
REV LEVEL: A
CREATION DATE: 9/8/2015
ORDER NO: 82394
CAD MODEL: ~P21520

PROJECT: SIERRA CREEK PARK
PROJECT LOCATION: ANTELOPE, CA
DRAWING: COVER SHEET

SHEET
CS

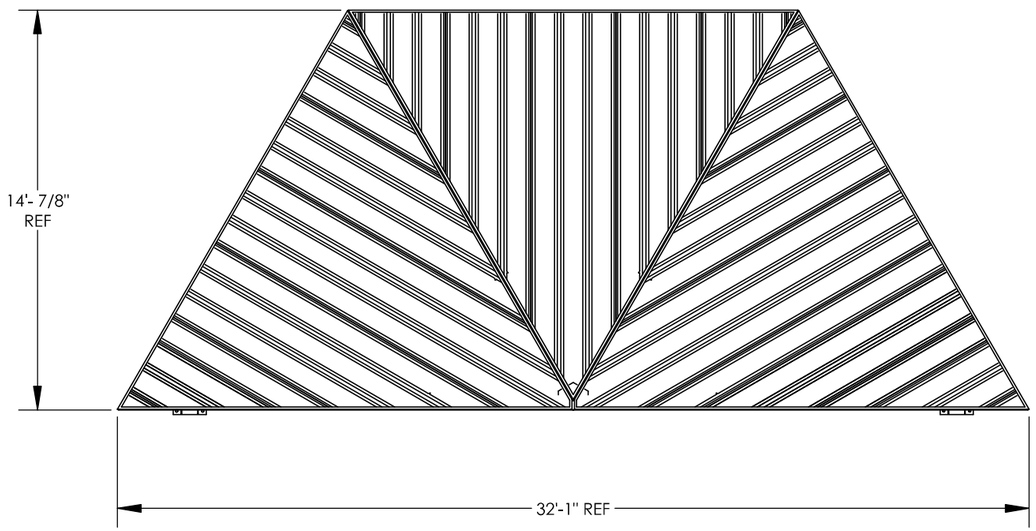

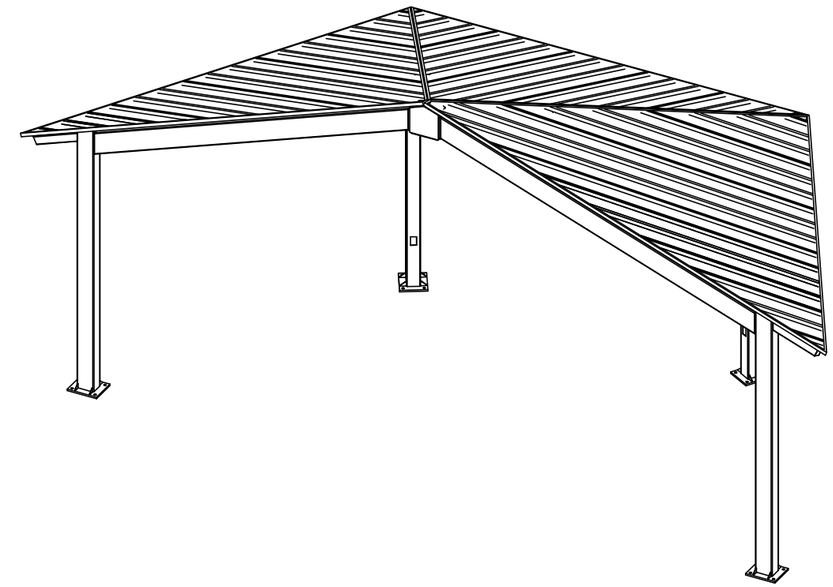

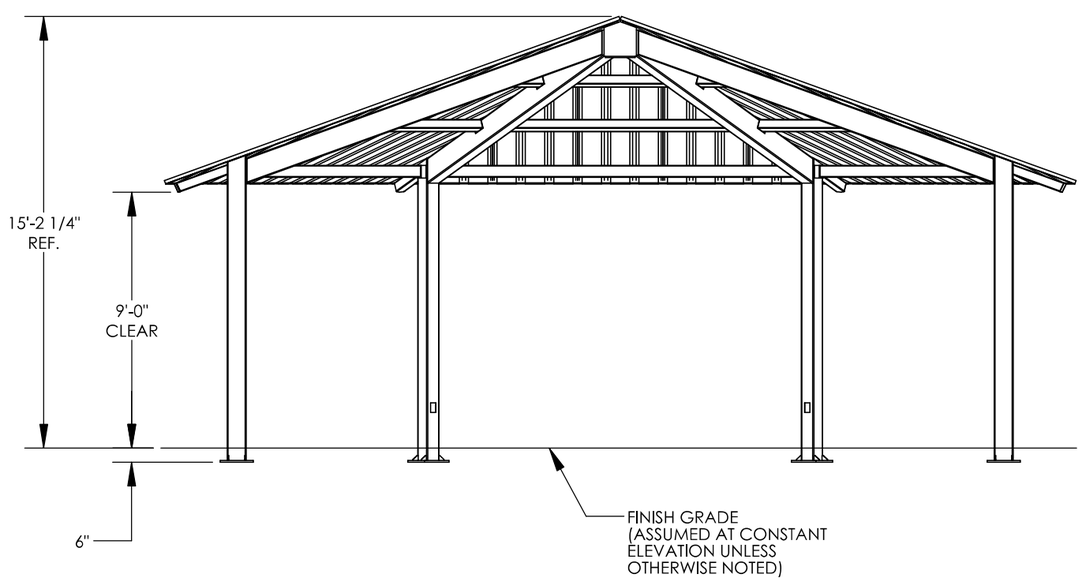

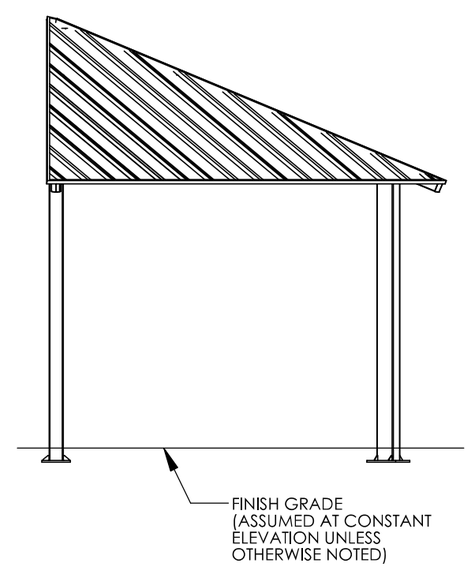

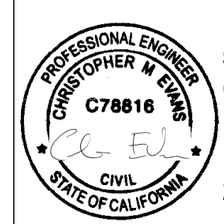

Digitally signed by Christopher Evans
Date: 2025.04.17 16:02:04-04'00'

IF THESE DRAWINGS ARE SEALED, THE SEAL APPLIES ONLY TO BUILDING COMPONENTS DETAILED WITHIN THESE DRAWINGS AND SUPPLIED BY PORTER CORP AS WELL AS THE FOUNDATION DESIGN, IF APPLICABLE.

poligon by PORTER CORP
WWW.POLIGON.COM
MAIN: (616) 888-3500
FIELD SUPPORT: (616) 888-3504

PRINT DATE: 4/15/2025
SCALE: 1:64
DRAWN BY: dave.spell
REV LEVEL: A
CREATION DATE: 9/8/2015
ORDER NO: 82394
CAD MODEL: ~P21520

PROJECT: SIERRA CREEK PARK
PROJECT LOCATION: ANTELOPE, CA
DRAWING: ARCHITECTURAL ELEVATIONS

SHEET
1

ANCHOR AND FOOTING LAYOUT NOTES:

1. ANCHORS MUST BE CENTERED IN FOOTINGS
2. FOOTINGS MUST BE TURNED TO ALIGN WITH COLUMN AND TRUSS CENTERLINE.

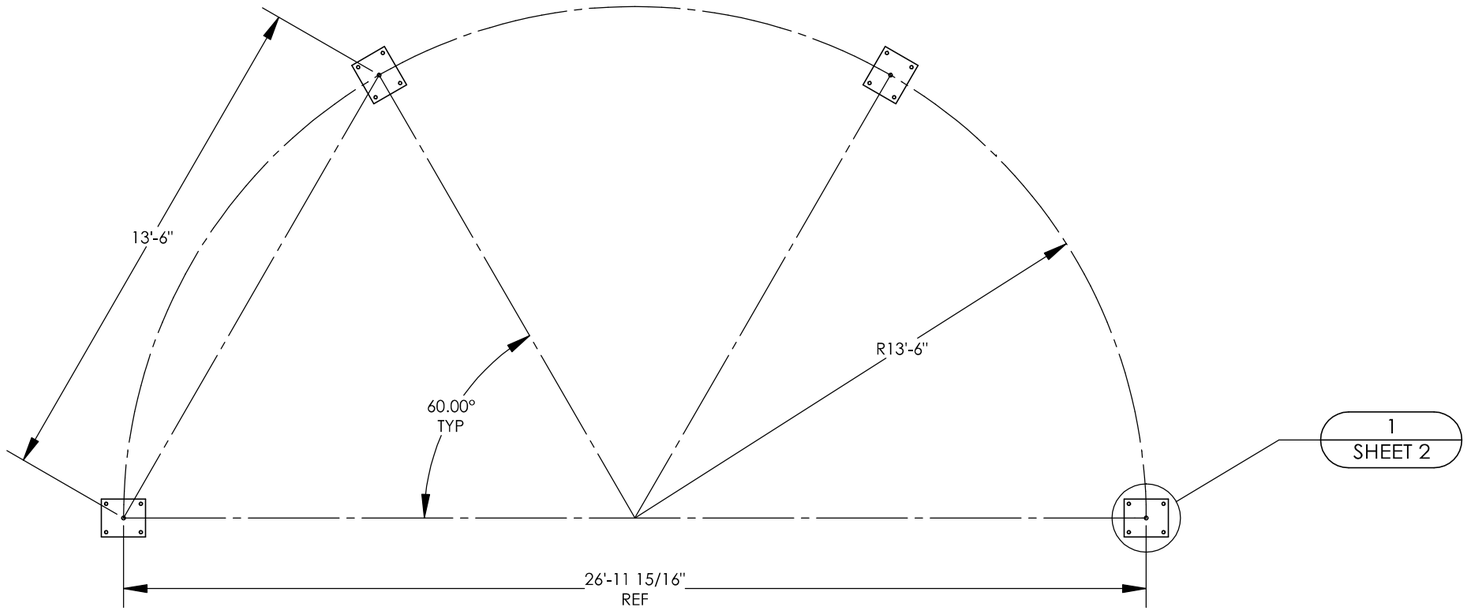

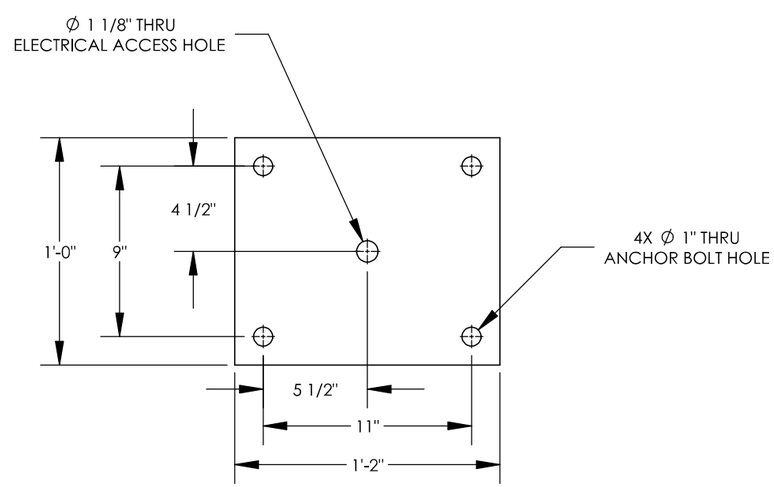

1/2 ANCHOR BOLT PATTERN
BASE PLATE THICKNESS: 1"

PROFESSIONAL ENGINEER
CHRISTOPHER M EVANS
C78816
CIVIL
STATE OF CALIFORNIA

Digitally signed by Christopher Evans
Date: 2025.04.17 16:02:07-04'00'

IF THESE DRAWINGS ARE SEALED, THE SEAL APPLIES ONLY TO BUILDING COMPONENTS DETAILED WITHIN THESE DRAWINGS AND SUPPLIED BY PORTER CORP AS WELL AS THE FOUNDATION DESIGN, IF APPLICABLE.

poligon by PORTER CORP
WWW.POLIGON.COM
MAIN: (616) 888-3500
FIELD SUPPORT: (616) 888-3504

PRINT DATE: 4/15/2025
SCALE: 1:48
DRAWN BY: dave.spell
REV LEVEL: A
CREATION DATE: 9/8/2015
ORDER NO: 82394
CAD MODEL: ~P21520

PROJECT: SIERRA CREEK PARK
PROJECT LOCATION: ANTELOPE, CA
DRAWING: ANCHOR AND FOOTING LAYOUT

SHEET
2

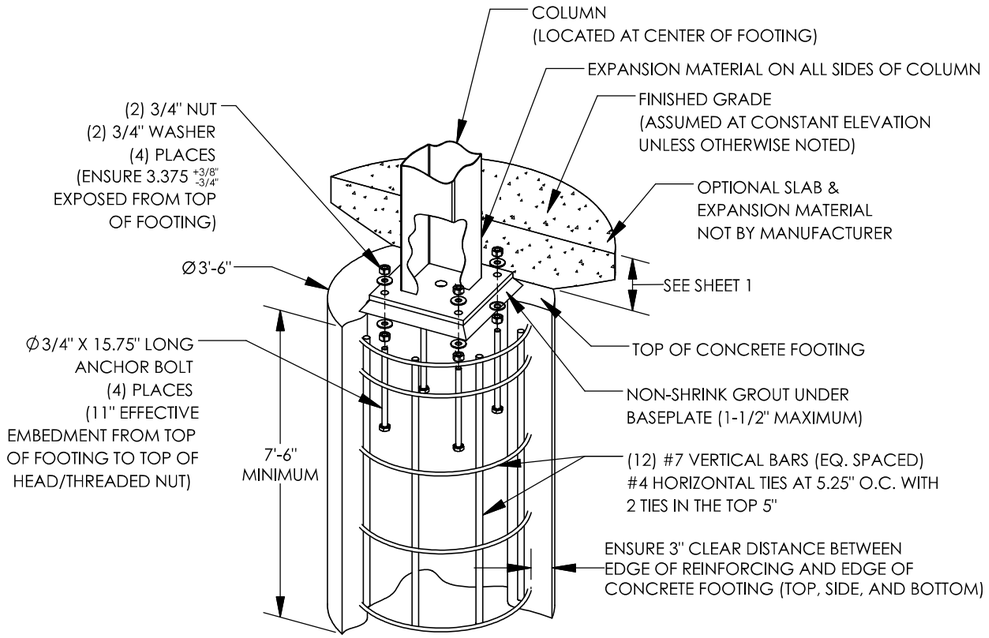

PIER FOOTING OPTION (EXTERNAL ANCHOR BOLTS)

FOOTING DESIGN BY MANUFACTURER, FOOTING MATERIALS BY OTHERS.
(TYPICAL WITH EACH COLUMN, QTY OF REINFORCING AND ANCHOR BOLTS
SPECIFIED IN NOTES REFLECT SITE SPECIFIC REQUIREMENTS)

ANCHOR BOLT NOTES - EXTERNAL (ANCHOR BOLTS LOCATED OUTSIDE COLUMN):

1. ANCHOR RODS TO BE ASTM F1554 GRADE 55 TYPE S1 WITH "UNC" CLASS 2A THREADS, HEAVY HEX NUTS AND STANDARD CUT WASHERS, UNLESS OTHERWISE NOTED.
2. ANCHOR BOLTS SHALL BE EITHER "HEADED" OR "THREADED WITH NUT" AS DEFINED IN THE AMERICAN INSTITUTE OF STEEL CONSTRUCTION MANUAL.
3. HOOKED ANCHOR BOLTS ARE NOT ACCEPTABLE.
4. ACCURATE ANCHOR BOLT PLACEMENT IS CRITICAL. TO ENSURE THE ANCHOR BOLT LAYOUT MEETS THE DIMENSIONS REQUIRED ON THE DRAWINGS, SURVEY (OR MEASURE) THE LOCATION OF ALL ANCHOR BOLTS PRIOR TO POURING THE FOOTINGS. AN ADDITIONAL SURVEY (OR MEASUREMENT) SHOULD BE MADE AFTER THE FOOTINGS ARE POURED TO CONFIRM THE ANCHOR BOLTS DID NOT SHIFT DURING THE CONCRETE POUR.
5. THE MANUFACTURER STRONGLY RECOMMENDS USING ANCHOR BOLT TEMPLATES BECAUSE THEY SIGNIFICANTLY IMPROVE THE ACCURACY OF ANCHOR BOLT PLACEMENT. AN ANCHOR BOLT TEMPLATE IS PROVIDED WITH ANY ANCHOR BOLT KIT PURCHASED.
6. IF OUTSIDE CONSULTING ENGINEERS ARE DESIGNING THE FOUNDATIONS FOR THIS STRUCTURE, THEY MUST REFER TO THE MANUFACTURER'S CALCULATIONS FOR MINIMUM CONCRETE PROPERTIES (COMPRESSIVE STRENGTH, EDGE DISTANCE, ETC.) REQUIRED FOR THE ANCHOR BOLT DESIGN.
7. ELECTRICAL ACCESS HOLE IS ALWAYS LOCATED IN THE COLUMN BASE PLATE AS SHOWN. TEMPLATE MUST BE REMOVED BEFORE INSTALLING COLUMNS.
8. GROUT UNDER BASEPLATES SHALL BE NON-METALLIC, NON-SHRINK GROUT WITH MINIMUM f'c=6500 PSI.
9. THE CALCULATIONS FOR THIS STRUCTURE ASSUME A FIXED COLUMN BASE.
10. ADHESIVE ANCHORS MAY NOT BE SUBSTITUTED FOR THE CAST-IN-PLACE ANCHORS.

CONCRETE NOTES:

1. ALL CONCRETE CONSTRUCTION SHALL CONFORM TO THE CURRENT "ACI MANUAL OF CONCRETE PRACTICE".
2. PORTLAND CEMENT SHALL CONFORM TO ASTM C-150 TYPE II OR TYPE V.
3. IT IS THE CONTRACTOR'S RESPONSIBILITY TO VERIFY THE CONCRETE MIX DESIGN MEETS THE "ACI MANUAL OF CONCRETE PRACTICE" REQUIREMENTS FOR CONCRETE BY EXPOSURE CLASS.
4. THE USE OF CHLORIDE ACCELERATORS IS NOT PERMITTED.
5. COARSE AGGREGATE SHALL BE #57 OR LARGER.
6. CONCRETE AT PLACEMENT SHALL HAVE A SLUMP OF 4" +/- 1".
7. MINIMUM CONCRETE COMPRESSIVE STRENTGH AT 28 DAYS: 4500 PSI.
8. REINFORCING STEEL SHALL BE DEFORMED STEEL CONFORMING TO THE REQUIREMENTS OF ASTM A615 (DEFORMATIONS SHALL BE IN ACCORDANCE WITH ASTM A305) AS FOLLOWS:
   GRADE 60: #4 BARS AND LARGER
   GRADE 40: #3 BARS
9. PRIOR TO PLACING OF CONCRETE, REINFORCING STEEL AND EMBEDDED ITEMS SHALL BE WELL SECURED IN POSITION.
10. MAINTAIN 3" CONCRETE COVERAGE TO FACE OF BARS UNLESS OTHERWISE NOTED.
11. BARS SHALL BE CLEAN OF RUST, GREASE OR OTHER MATERIAL LIKELY TO IMPAIR BOND. BENDS SHALL BE MADE COLD.
12. WELDING OF REINFORCEMENT IS NOT ALLOWED.
13. ALL EXPOSED EXTERNAL CORNER OF FOUNDATIONS TO BE CHAMFERED BY 3/4" BY 45 DEGREES UNLESS NOTED OTHERWISE.
14. ALL NEW CONCRETE SHALL BE CURED IMMEDIATELY AFTER FINISHING OF REMOVING FORMWORK. CURING SHALL BE EITHER A MOIST CURE METHOD OR THE USE OF A CURING COMPOUND.

FOUNDATION NOTES:

1. FOUNDATIONS SHALL BEAR ON COMPETENT, UNDISTURBED SOIL OR 95% COMPACTED FILL. IF SIGNS OF ORGANIC MATERIAL, UNCONTROLLED FILL, CLAY OR SILT, HIGH WATER TABLE OR OTHER POSSIBLE DETRIMENTAL CONDITIONS ARE FOUND, CONSTRUCTION OF THE FOUNDATIONS MUST BE STOPPED AND A GEOTECHNICAL ENGINEER BE CONTACTED.
2. NO FOUNDATIONS SHALL BE PLACED INTO OR ADJACENT TO SUBGRADE CONTAINING WATER, ICE, FROST, ORGANIC OR LOOSE MATERIAL.
3. WATER SHALL NOT BE PERMITTED TO ACCUMULATE IN FOUNDATION EXCAVATIONS.
4. IT IS THE CONTRACTOR'S RESPONSIBILITY TO VERIFY THE LOCAL FROST DEPTH REQUIREMENT PRIOR TO CONSTRUCTION.
5. IF FOUNDATIONS SHOWN DO NOT MEET LOCAL FROST DEPTH REQUIREMENTS, EXTEND THE DRILLED PIER FOUNDATION AS REQUIRED, EXTENDING THE VERTICAL BARS AND PROVIDING ADDITIONAL TIES TO MEET SPACING REQUIREMENTS AS SHOWN. IF FROST DEPTH REQUIREMENTS ARE NOT MET, AND NO DRILLED PIER DESIGN IS PROVIDED, CONTACT POLIGON.
6. ALLOWABLE SOIL PRESSURES (AS APPLICABLE):

DRILLED PIER	
VERTICAL BEARING	1500 PSF
LATERAL BEARING	100 PSF/FT

THE FOUNDATION DESIGN SHOWN ON THESE DRAWINGS IS NOT SITE SPECIFIC, BUT BASED ON THE PRESUMPTIVE ALLOWABLE FOUNDATION PRESSURES IN CHAPTER 18 OF THE BUILDING CODE (CLASS 5 SOIL). THE BUILDING OFFICIAL IN THE JURISDICTION IN WHICH THIS STRUCTURE IS LOCATED MAY REQUIRE A SITE SPECIFIC GEOTECHNICAL REPORT OR LETTER FROM A QUALIFIED LOCAL PROFESSIONAL ENGINEER ATTESTING TO WHETHER THE ACTUAL SITE CONDITIONS MEET THE ASSUMPTIONS IDENTIFIED ABOVE.

Digitally signed by Christopher Evans
Date: 2025.04.17 16:02:56-04'00'

IF THESE DRAWINGS ARE SEALED, THE SEAL APPLIES ONLY TO BUILDING COMPONENTS DETAILED WITHIN THESE DRAWINGS AND SUPPLIED BY PORTER CORP AS WELL AS THE FOUNDATION DESIGN, IF APPLICABLE.

poligon by PORTER CORP
WWW.POLIGON.COM
MAIN: (616) 888-3500
FIELD SUPPORT: (616) 888-3504

PRINT DATE: 4/15/2025
SCALE: 1:6
DRAWN BY: dave.spell
REV LEVEL: A
CREATION DATE: 9/8/2015
ORDER NO: 82394
CAD MODEL: ~P21520

PROJECT: SIERRA CREEK PARK
PROJECT LOCATION: ANTELOPE, CA
DRAWING: ANCHOR AND FOOTING DETAILS

SHEET
2.1

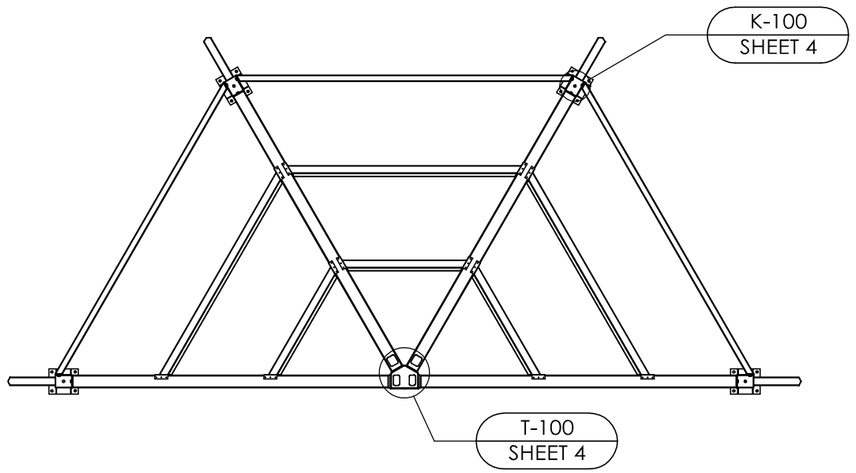

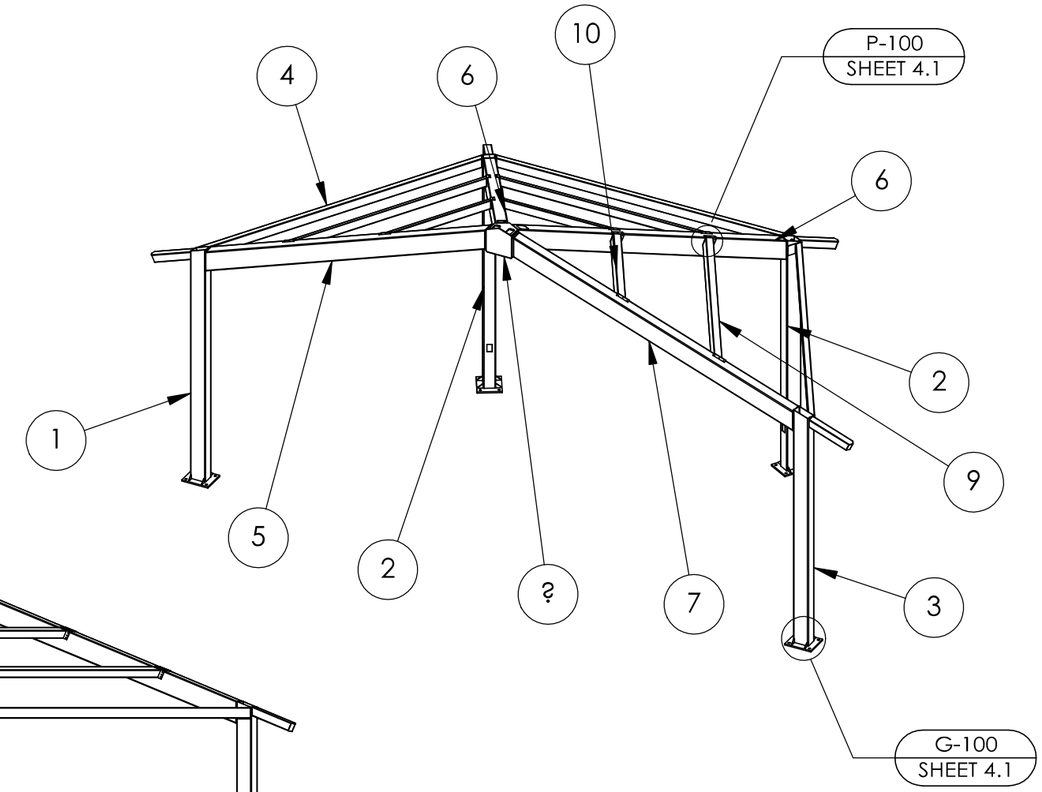

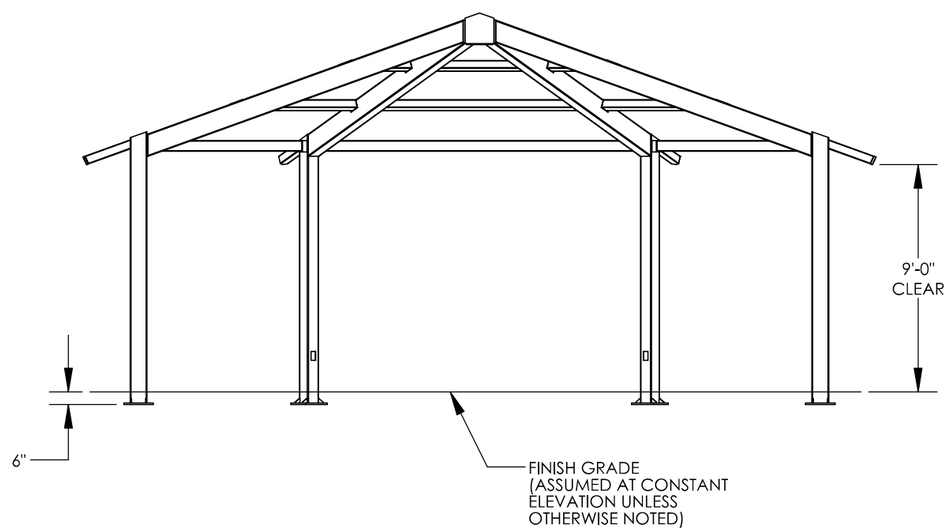

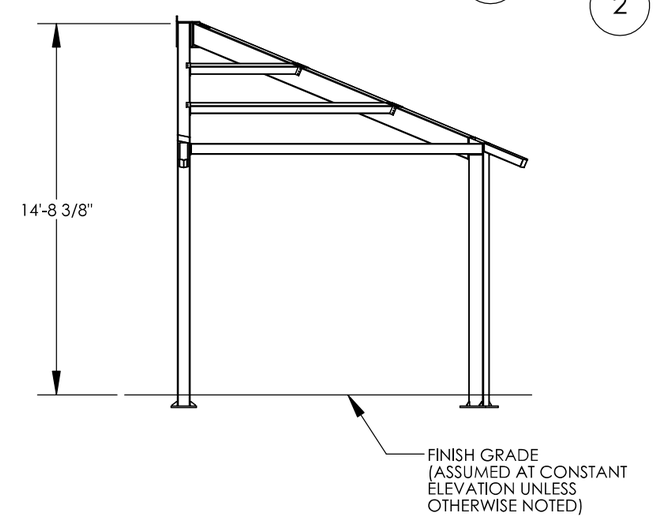

ITEM	QTY.	PART NO.	DESCRIPTION	MATERIAL	WEIGHT
10	3	-	PURLIN 2 ASM	HSS4"X4"X1/8"	33.02
9	3	-	PURLIN 1 ASM	HSS4"X4"X1/8"	60.72
8	1	-	C-RING ASM	3/4" PLATE	124.69
7	1	-	TRUSS 3 ASM	HSS10"X6"X3/16"	282.10
6	2	-	TRUSS 2 ASM	HSS10"X6"X3/16"	271.74
5	1	-	TRUSS 1 ASM	HSS10"X6"X3/16"	282.10
4	3	-	TENSION MEMBER ASM	HSS5"X3"X1/8"	87.87
3	1	-	COLUMN 3 ASM	HSS8"X6"X3/16"	229.80
2	2	-	COLUMN 2 ASM	HSS8"X6"X3/16"	231.17
1	1	-	COLUMN 1 ASM	HSS8"X6"X3/16"	229.80

PROFESSIONAL ENGINEER
CHRISTOPHER M EVANS
C78816
CIVIL
STATE OF CALIFORNIA

Digitally signed by Christopher Evans
Date: 2025.04.17 16:02:11-04'00'

IF THESE DRAWINGS ARE SEALED, THE SEAL APPLIES ONLY TO BUILDING COMPONENTS DETAILED WITHIN THESE DRAWINGS AND SUPPLIED BY PORTER CORP AS WELL AS THE FOUNDATION DESIGN, IF APPLICABLE.

poligon by PORTER CORP
WWW.POLIGON.COM
MAIN: (616) 888-3500
FIELD SUPPORT: (616) 888-3504

PRINT DATE: 4/15/2025
SCALE: 1:72
DRAWN BY: dave.spell
REV LEVEL: A
CREATION DATE: 9/8/2015
ORDER NO: 82394
CAD MODEL: ~P21520

PROJECT: SIERRA CREEK PARK
PROJECT LOCATION: ANTELOPE, CA
DRAWING: STRUCTURAL FRAMING PLAN

SHEET
3

NOTE:
SEE UC-100 FOR U-CLIP INSTALLATION

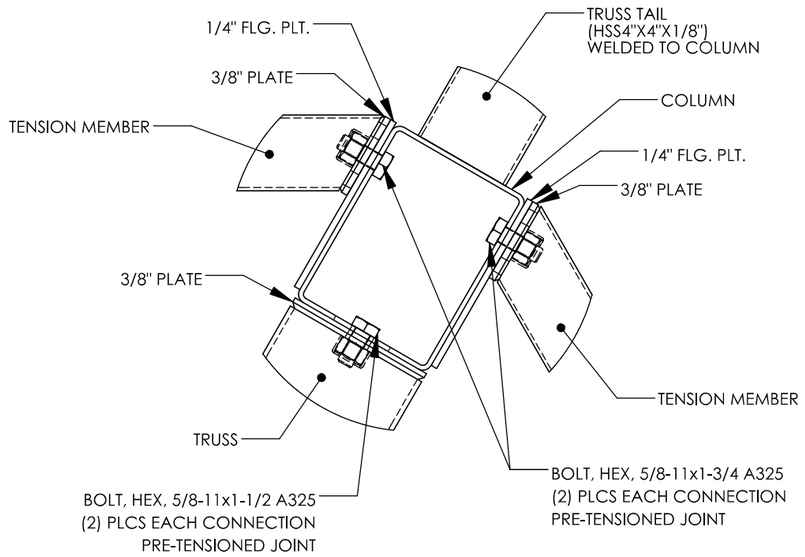

COLUMN CONNECTIONS | K-100

COVER ACCESS HOLES WITH GRACE ICE AND WATER SHIELD BEFORE ATTACHING ROOF DECKING.

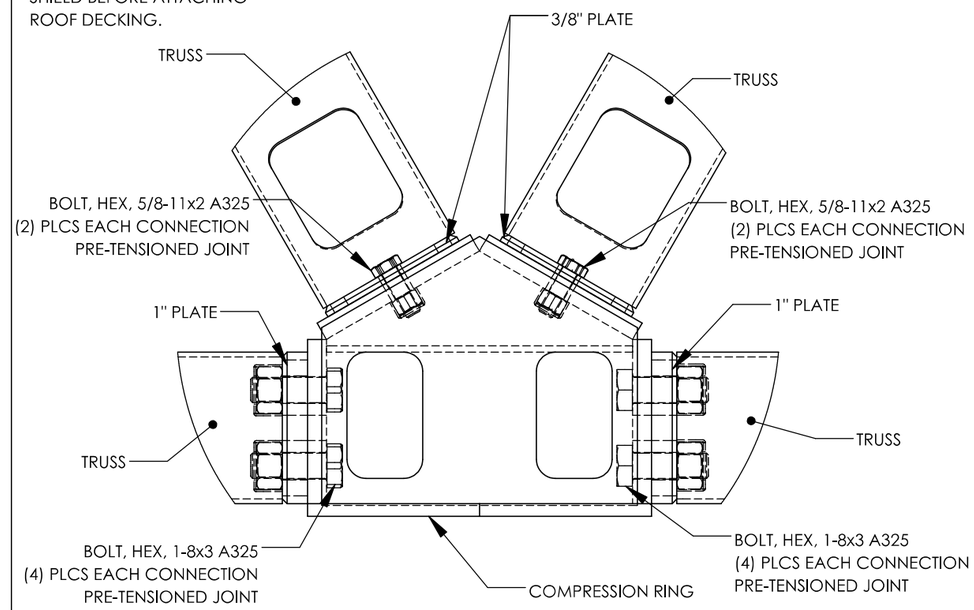

COMPRESSION MEMBER CONNECTION | T-100

TURN-OF-NUT PRETENSIONING METHOD:
THESE STEPS ILLUSTRATE THE REQUIREMENTS OUTLINED IN THE AISC SPECIFICATION. THE ROTATION INDICATED IS ACCURATE FOR MOST BOLT DIAMETERS AND LENGTHS BUT IT IS THE RESPONSIBILITY OF THE INSTALLER TO MEET AISC REQUIREMENTS.

STEP ONE:
AFTER SNUG TIGHT, MATCH MARK PLATE

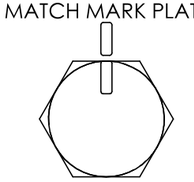

STEP TWO:
THEN TURN BOLT/NUT PAST SNUG TIGHT 1/3 TURN

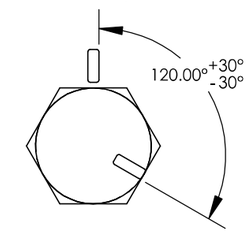

CONNECTION NOTES:

1. HIGH STRENGTH BOLTS SHALL BE ASTM F3125 (A325, TYPE 1) MATERIAL.
2. HIGH STRENGTH NUTS SHALL BE ASTM A563 (GRADE DH) MATERIAL.
3. HIGH STRENGTH WASHERS SHALL CONFORM TO ASTM F436.
4. UNLESS A SNUG-TIGHT JOINT IS PERMITTED IN THE CONNECTION DETAIL, ALL BOLTS ARE TO BE INSTALLED BY ONE OF THE FOLLOWING PRETENSIONING METHODS AS SPECIFIED IN THE AISC "SPECIFICATION FOR STRUCTURAL JOINTS USING HIGH-STRENGTH BOLTS", SECTION 8:
   A. TURN-OF-NUT PRETENSIONING
5. THE SNUG-TIGHT CONDITION IS THE TIGHTNESS THAT IS ATTAINED WITH A FEW IMPACTS OF AN IMPACT WRENCH OR THE FULL EFFORT OF AN IRONWORKER USING AN ORDINARY SPUD WRENCH TO BRING THE CONNECTED PLIES INTO FIRM CONTACT.
6. ANCHOR BOLTS NEED NOT BE TIGHTENED PAST SNUG-TIGHT.
7. WHEN INSTALLING BOLTS REFER TO SECTIONS 8.1 AND 8.2 OF THE "SPECIFICATION FOR STRUCTURAL JOINTS USING HIGH-STRENGTH BOLTS" FOR GUIDANCE.
8. LOCAL JURISDICTIONS MAY REQUIRE AN INSPECTOR TO BE PRESENT TO WITNESS HARDWARE INSTALLATION AND INDEPENDENT TESTING. INSPECTION REQUIREMENTS SHOULD BE VERIFIED BY INSTALLER PRIOR TO STEEL ERECTION.
9. ERECTION OF THE FRAMING MEMBERS WILL REQUIRE THE MAIN COLUMNS TO BE PLUMB SQUARE AND TIGHTENED TO THE TRUSSES AND/OR TENSION MEMBERS BEFORE INSTALLING THE PURLINS. PURLINS, IF REQUIRED, MUST BE AS SHOWN IN FRAMING PLAN.
10. TEMPORARY SHORING OR BRACING SHALL BE USED TO COMPACT THE JOINTS UNTIL THE CONNECTED PLIES ARE IN FIRM CONTACT PRIOR TO PRETENSIONING.
11. PRIOR TO THE ERECTION OF SHELTER COMPONENTS, IT IS RECOMMENDED TO CHASE AND TAP STRUCTURAL HARDWARE.
12. ALL BOLTS MUST BE LUBRICATED WITH WAX TO ASSIST IN PROPER TIGHTENING. TO LUBRICATE A BOLT IN THE FIELD, APPLY THE WAX STICK DOWN THE LENGTH OF THE BOLT'S THREADS.
13. TO PREVENT RUST STAINING OF FINISH, ALL METAL SHAVINGS MUST BE REMOVED AFTER INSTALLATION. ENSURE NO SHAVING ARE TRAPPED BETWEEN MATING SURFACES.
14. TOUCH-UP PAINT MUST BE APPLIED TO ALL EXPOSED FASTENERS. PERIODIC TOUCH-UP AT THESE CONNECTIONS IS REQUIRED.
15. ENSURE FRAME MEMBERS WITH DRAIN HOLES NEAR THE ENDS OF TUBES ARE INSTALLED FACING UP UNLESS SPECIFIED IN THE FRAME CONNECTION DETAILS.

Digitally signed by Christopher Evans
Date: 2025.04.17 16:02:14-04'00'

IF THESE DRAWINGS ARE SEALED, THE SEAL APPLIES ONLY TO BUILDING COMPONENTS DETAILED WITHIN THESE DRAWINGS AND SUPPLIED BY PORTER CORP AS WELL AS THE FOUNDATION DESIGN, IF APPLICABLE.

poligon by PORTER CORP
WWW.POLIGON.COM
MAIN: (616) 888-3500
FIELD SUPPORT: (616) 888-3504

PRINT DATE: 4/15/2025
SCALE: 1:4
DRAWN BY: dave.spell
REV LEVEL: A
CREATION DATE: 9/8/2015
ORDER NO: 82394
CAD MODEL: ~P21520

PROJECT: SIERRA CREEK PARK
PROJECT LOCATION: ANTELOPE, CA
DRAWING: FRAME CONNECTION DETAILS

SHEET
4

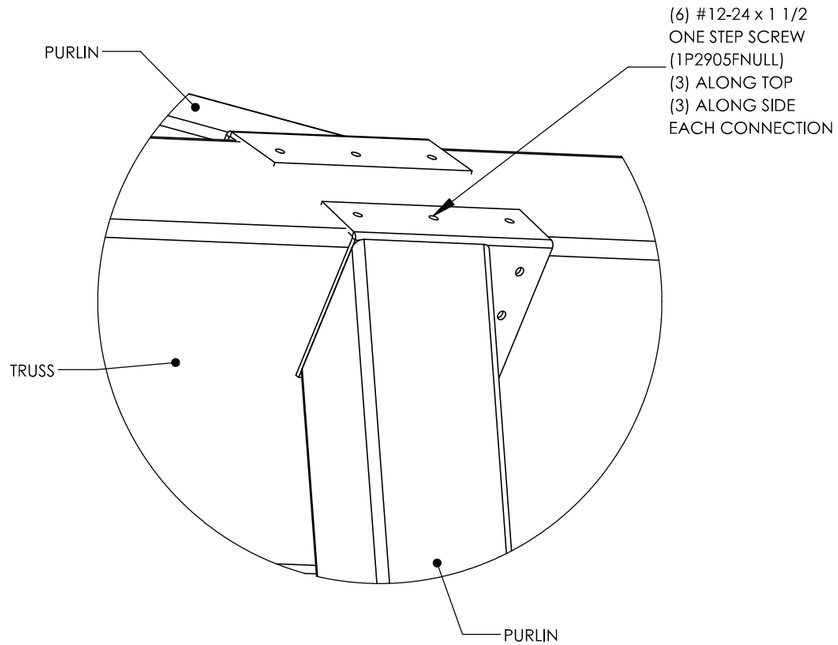

PURLIN CONNECTION | P-100

NOTE:
U-CLIP MUST BE ATTACHED TO TENSION MEMBER AS SHOWN PRIOR TO BUILDING ASSEMBLY.

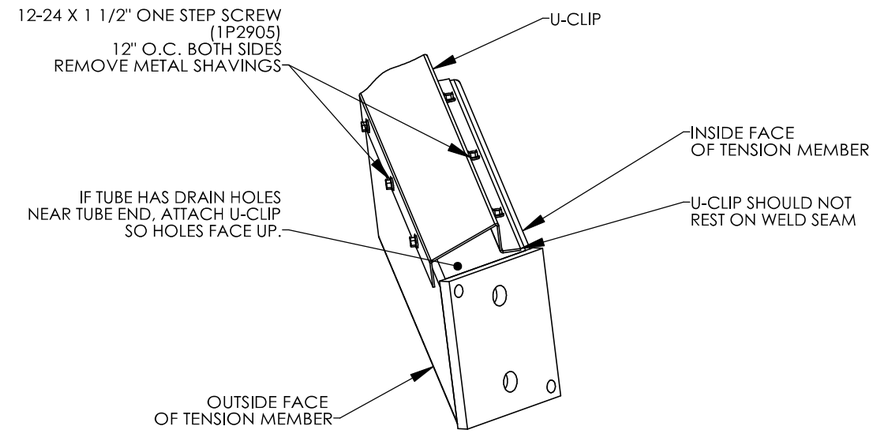

U-CLIP CONNECTION | UC-100

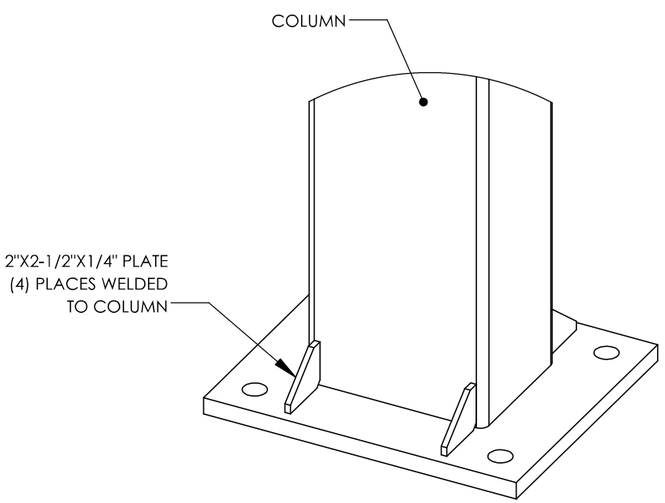

COLUMN GUSSET DETAIL | G-100

PROFESSIONAL ENGINEER
CHRISTOPHER M EVANS
C78816
CIVIL
STATE OF CALIFORNIA

Digitally signed by Christopher Evans
Date: 2025.04.17 16:02:16-04'00'

IF THESE DRAWINGS ARE SEALED, THE SEAL APPLIES ONLY TO BUILDING COMPONENTS DETAILED WITHIN THESE DRAWINGS AND SUPPLIED BY PORTER CORP AS WELL AS THE FOUNDATION DESIGN, IF APPLICABLE.

poligon by PORTER CORP
WWW.POLIGON.COM
MAIN: (616) 888-3500
FIELD SUPPORT: (616) 888-3504

PRINT DATE: 4/15/2025
SCALE: 1:4
DRAWN BY: dave.spell
REV LEVEL: A
CREATION DATE: 9/8/2015
ORDER NO: 82394
CAD MODEL: ~P21520

PROJECT: SIERRA CREEK PARK
PROJECT LOCATION: ANTELOPE, CA
DRAWING: FRAME CONNECTION DETAILS

SHEET
4.1

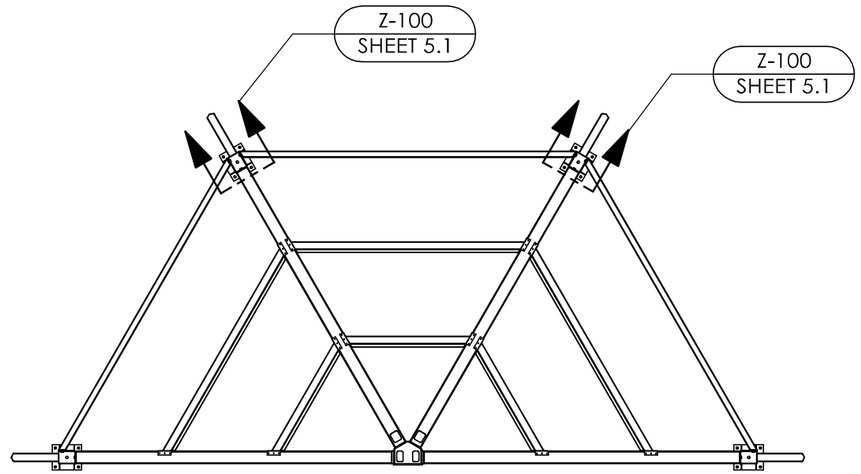

NOTE: COVER PLATES PROVIDED FOR ALL ELECTRICAL CUTOUTS

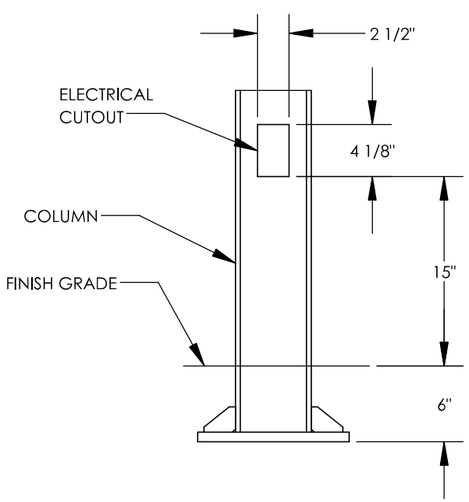

CUSTOMER TO VERIFY CUTOUT SIZE AND LOCATION

ELECTRICAL CUTOUT LOCATION	Z-100

NOTE: POLIGON RECOMMENDS RUNNING ELECTRICAL WIRING PRIOR TO INSTALLING ROOF

PROFESSIONAL ENGINEER
CHRISTOPHER M EVANS
C78816
CIVIL
STATE OF CALIFORNIA

Digitally signed by Christopher Evans
Date: 2025.04.17 16:02:19-04'00'

IF THESE DRAWINGS ARE SEALED, THE SEAL APPLIES ONLY TO BUILDING COMPONENTS DETAILED WITHIN THESE DRAWINGS AND SUPPLIED BY PORTER CORP AS WELL AS THE FOUNDATION DESIGN, IF APPLICABLE.

poligon by PORTER CORP
WWW.POLIGON.COM
MAIN: (616) 888-3500
FIELD SUPPORT: (616) 888-3504

PRINT DATE: 4/15/2025
SCALE: 1:72
DRAWN BY: dave.spell
REV LEVEL: A
CREATION DATE: 9/8/2015
ORDER NO: 82394
CAD MODEL: ~P21520

PROJECT: SIERRA CREEK PARK
PROJECT LOCATION: ANTELOPE, CA
DRAWING: ELECTRICAL VIEWS

SHEET
5

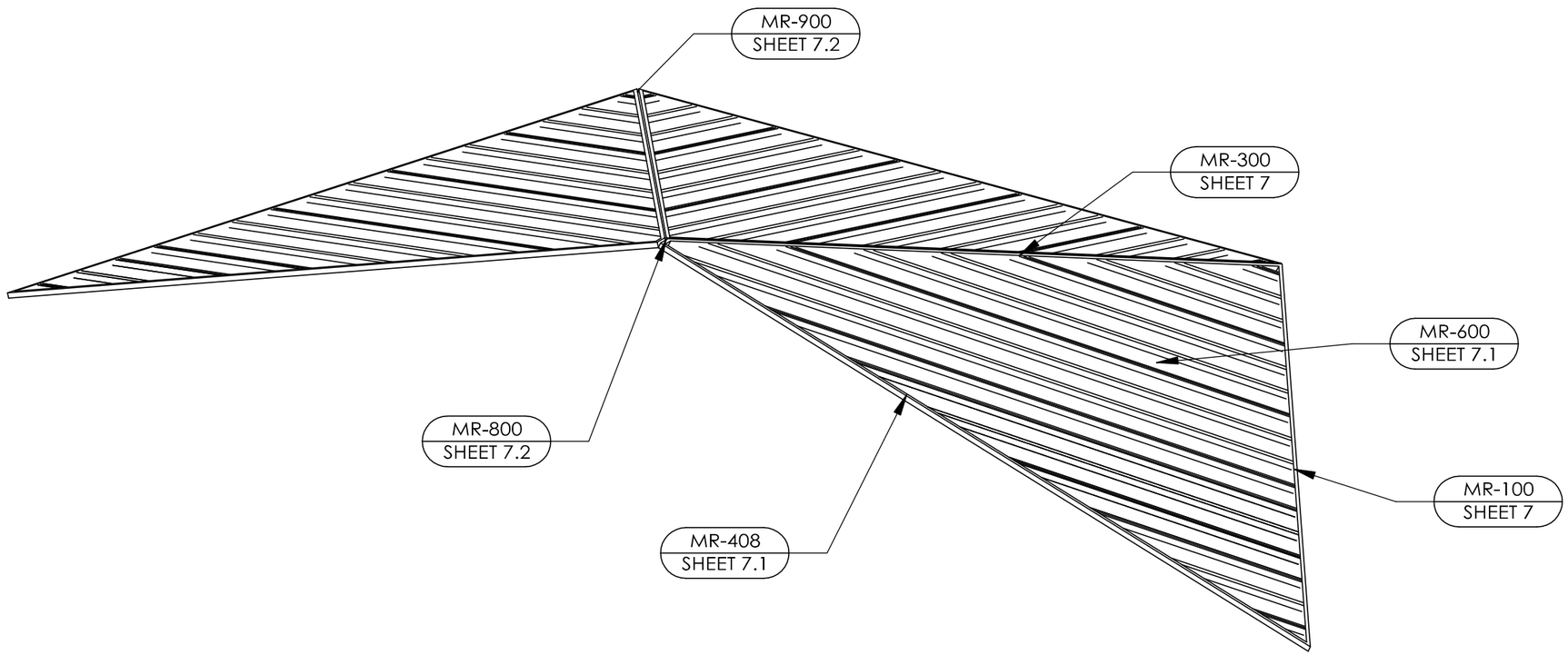

PROFESSIONAL ENGINEER
CHRISTOPHER M EVANS
C78816
CIVIL
STATE OF CALIFORNIA

Digitally signed by Christopher Evans
Date: 2025.04.17 16:02:21-04'00'

IF THESE DRAWINGS ARE SEALED, THE SEAL APPLIES ONLY TO BUILDING COMPONENTS DETAILED WITHIN THESE DRAWINGS AND SUPPLIED BY PORTER CORP AS WELL AS THE FOUNDATION DESIGN, IF APPLICABLE.

poligon by PORTER CORP
WWW.POLIGON.COM
MAIN: (616) 888-3500
FIELD SUPPORT: (616) 888-3504

PRINT DATE: 4/15/2025
SCALE: 1:36
DRAWN BY: dave.spell
REV LEVEL: A
CREATION DATE: 9/8/2015
ORDER NO: 82394
CAD MODEL: ~P21520

PROJECT: SIERRA CREEK PARK
PROJECT LOCATION: ANTELOPE, CA
DRAWING: ROOF OVERVIEW

SHEET
6

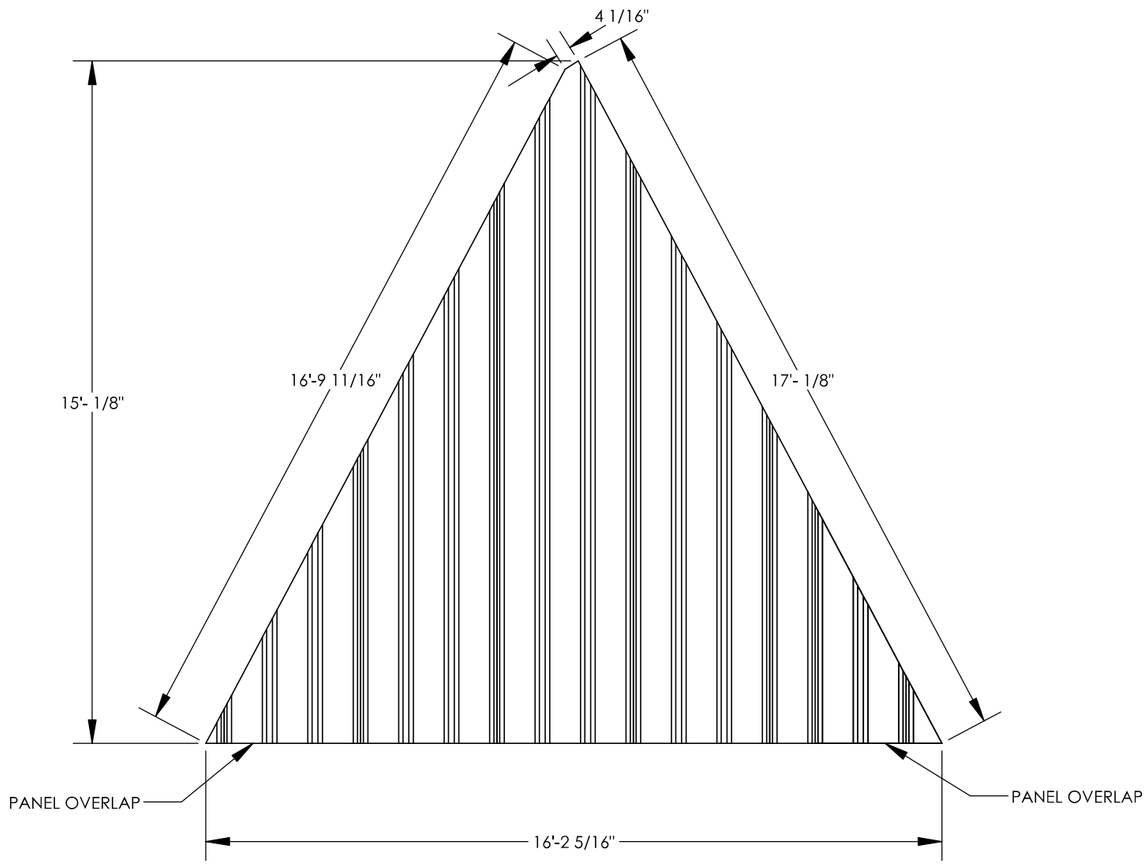

MULTI-RIB NOTES:

1. THE DETAILS SHOWN ARE SUGGESTIONS OR GUIDELINES ON HOW TO ERECT THE SYSTEMS. THE INFORMATION SHOWN IS ACCURATE, BUT IT IS NOT INTENDED TO COVER ALL INSTANCES, BUILDING REQUIREMENTS, DESIGNS OR CODES. THE DETAILS MAY REQUIRE CHANGES OR REVISIONS DUE TO FIELD CONDITIONS.
2. IT SHALL BE THE RESPONSIBILITY OF THE ERECTOR TO ENSURE THAT THE DETAILS MEET PARTICULAR BUILDING REQUIREMENTS AND TO ASSURE ADEQUATE WATER TIGHTNESS.
3. THE ERECTOR SHOULD THOROUGHLY FAMILIARIZE HIMSELF/HERSELF WITH ALL ERECTION INSTRUCTIONS BEFORE STARTING WORK.
4. THE PANELS SHOULD BE INSTALLED PLUMB, STRAIGHT, AND ACCURATELY TO THE ADJACENT WORK.
5. FLASHING AND TRIM SHALL BE INSTALLED TRUE, AND IN PROPER ALIGNMENT, WITH ANY EXPOSED FASTENERS EQUALLY SPACED FOR THE BEST APPEARANCE.
6. SEALANT SHALL BE FIELD APPLIED ON DRY, CLEAN SURFACES. SOME FIELD CUTTING AND FITTING OF PANELS AND FLASHING IS TO BE EXPECTED BY THE ERECTOR AND MINOR FIELD CORRECTIONS ARE A PART OF NORMAL ERECTION WORK.
7. WORKMANSHIP SHALL BE OF THE BEST INDUSTRY STANDARDS AND INSTALLATION SHALL BE PERFORMED BY EXPERIENCED METAL CRAFTSMEN.
8. METAL SHAVINGS FROM DRILLING OR INSTALLATION OF ROOF FASTENERS MUST BE CAREFULLY REMOVED FROM THE ROOF BY BRUSHING OR SWEEPING AT THE END OF EACH DAY DURING INSTALLATION. SHAVINGS LEFT ON THE ROOF WILL QUICKLY RUST AND STAIN THE ROOF FINISH.

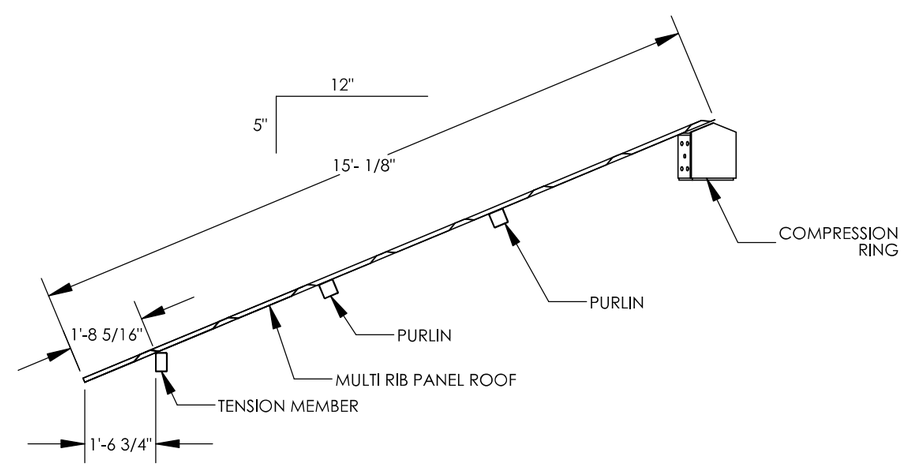

PROFESSIONAL ENGINEER
CHRISTOPHER M EVANS
C78816
CIVIL
STATE OF CALIFORNIA

Digitally signed by Christopher Evans
Date: 2025.04.17 16:02:24-04'00'

IF THESE DRAWINGS ARE SEALED, THE SEAL APPLIES ONLY TO BUILDING COMPONENTS DETAILED WITHIN THESE DRAWINGS AND SUPPLIED BY PORTER CORP AS WELL AS THE FOUNDATION DESIGN, IF APPLICABLE.

poligon by PORTER CORP
WWW.POLIGON.COM
MAIN: (616) 888-3500
FIELD SUPPORT: (616) 888-3504

PRINT DATE: 4/15/2025
SCALE: 1:40
DRAWN BY: dave.spell
REV LEVEL: A
CREATION DATE: 9/8/2015
ORDER NO: 82394
CAD MODEL: ~P21520

PROJECT: SIERRA CREEK PARK
PROJECT LOCATION: ANTELOPE, CA
DRAWING: ROOF LAYOUT

SHEET
6.1

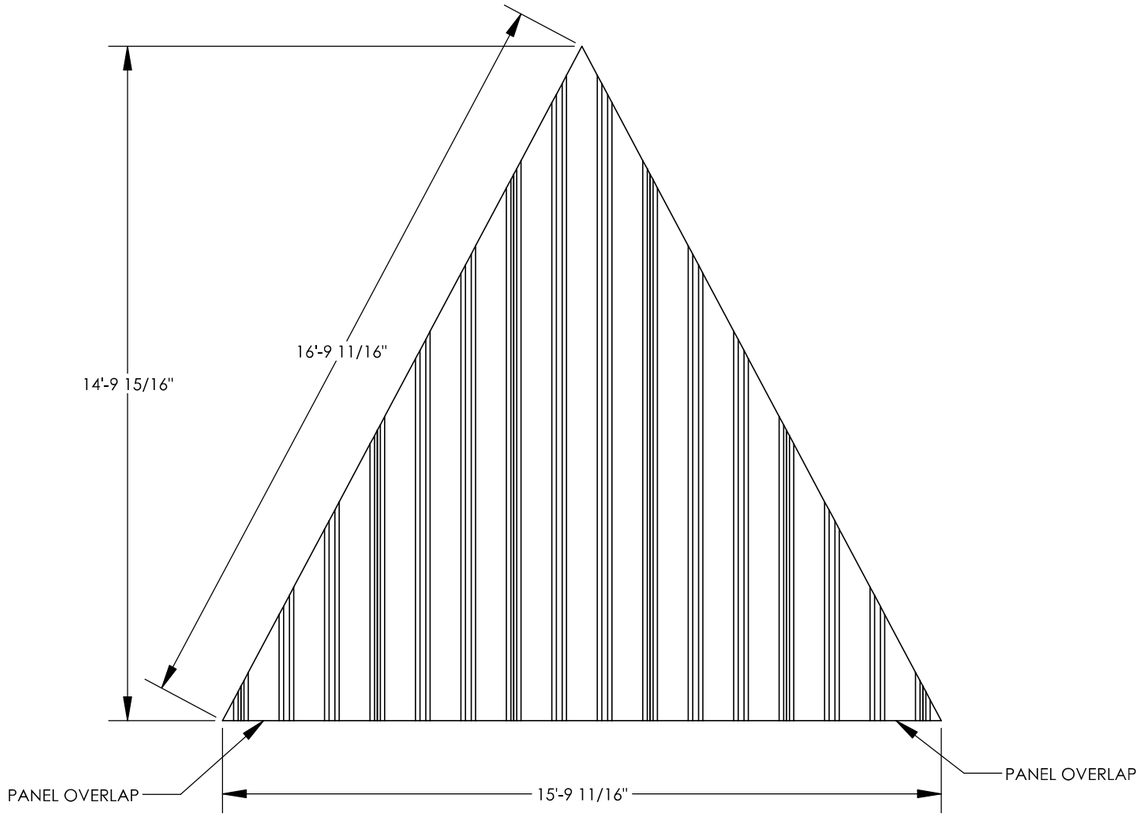

MULTI-RIB NOTES:

1. THE DETAILS SHOWN ARE SUGGESTIONS OR GUIDELINES ON HOW TO ERECT THE SYSTEMS. THE INFORMATION SHOWN IS ACCURATE, BUT IT IS NOT INTENDED TO COVER ALL INSTANCES, BUILDING REQUIREMENTS, DESIGNS OR CODES. THE DETAILS MAY REQUIRE CHANGES OR REVISIONS DUE TO FIELD CONDITIONS.
2. IT SHALL BE THE RESPONSIBILITY OF THE ERECTOR TO ENSURE THAT THE DETAILS MEET PARTICULAR BUILDING REQUIREMENTS AND TO ASSURE ADEQUATE WATER TIGHTNESS.
3. THE ERECTOR SHOULD THOROUGHLY FAMILIARIZE HIMSELF/HERSELF WITH ALL ERECTION INSTRUCTIONS BEFORE STARTING WORK.
4. THE PANELS SHOULD BE INSTALLED PLUMB, STRAIGHT, AND ACCURATELY TO THE ADJACENT WORK.
5. FLASHING AND TRIM SHALL BE INSTALLED TRUE, AND IN PROPER ALIGNMENT, WITH ANY EXPOSED FASTENERS EQUALLY SPACED FOR THE BEST APPEARANCE.
6. SEALANT SHALL BE FIELD APPLIED ON DRY, CLEAN SURFACES. SOME FIELD CUTTING AND FITTING OF PANELS AND FLASHING IS TO BE EXPECTED BY THE ERECTOR AND MINOR FIELD CORRECTIONS ARE A PART OF NORMAL ERECTION WORK.
7. WORKMANSHIP SHALL BE OF THE BEST INDUSTRY STANDARDS AND INSTALLATION SHALL BE PERFORMED BY EXPERIENCED METAL CRAFTSMEN.
8. METAL SHAVINGS FROM DRILLING OR INSTALLATION OF ROOF FASTENERS MUST BE CAREFULLY REMOVED FROM THE ROOF BY BRUSHING OR SWEEPING AT THE END OF EACH DAY DURING INSTALLATION. SHAVINGS LEFT ON THE ROOF WILL QUICKLY RUST AND STAIN THE ROOF FINISH.

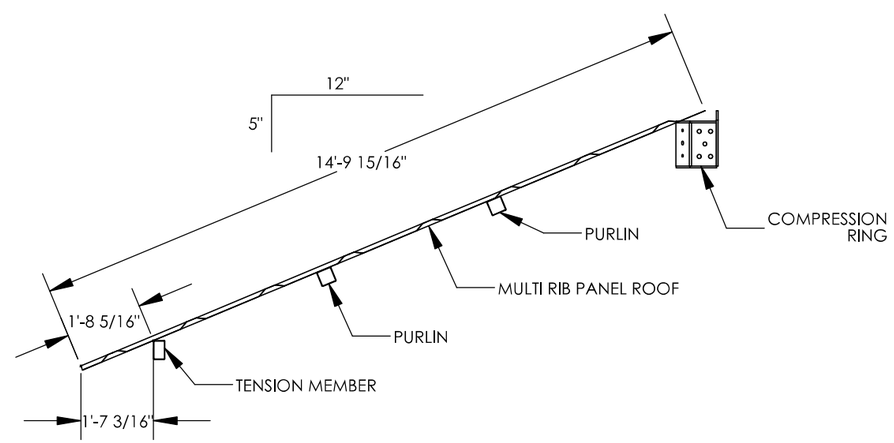

PROFESSIONAL ENGINEER CHRISTOPHER M EVANS C78816 CIVIL STATE OF CALIFORNIA

Digitally signed by Christopher Evans
Date: 2025.04.17 16:03:15-04'00'

IF THESE DRAWINGS ARE SEALED, THE SEAL APPLIES ONLY TO BUILDING COMPONENTS (AND FOUNDATION DESIGN IF APPLICABLE) DETAILED WITHIN THESE DRAWINGS.

(616)399-1963
www.poligon.com
byPORTERCORP
poligon ©
COPYRIGHT 2014
PATENTED OR PATENTS PENDING
PORTERCORP 4240 N. 136th AVE HOLLAND, MI 49424

PRINT DATE: 4/15/2025
SCALE: 1:40
DRAWN BY:
REV LEVEL: A
CREATION DATE: 9/8/2015
BUILDING NO: P21520
CAD MODEL: ~P21520

PROJECT: Sierra Creek Park
PROJECT LOCATION: Antelope, CA
DRAWING: ROOF LAYOUT

SHEET
6.2

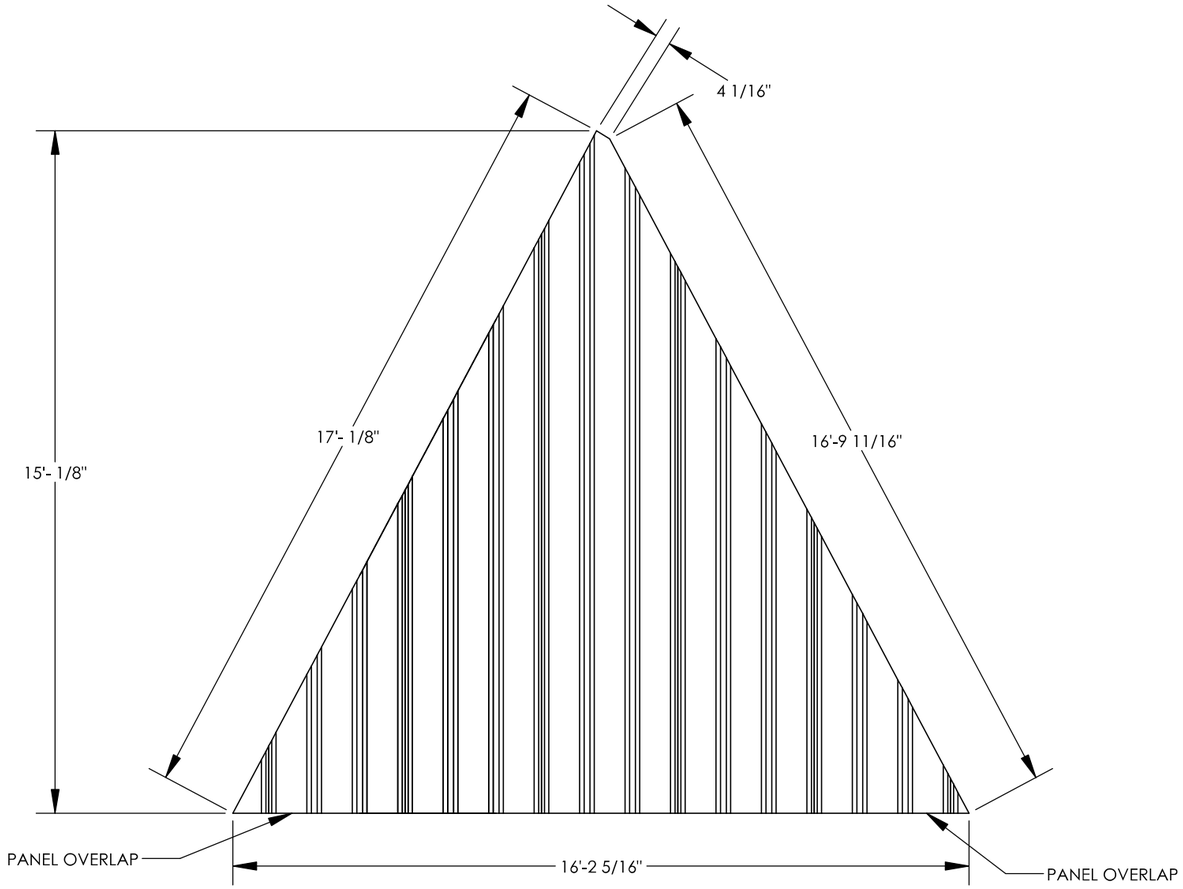

MULTI-RIB NOTES:

1. THE DETAILS SHOWN ARE SUGGESTIONS OR GUIDELINES ON HOW TO ERECT THE SYSTEMS. THE INFORMATION SHOWN IS ACCURATE, BUT IT IS NOT INTENDED TO COVER ALL INSTANCES, BUILDING REQUIREMENTS, DESIGNS OR CODES. THE DETAILS MAY REQUIRE CHANGES OR REVISIONS DUE TO FIELD CONDITIONS.
2. IT SHALL BE THE RESPONSIBILITY OF THE ERECTOR TO ENSURE THAT THE DETAILS MEET PARTICULAR BUILDING REQUIREMENTS AND TO ASSURE ADEQUATE WATER TIGHTNESS.
3. THE ERECTOR SHOULD THOROUGHLY FAMILIARIZE HIMSELF/HERSELF WITH ALL ERECTION INSTRUCTIONS BEFORE STARTING WORK.
4. THE PANELS SHOULD BE INSTALLED PLUMB, STRAIGHT, AND ACCURATELY TO THE ADJACENT WORK.
5. FLASHING AND TRIM SHALL BE INSTALLED TRUE, AND IN PROPER ALIGNMENT, WITH ANY EXPOSED FASTENERS EQUALLY SPACED FOR THE BEST APPEARANCE.
6. SEALANT SHALL BE FIELD APPLIED ON DRY, CLEAN SURFACES. SOME FIELD CUTTING AND FITTING OF PANELS AND FLASHING IS TO BE EXPECTED BY THE ERECTOR AND MINOR FIELD CORRECTIONS ARE A PART OF NORMAL ERECTION WORK.
7. WORKMANSHIP SHALL BE OF THE BEST INDUSTRY STANDARDS AND INSTALLATION SHALL BE PERFORMED BY EXPERIENCED METAL CRAFTSMEN.
8. METAL SHAVINGS FROM DRILLING OR INSTALLATION OF ROOF FASTENERS MUST BE CAREFULLY REMOVED FROM THE ROOF BY BRUSHING OR SWEEPING AT THE END OF EACH DAY DURING INSTALLATION. SHAVINGS LEFT ON THE ROOF WILL QUICKLY RUST AND STAIN THE ROOF FINISH.

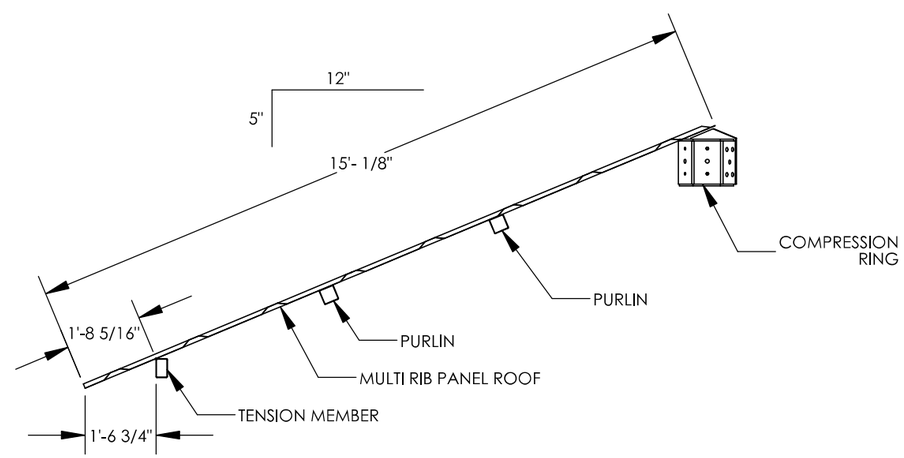

PROFESSIONAL ENGINEER CHRISTOPHER M EVANS C78816 CIVIL STATE OF CALIFORNIA

Digitally signed by Christopher Evans
Date: 2025.04.17 16:03:27-04'00'

IF THESE DRAWINGS ARE SEALED, THE SEAL APPLIES ONLY TO BUILDING COMPONENTS DETAILED WITHIN THESE DRAWINGS AND SUPPLIED BY PORTER CORP AS WELL AS THE FOUNDATION DESIGN, IF APPLICABLE.

poligon by PORTER CORP
WWW.POLIGON.COM
MAIN: (616) 888-3500
FIELD SUPPORT: (616) 888-3504

PRINT DATE:	4/15/2025
SCALE:	1:40
DRAWN BY:	dave.spell
REV LEVEL:	A
CREATION DATE:	9/8/2015
ORDER NO:	82394
CAD MODEL:	~P21520

PROJECT: SIERRA CREEK PARK
PROJECT LOCATION: ANTELOPE, CA
DRAWING: ROOF LAYOUT

SHEET
6.3

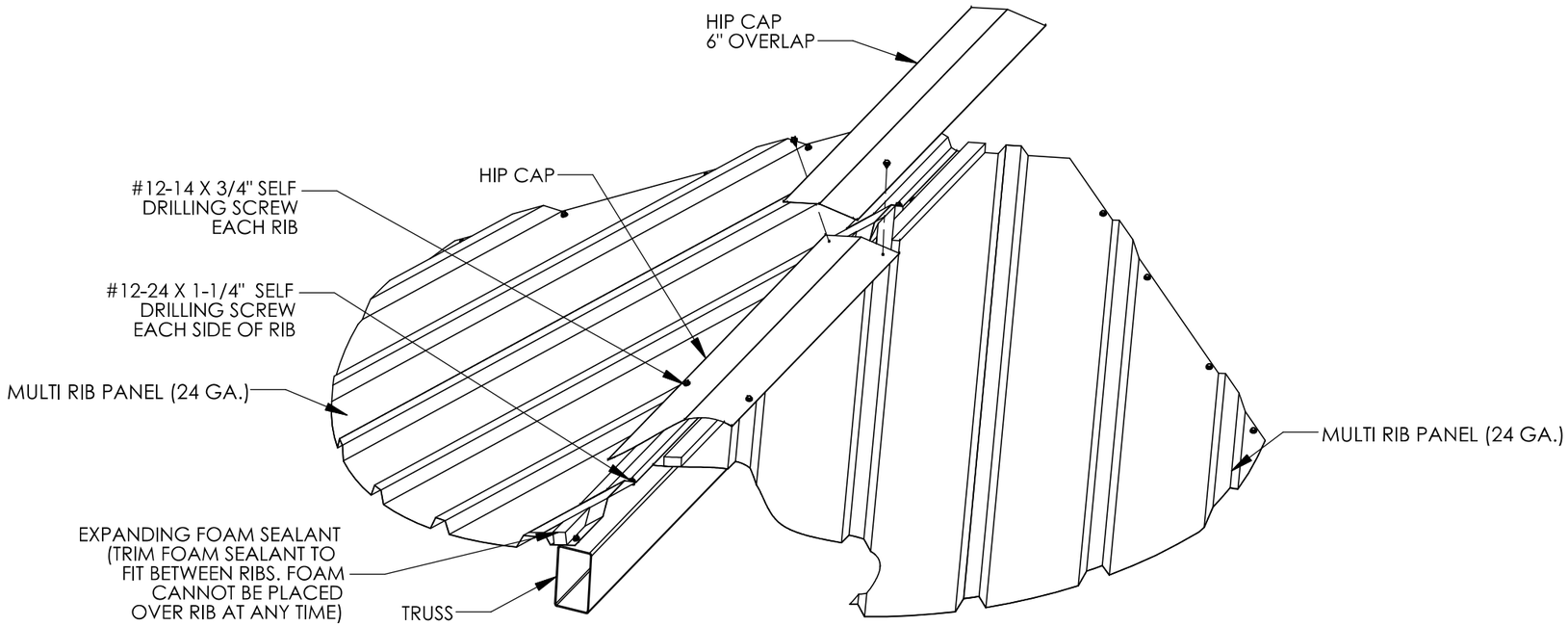

2023A TRUSS DETAIL MR-300

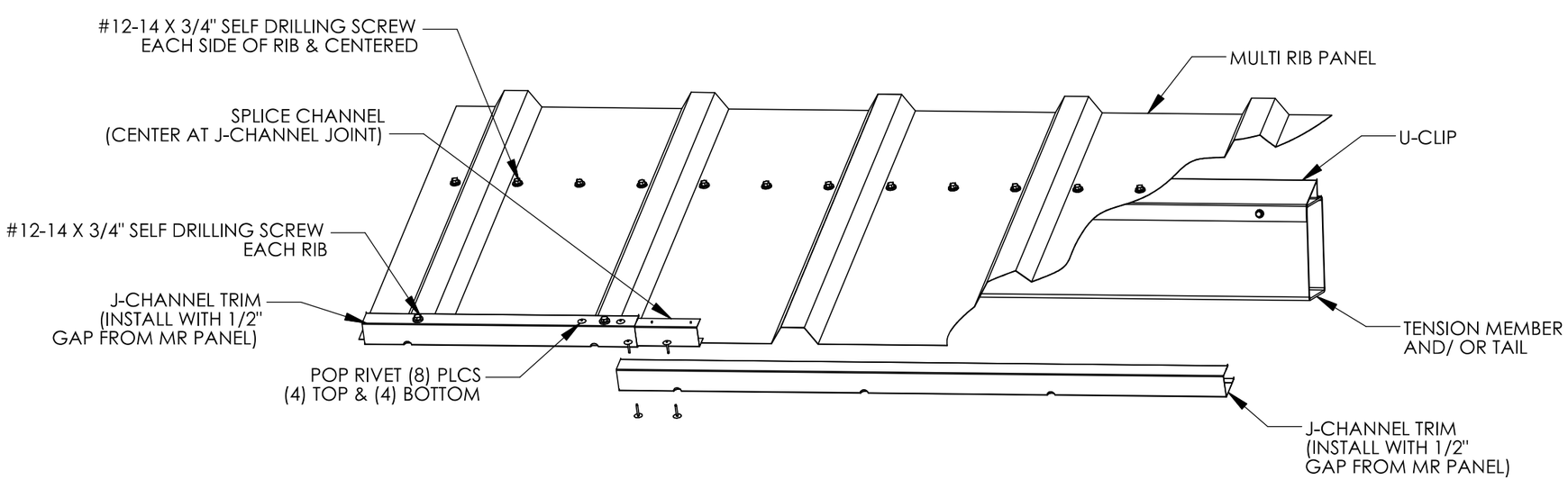

2024A EAVE DETAIL MR-100

PART DESCRIPTIONS:

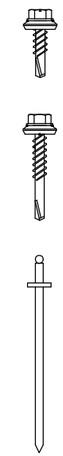

#12-14x3/4" SELF DRILLING SCREW.

#12-24x1 1/4" SELF DRILLING SCREW.

1/8" POP RIVET.

PROFESSIONAL ENGINEER CHRISTOPHER M EVANS C78816 CIVIL STATE OF CALIFORNIA

Digitally signed by Christopher Evans
Date: 2025.04.17 16:03:39-04'00'

IF THESE DRAWINGS ARE SEALED, THE SEAL APPLIES ONLY TO BUILDING COMPONENTS DETAILED WITHIN THESE DRAWINGS AND SUPPLIED BY PORTER CORP AS WELL AS THE FOUNDATION DESIGN, IF APPLICABLE.

poligon by PORTER CORP
WWW.POLIGON.COM
MAIN: (616) 888-3500
FIELD SUPPORT: (616) 888-3504

PRINT DATE: 4/15/2025
SCALE: NTS
DRAWN BY: dave.spell
REV LEVEL: A
CREATION DATE: 9/8/2015
ORDER NO: 82394
CAD MODEL: ~P21520

PROJECT: SIERRA CREEK PARK
PROJECT LOCATION: ANTELOPE, CA
DRAWING: ROOF CONNECTION DETAILS

SHEET 7

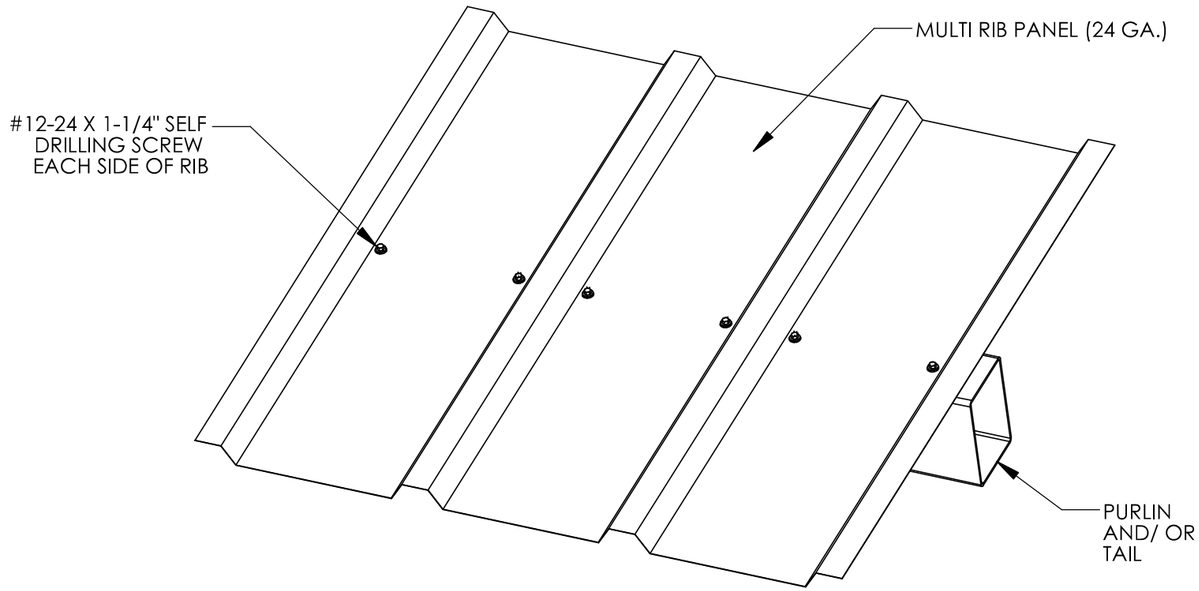

2022A PURLIN DETAIL MR-600

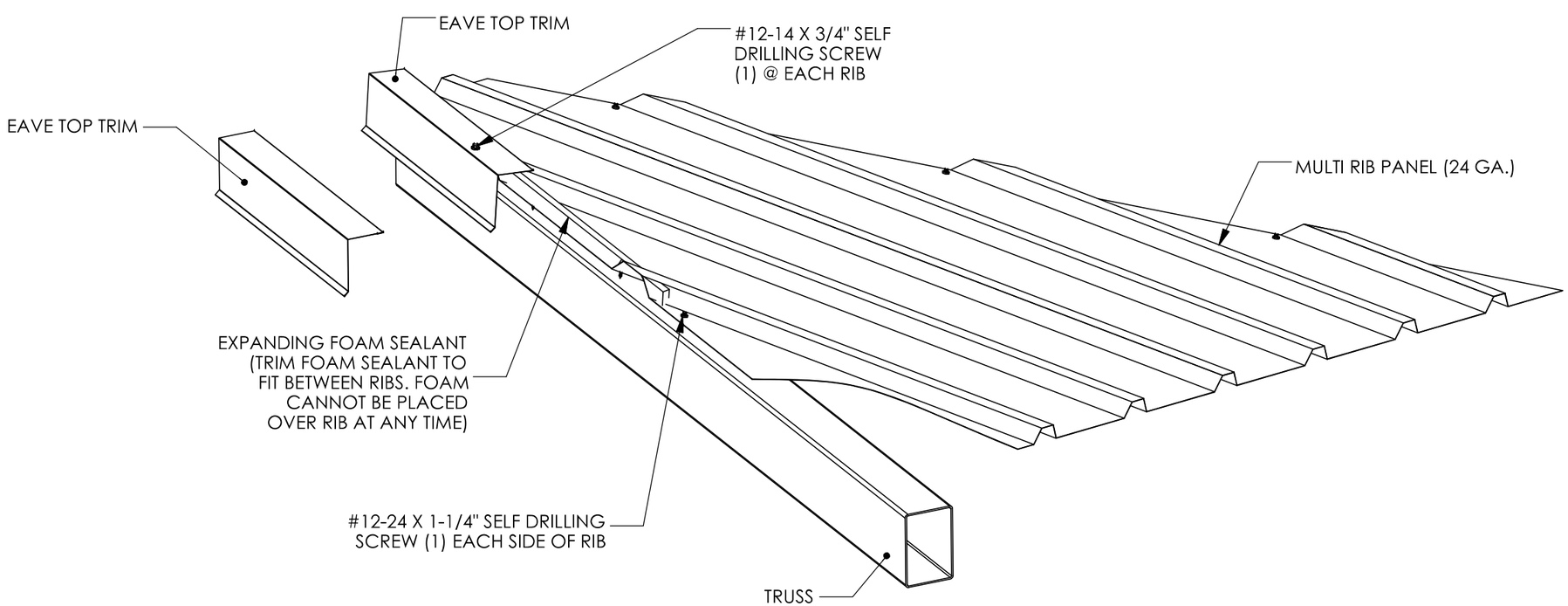

2023A RAKE DETAIL MR-408

PROFESSIONAL ENGINEER CHRISTOPHER M EVANS C78816 CIVIL STATE OF CALIFORNIA

Digitally signed by Christopher Evans
Date: 2025.04.17 16:03:54-04'00'

IF THESE DRAWINGS ARE SEALED, THE SEAL APPLIES ONLY TO BUILDING COMPONENTS DETAILED WITHIN THESE DRAWINGS AND SUPPLIED BY PORTER CORP AS WELL AS THE FOUNDATION DESIGN, IF APPLICABLE.

poligon by PORTER CORP
WWW.POLIGON.COM
MAIN: (616) 888-3500
FIELD SUPPORT: (616) 888-3504

PRINT DATE: 4/15/2025
SCALE: NTS
DRAWN BY: dave.spell
REV LEVEL: A
CREATION DATE: 9/8/2015
ORDER NO: 82394
CAD MODEL: ~P21520

PROJECT: SIERRA CREEK PARK
PROJECT LOCATION: ANTELOPE, CA
DRAWING: ROOF CONNECTION DETAILS

SHEET 7.1

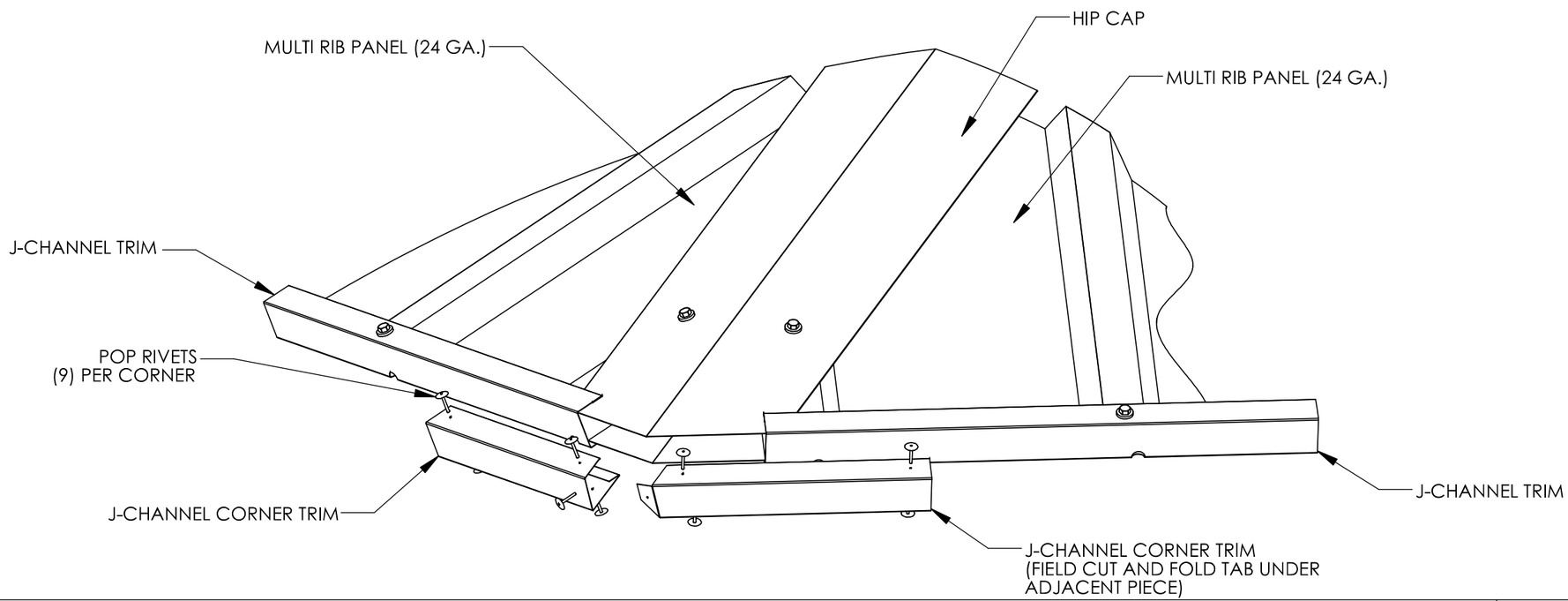

2022A

CORNER DETAIL

MR-900

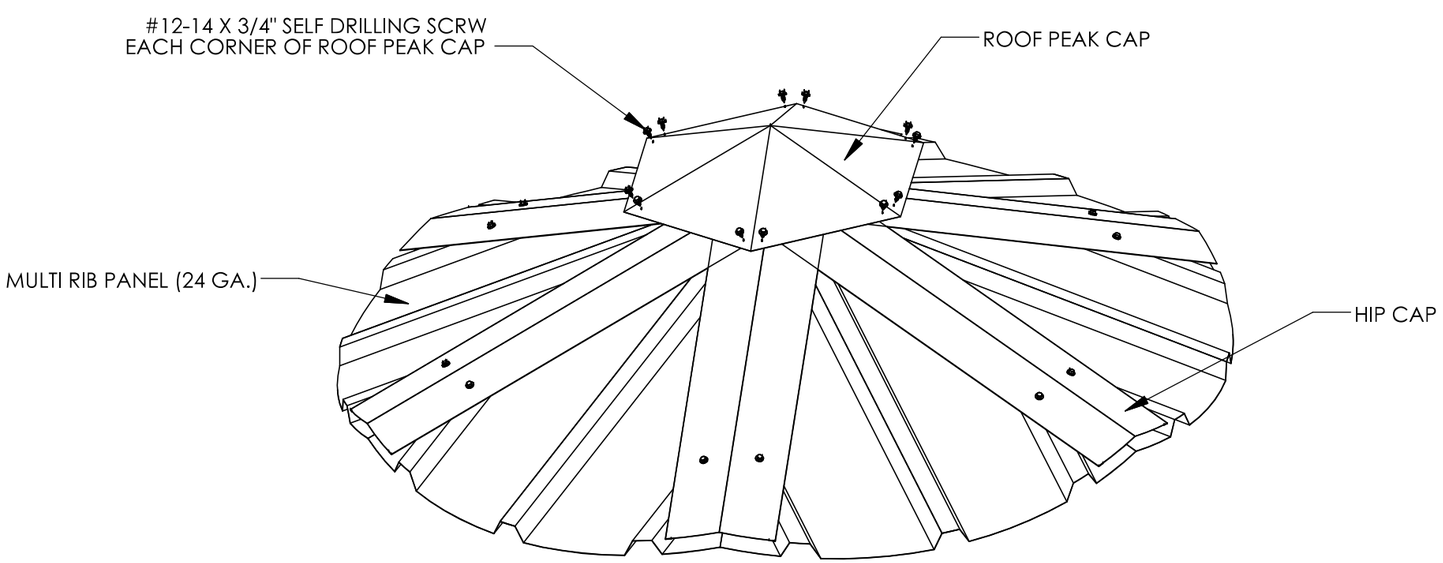

2022A

ROOF PEAK DETAIL

MR-800

Digitally signed by Christopher Evans
Date: 2025.04.17 16:04:08-04'00'

IF THESE DRAWINGS ARE SEALED, THE SEAL APPLIES ONLY TO BUILDING COMPONENTS DETAILED WITHIN THESE DRAWINGS AND SUPPLIED BY PORTER CORP AS WELL AS THE FOUNDATION DESIGN, IF APPLICABLE.

poligon by PORTER CORP
WWW.POLIGON.COM
MAIN: (616) 888-3500
FIELD SUPPORT: (616) 888-3504

PRINT DATE: 4/15/2025
SCALE: NTS
DRAWN BY: dave.spell
REV LEVEL: A
CREATION DATE: 9/8/2015
ORDER NO: 82394
CAD MODEL: ~P21520

PROJECT: SIERRA CREEK PARK
PROJECT LOCATION: ANTELOPE, CA
DRAWING: ROOF CONNECTION DETAILS

SHEET
7.2

poligon®

A Division of PORTERCORP 4240 N. 136th AVE HOLLAND, MI 49424 (616) 888-3500

PROJECT NAME: SIERRA CREEK PARK 2

PROJECT LOCATION: ANTELOPE, CA

BUILDING TYPE: OTC 40

ROOF TYPE: MULTI-RIB

BUILDING NUMBER: P21521

ORDER NUMBER: 82395

DRAWING LIST:

SHEET NUMBER	DRAWING DESCRIPTION
CS	COVER SHEET
1	ARCHITECTURAL ELEVATIONS
2-2.1	ANCHOR AND FOOTING LAYOUT / DETAILS
3	STRUCTURAL FRAMING PLAN
4-4.1	FRAME CONNECTION DETAILS
5	ELECTRICAL VIEWS - N/A
6-6.1	ROOF LAYOUT
7-7.2	ROOF CONNECTION DETAILS

MANUFACTURER NOTES:

MATERIALS:

DESCRIPTION	ASTM DESIGNATION
TUBE STEEL	A500 (GRADE C)
SCHEDULE PIPE	A53 (GRADE B)
RMT PIPE	A519
LIGHT GAGE COLD FORMED	A1003 (GRADE 50)
STRUCTURAL STEEL PLATE	A36
ROOF PANELS (STEEL)	A653
ANCHOR BOLTS	SEE SHEET 2.1

GENERAL NOTES:

1. PORTER CORP IS RESPONSIBLE ONLY FOR THE STRUCTURAL DESIGN OF THE STEEL STRUCTURE (AND FOUNDATION DESIGN IF APPLICABLE) IT SELLS TO THE BUILDER. PORTER CORP OR THEIR ENGINEER IS NOT THE DESIGN PROFESSIONAL OR ENGINEER OF RECORD FOR THE CONSTRUCTION PROJECT. PORTER CORP IS NOT RESPONSIBLE FOR THE DESIGN OF ANY COMPONENTS OR MATERIALS NOT SOLD BY IT OR THEIR INTERFACE AND CONNECTION WITH THE STEEL STRUCTURE.
2. UNLESS NOTED OTHERWISE, THIS STRUCTURE WAS DESIGNED TO ONLY SUPPORT WHAT IS SHOWN ON THESE DRAWINGS. POLIGON MUST BE CONTACTED IF ANYTHING ELSE IS TO BE ATTACHED TO THIS STRUCTURE (WALLS, COLUMN WRAPS, RAILINGS, ETC.) SO THE DESIGN OF THIS STRUCTURE CAN BE REVIEWED AND POSSIBLY REVISED.
3. THE ENGINEERING SEAL FOR THE STRUCTURE DETAILED IN THESE DRAWINGS IS ONLY VALID IF PORTER CORP DESIGNS AND FABRICATES THE STEEL COMPONENTS. FABRICATING THE STEEL COMPONENTS ELSEWHERE VOIDS THE ENGINEERING PROVIDED BY PORTER CORP.
4. UNLESS NOTED OTHERWISE, THIS STRUCTURE WAS DESIGNED ASSUMING A 20' SEPARATION BETWEEN ANY ADJACENT STRUCTURE WITH AN EAVE HEIGHT EQUAL TO OR GREATER THAN THE EAVE HEIGHT OF THIS STRUCTURE (SEE SNOW DESIGN DATA). IF THAT SEPARATION DOES NOT EXIST AND THE GROUND SNOW LOAD (PG) IS GREATER THAN 0 PSF, POLIGON MUST BE CONTACTED SO THE DESIGN OF THIS STRUCTURE CAN BE REVIEWED AND POSSIBLY REVISED.
5. STRUCTURAL STEEL SHALL BE DETAILED, FABRICATED, AND ERECTED IN ACCORDANCE WITH THE AMERICAN INSTITUTE OF STEEL CONSTRUCTION (AISC) SPECIFICATION MANUAL REFERENCED IN THE GOVERNING BUILDING CODE.
6. ALL WELDING IS PERFORMED BY AMERICAN WELDING SOCIETY (AWS) CERTIFIED WELDERS AND CONFORMS TO AWS D1.1 OR D1.3 AS REQUIRED.
7. PARTS SHOWN MAY BE UPGRADED DUE TO STANDARDIZED FABRICATION. REFER TO THE SHIPPING BILL OF MATERIALS AND FINAL INSTALLATION INSTRUCTIONS INCLUDED WITH THE STRUCTURE FOR POSSIBLE SUBSTITUTIONS AND IMPROVEMENTS.
8. FOR PROPER FIELD INSTALLATION OF THE BUILDING IT IS RECOMMENDED THAT THE PRIMARY FRAME INSTALLER AND THE ROOF INSTALLER HAVE A MINIMUM FIVE (5) YEARS DOCUMENTED EXPERIENCE INSTALLING THIS TYPE OF PRODUCT.
9. THE DRAWINGS REPRESENT THE FINISHED STRUCTURE. THE CONTRACTOR SHALL SUPERVISE AND DIRECT THE WORK, AND SHALL BE SOLELY RESPONSIBLE FOR CONSTRUCTION MEANS, TECHNIQUES, SEQUENCES AND PROCEDURES, INCLUDING BRACING, SHORING, LAYDOWN AND PROTECTION OF CONSTRUCTION MATERIALS, ETC. TEMPORARY SHORING AND BRACING SHALL BE THE RESPONSIBILITY OF THE CONTRACTOR.
10. FOR PROPER FIELD INSTALLATION OF THE BUILDING IT IS RECOMMENDED THAT ELECTRIC WIRING, IF REQUIRED, BE RUN THROUGH THE STRUCTURAL MEMBERS BEFORE THE BUILDING IS ERECTED.
11. MAKING HOLES, CUTS OR MODIFICATIONS TO THE STRUCTURAL STEEL MEMBERS IS NOT PERMITTED IN THE FIELD WITHOUT SPECIFIC APPROVAL OF POLIGON.

CERTIFICATES:
MIAMI-DADE COUNTY CERTIFICATE OF COMPETENCY NO. 24-0903.04
PCI (POWDER COATING INSTITUTE) 4000 CERTIFIED

FABRICATOR APPROVALS:
CITY OF PHOENIX, AZ APPROVED FABRICATOR #C08-2010
CITY OF LOS ANGELES, CA APPROVED FABRICATOR #FB01596
CITY OF RIVERSIDE, CA APPROVED FABRICATOR #SF_000042
CITY OF HOUSTON, TX APPROVED FABRICATOR #470
CLARK COUNTY, NV APPROVED FABRICATOR #264
STATE OF UTAH APPROVED FABRICATOR 02008-14
AISC APPROVED FABRICATOR C-00024530
AWS CERTIFIED WELDING FABRICATOR #240707F

AMERICAN INSTITUTE OF STEEL CONSTRUCTION AISC FOUNDED 1921

DESIGN CRITERIA:

GENERAL:
2022 CALIFORNIA BUILDING CODE
RISK CATEGORY: II

DEAD LOAD:
ROOF DEAD LOAD: 2 PSF
FRAME DEAD LOAD: SELF WEIGHT

LIVE LOAD:
ROOF LIVE LOAD: 20 PSF

SNOW DESIGN DATA:
GROUND SNOW LOAD (Pg): 0 PSF
FLAT ROOF SNOW LOAD (Pf): 0 PSF
SNOW EXPOSURE FACTOR (Ce): 1.0
SNOW LOAD IMPORTANCE FACTOR (Is): 1.0
THERMAL FACTOR (Ct): 1.2
ROOF SLOPE FACTOR (Cs): 1.0
DRIFT SURCHARGE LOAD (Pd): 0 PSF
WIDTH OF SNOW DRIFT (w): 0 FT
MINIMUM HORIZONTAL SEPARATION DISTANCE (s): 20 FT

WIND DESIGN DATA:
BASIC WIND SPEED (V): 95 MPH
ALLOWABLE STRESS DESIGN WIND SPEED (Vasd): 74 MPH
GUST EFFECT FACTOR (G): 0.85
INTERNAL PRESSURE COEFFICIENT (GCpi): 0
WIND EXPOSURE: C

SEISMIC DESIGN DATA:
STEEL ORDINARY CANTILEVER
COLUMN SYSTEMS
SEISMIC IMPORTANCE FACTOR (Ie): 1.0
SEISMIC DESIGN CATEGORY: D
SEISMIC SITE CLASS: D DEFAULT
SHORT SPECTRAL RESPONSE (Ss): 0.48
1-SEC SPECTRAL RESPONSE (S1): 0.23
DESIGN SHORT SPECTRAL RESPONSE (SDS): 0.45
DESIGN 1-SEC SPECTRAL RESPONSE (SD1): 0.49
SEISMIC RESPONSE COEFFICIENT (Cs): 0.36
RESPONSE MODIFICATION COEFFICIENT (R): 1.25
EQUIVALENT LATERAL FORCE PROCEDURE
SEE CALCULATIONS FOR ADDITIONAL DATA

ADDITIONAL CRITERIA:
NONE

PROFESSIONAL ENGINEER CHRISTOPHER M EVANS C78816 CIVIL STATE OF CALIFORNIA

Digitally signed by Christopher Evans
Date: 2025.04.11 14:49:36-04'00'

IF THESE DRAWINGS ARE SEALED, THE SEAL APPLIES ONLY TO BUILDING COMPONENTS DETAILED WITHIN THESE DRAWINGS AND SUPPLIED BY PORTER CORP AS WELL AS THE FOUNDATION DESIGN, IF APPLICABLE.

poligon® WWW.POLIGON.COM
MAIN: (616) 888-3500
FIELD SUPPORT: (616) 888-3504
by PORTER CORP

PRINT DATE: 4/9/2025
SCALE: 1:75
DRAWN BY: anastasia.castle
REV LEVEL: A
CREATION DATE: 11/15/2016
ORDER NO: 82395
CAD MODEL: ~P21521

PROJECT: SIERRA CREEK PARK 2
PROJECT LOCATION: ANTELOPE, CA
DRAWING: COVER SHEET

SHEET
CS

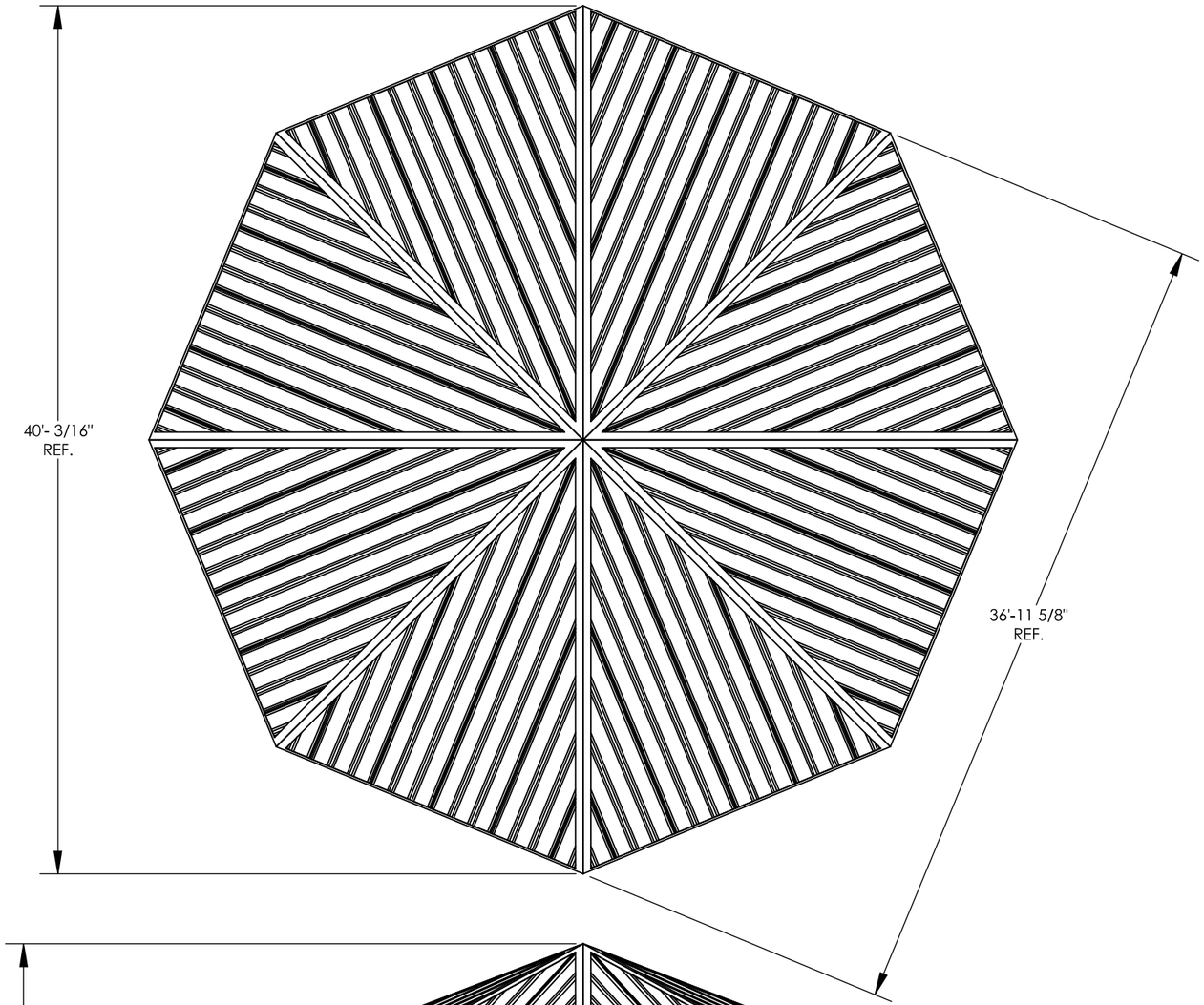

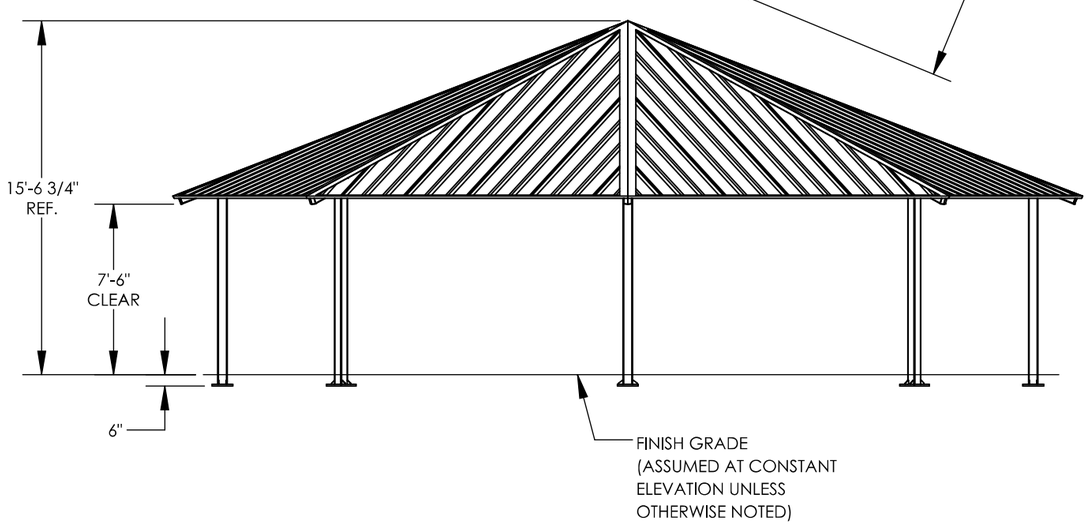

PROFESSIONAL ENGINEER
CHRISTOPHER M EVANS
C78816
CIVIL
STATE OF CALIFORNIA

Digitally signed by Christopher Evans
Date: 2025.04.11 14:49:39-04'00'

IF THESE DRAWINGS ARE SEALED, THE SEAL APPLIES ONLY TO BUILDING COMPONENTS DETAILED WITHIN THESE DRAWINGS AND SUPPLIED BY PORTER CORP AS WELL AS THE FOUNDATION DESIGN, IF APPLICABLE.

poligon® by PORTER CORP
WWW.POLIGON.COM
MAIN: (616) 888-3500
FIELD SUPPORT: (616) 888-3504

PRINT DATE:	4/9/2025
SCALE:	1:80
DRAWN BY:	anastasia.castle
REV LEVEL:	A
CREATION DATE:	11/15/2016
ORDER NO:	82395
CAD MODEL:	~P21521

PROJECT: SIERRA CREEK PARK 2
PROJECT LOCATION: ANTELOPE, CA
DRAWING: ARCHITECTURAL ELEVATIONS

SHEET
1

ANCHOR AND FOOTING LAYOUT NOTES:

1. ANCHORS MUST BE CENTERED IN FOOTINGS
2. FOOTINGS MUST BE TURNED TO ALIGN WITH COLUMN AND TRUSS CENTERLINE.

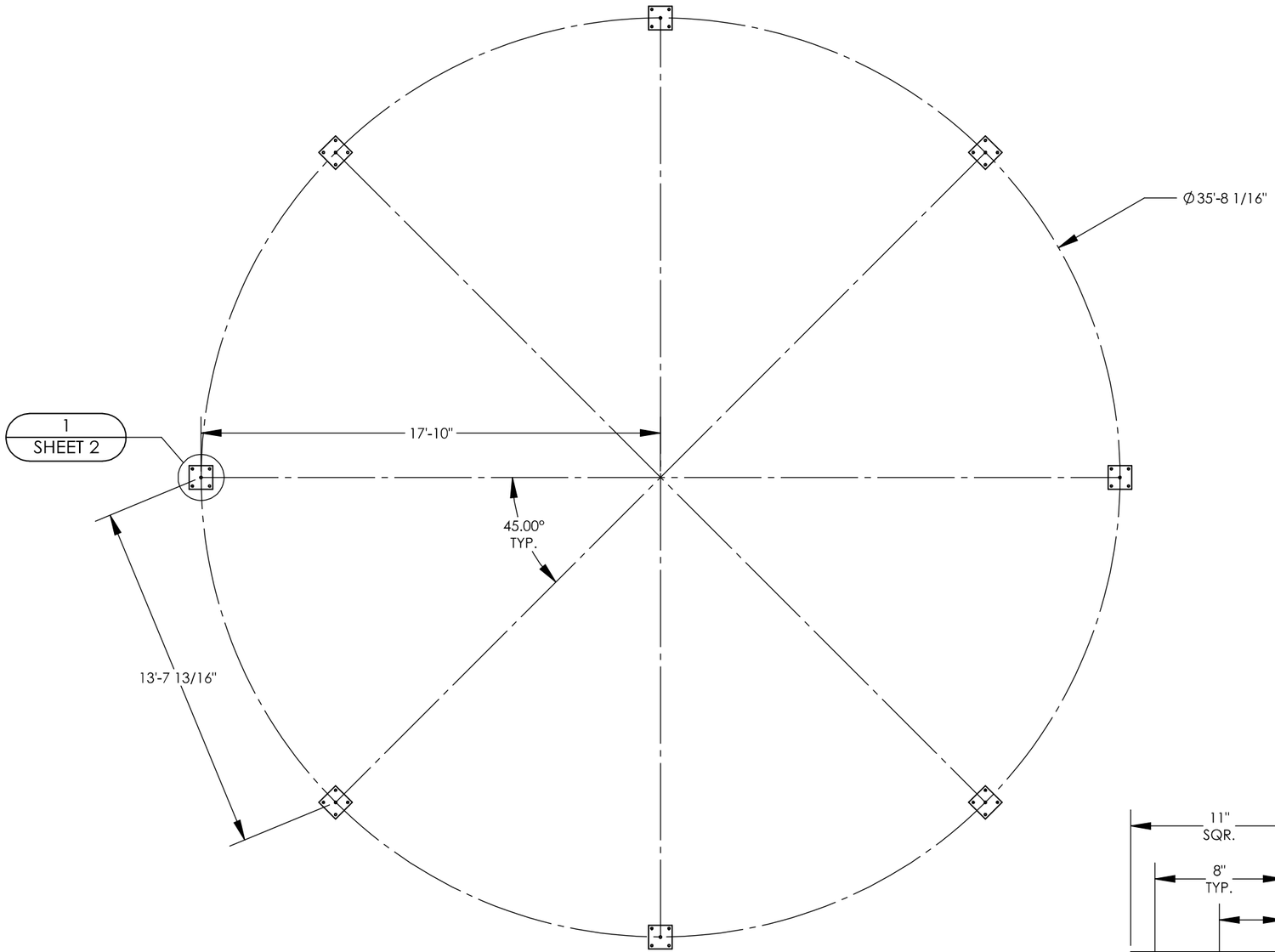

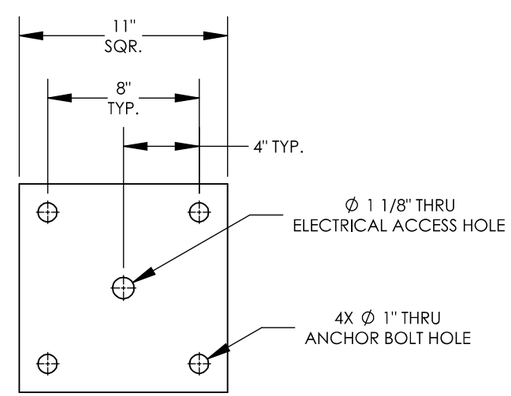

1/2 ANCHOR BOLT PATTERN
BASE PLATE THICKNESS: 1"

PROFESSIONAL ENGINEER
CHRISTOPHER M EVANS
C78816
CIVIL
STATE OF CALIFORNIA

Digitally signed by Christopher Evans
Date: 2025.04.11 14:49:41-04'00'

IF THESE DRAWINGS ARE SEALED, THE SEAL APPLIES ONLY TO BUILDING COMPONENTS DETAILED WITHIN THESE DRAWINGS AND SUPPLIED BY PORTER CORP AS WELL AS THE FOUNDATION DESIGN, IF APPLICABLE.

poligon® by PORTER CORP
WWW.POLIGON.COM
MAIN: (616) 888-3500
FIELD SUPPORT: (616) 888-3504

PRINT DATE: 4/9/2025
SCALE: 1:60
DRAWN BY: anastasia.castle
REV LEVEL: A
CREATION DATE: 11/15/2016
ORDER NO: 82395
CAD MODEL: ~P21521

PROJECT: SIERRA CREEK PARK 2
PROJECT LOCATION: ANTELOPE, CA
DRAWING: ANCHOR AND FOOTING LAYOUT

SHEET
2

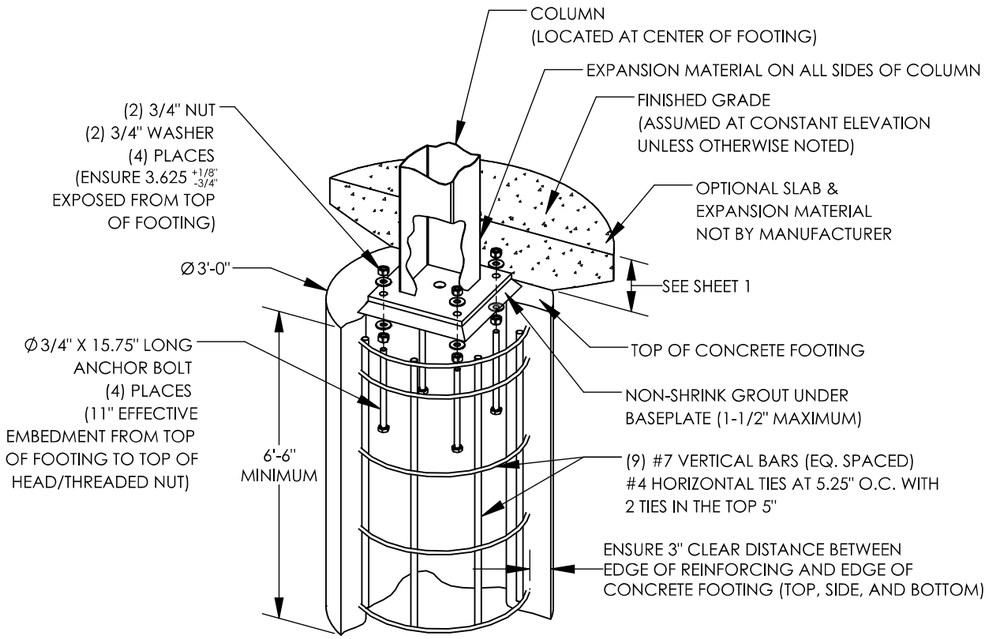

PIER FOOTING OPTION (EXTERNAL ANCHOR BOLTS)

FOOTING DESIGN BY MANUFACTURER, FOOTING MATERIALS BY OTHERS.
(TYPICAL WITH EACH COLUMN, QTY OF REINFORCING AND ANCHOR BOLTS
SPECIFIED IN NOTES REFLECT SITE SPECIFIC REQUIREMENTS)

ANCHOR BOLT NOTES - EXTERNAL (ANCHOR BOLTS LOCATED OUTSIDE COLUMN):

1. ANCHOR RODS TO BE ASTM F1554 GRADE 55 TYPE S1 WITH "UNC" CLASS 2A THREADS, HEAVY HEX NUTS AND STANDARD CUT WASHERS, UNLESS OTHERWISE NOTED.
2. ANCHOR BOLTS SHALL BE EITHER "HEADED" OR "THREADED WITH NUT" AS DEFINED IN THE AMERICAN INSTITUTE OF STEEL CONSTRUCTION MANUAL.
3. HOOKED ANCHOR BOLTS ARE NOT ACCEPTABLE.
4. ACCURATE ANCHOR BOLT PLACEMENT IS CRITICAL. TO ENSURE THE ANCHOR BOLT LAYOUT MEETS THE DIMENSIONS REQUIRED ON THE DRAWINGS, SURVEY (OR MEASURE) THE LOCATION OF ALL ANCHOR BOLTS PRIOR TO POURING THE FOOTINGS. AN ADDITIONAL SURVEY (OR MEASUREMENT) SHOULD BE MADE AFTER THE FOOTINGS ARE POURED TO CONFIRM THE ANCHOR BOLTS DID NOT SHIFT DURING THE CONCRETE POUR.
5. THE MANUFACTURER STRONGLY RECOMMENDS USING ANCHOR BOLT TEMPLATES BECAUSE THEY SIGNIFICANTLY IMPROVE THE ACCURACY OF ANCHOR BOLT PLACEMENT. AN ANCHOR BOLT TEMPLATE IS PROVIDED WITH ANY ANCHOR BOLT KIT PURCHASED.
6. IF OUTSIDE CONSULTING ENGINEERS ARE DESIGNING THE FOUNDATIONS FOR THIS STRUCTURE, THEY MUST REFER TO THE MANUFACTURER'S CALCULATIONS FOR MINIMUM CONCRETE PROPERTIES (COMPRESSIVE STRENGTH, EDGE DISTANCE, ETC.) REQUIRED FOR THE ANCHOR BOLT DESIGN.
7. ELECTRICAL ACCESS HOLE IS ALWAYS LOCATED IN THE COLUMN BASE PLATE AS SHOWN. TEMPLATE MUST BE REMOVED BEFORE INSTALLING COLUMNS.
8. GROUT UNDER BASEPLATES SHALL BE NON-METALLIC, NON-SHRINK GROUT WITH MINIMUM f'c=6500 PSI.
9. THE CALCULATIONS FOR THIS STRUCTURE ASSUME A FIXED COLUMN BASE.
10. THE FOLLOWING ADHESIVE ANCHORS MAY BE SUBSTITUTED FOR THE CAST-IN-PLACE ANCHOR BOLTS:
    -HILTI HIT-HY 200 (A OR R) V3 ADHESIVE WITH Ø 3/4" HAS-E ROD WITH 11" EFFECTIVE EMBEDMENT.
    CONTRACTOR SHALL FOLLOW ALL INSTALLATION SPECIFICATIONS AND REQUIREMENTS OF ANCHOR MANUFACTURER.

CONCRETE NOTES:

1. ALL CONCRETE CONSTRUCTION SHALL CONFORM TO THE CURRENT "ACI MANUAL OF CONCRETE PRACTICE".
2. PORTLAND CEMENT SHALL CONFORM TO ASTM C-150 TYPE II OR TYPE V.
3. IT IS THE CONTRACTOR'S RESPONSIBILITY TO VERIFY THE CONCRETE MIX DESIGN MEETS THE "ACI MANUAL OF CONCRETE PRACTICE" REQUIREMENTS FOR CONCRETE BY EXPOSURE CLASS.
4. THE USE OF CHLORIDE ACCELERATORS IS NOT PERMITTED.
5. COARSE AGGREGATE SHALL BE #57 OR LARGER.
6. CONCRETE AT PLACEMENT SHALL HAVE A SLUMP OF 4" +/- 1".
7. MINIMUM CONCRETE COMPRESSIVE STRENTGH AT 28 DAYS: 4500 PSI.
8. REINFORCING STEEL SHALL BE DEFORMED STEEL CONFORMING TO THE REQUIREMENTS OF ASTM A615 (DEFORMATIONS SHALL BE IN ACCORDANCE WITH ASTM A305) AS FOLLOWS:
   GRADE 60: #4 BARS AND LARGER
   GRADE 40: #3 BARS
9. PRIOR TO PLACING OF CONCRETE, REINFORCING STEEL AND EMBEDDED ITEMS SHALL BE WELL SECURED IN POSITION.
10. MAINTAIN 3" CONCRETE COVERAGE TO FACE OF BARS UNLESS OTHERWISE NOTED.
11. BARS SHALL BE CLEAN OF RUST, GREASE OR OTHER MATERIAL LIKELY TO IMPAIR BOND. BENDS SHALL BE MADE COLD.
12. WELDING OF REINFORCEMENT IS NOT ALLOWED.
13. ALL EXPOSED EXTERNAL CORNER OF FOUNDATIONS TO BE CHAMFERED BY 3/4" BY 45 DEGREES UNLESS NOTED OTHERWISE.
14. ALL NEW CONCRETE SHALL BE CURED IMMEDIATELY AFTER FINISHING OF REMOVING FORMWORK. CURING SHALL BE EITHER A MOIST CURE METHOD OR THE USE OF A CURING COMPOUND.

FOUNDATION NOTES:

1. FOUNDATIONS SHALL BEAR ON COMPETENT, UNDISTURBED SOIL OR 95% COMPACTED FILL. IF SIGNS OF ORGANIC MATERIAL, UNCONTROLLED FILL, CLAY OR SILT, HIGH WATER TABLE OR OTHER POSSIBLE DETRIMENTAL CONDITIONS ARE FOUND, CONSTRUCTION OF THE FOUNDATIONS MUST BE STOPPED AND A GEOTECHNICAL ENGINEER BE CONTACTED.
2. NO FOUNDATIONS SHALL BE PLACED INTO OR ADJACENT TO SUBGRADE CONTAINING WATER, ICE, FROST, ORGANIC OR LOOSE MATERIAL.
3. WATER SHALL NOT BE PERMITTED TO ACCUMULATE IN FOUNDATION EXCAVATIONS.
4. IT IS THE CONTRACTOR'S RESPONSIBILITY TO VERIFY THE LOCAL FROST DEPTH REQUIREMENT PRIOR TO CONSTRUCTION.
5. IF FOUNDATIONS SHOWN DO NOT MEET LOCAL FROST DEPTH REQUIREMENTS, EXTEND THE DRILLED PIER FOUNDATION AS REQUIRED, EXTENDING THE VERTICAL BARS AND PROVIDING ADDITIONAL TIES TO MEET SPACING REQUIREMENTS AS SHOWN. IF FROST DEPTH REQUIREMENTS ARE NOT MET, AND NO DRILLED PIER DESIGN IS PROVIDED, CONTACT POLIGON.
6. ALLOWABLE SOIL PRESSURES (AS APPLICABLE):

DRILLED PIER	
VERTICAL BEARING	1500 PSF
LATERAL BEARING	100 PSF/FT

THE FOUNDATION DESIGN SHOWN ON THESE DRAWINGS IS NOT SITE SPECIFIC, BUT BASED ON THE PRESUMPTIVE ALLOWABLE FOUNDATION PRESSURES IN CHAPTER 18 OF THE BUILDING CODE (CLASS 5 SOIL). THE BUILDING OFFICIAL IN THE JURISDICTION IN WHICH THIS STRUCTURE IS LOCATED MAY REQUIRE A SITE SPECIFIC GEOTECHNICAL REPORT OR LETTER FROM A QUALIFIED LOCAL PROFESSIONAL ENGINEER ATTESTING TO WHETHER THE ACTUAL SITE CONDITIONS MEET THE ASSUMPTIONS IDENTIFIED ABOVE.

PROFESSIONAL ENGINEER
CHRISTOPHER M EVANS
C78816
CIVIL
STATE OF CALIFORNIA

Digitally signed by Christopher Evans
Date: 2025.04.11 14:49:44-04'00'

IF THESE DRAWINGS ARE SEALED, THE SEAL APPLIES ONLY TO BUILDING COMPONENTS DETAILED WITHIN THESE DRAWINGS AND SUPPLIED BY PORTER CORP AS WELL AS THE FOUNDATION DESIGN, IF APPLICABLE.

poligon®
WWW.POLIGON.COM
MAIN: (616) 888-3500
FIELD SUPPORT: (616) 888-3504
by PORTER CORP

PRINT DATE: 4/9/2025
SCALE: 1:12
DRAWN BY: anastasia.castle
REV LEVEL: A
CREATION DATE: 11/15/2016
ORDER NO: 82395
CAD MODEL: ~P21521
PROJECT: SIERRA CREEK PARK 2
PROJECT LOCATION: ANTELOPE, CA
DRAWING: ANCHOR AND FOOTING DETAILS
SHEET
2.1

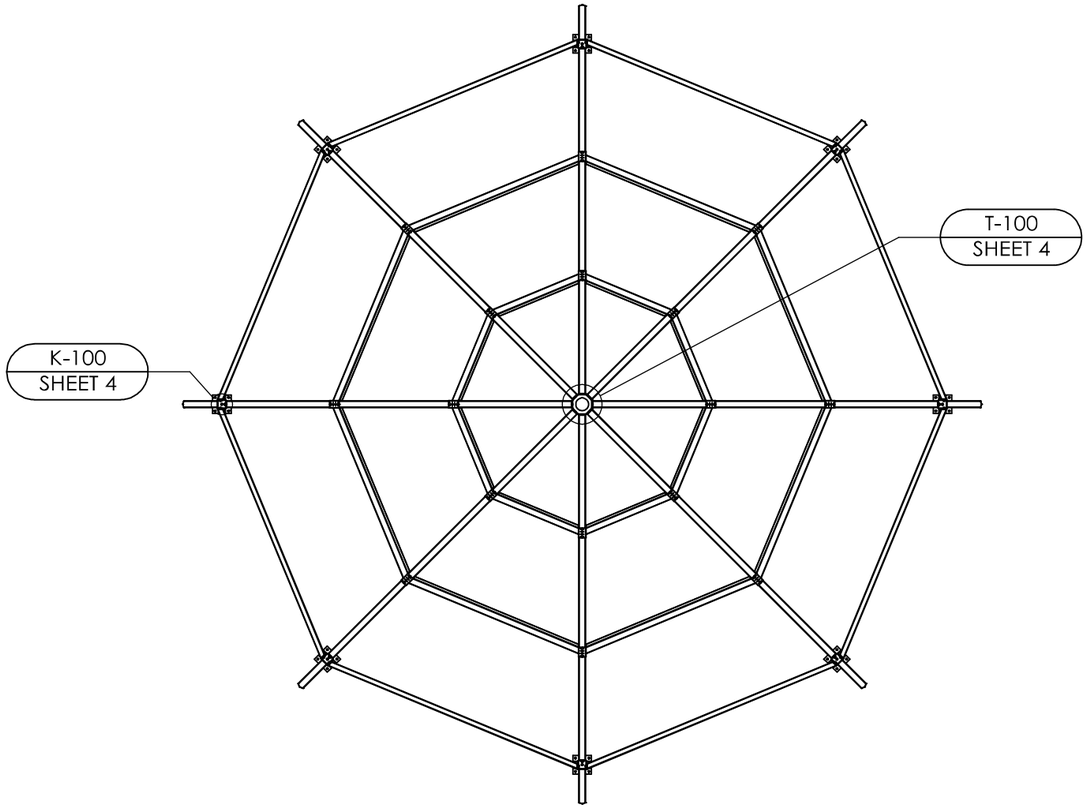

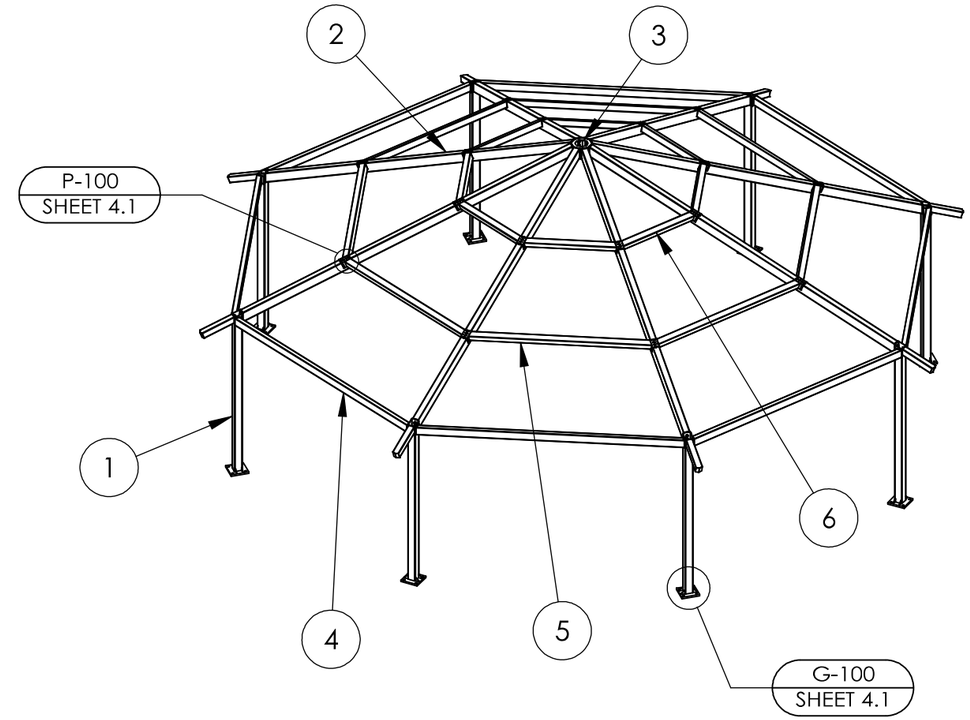

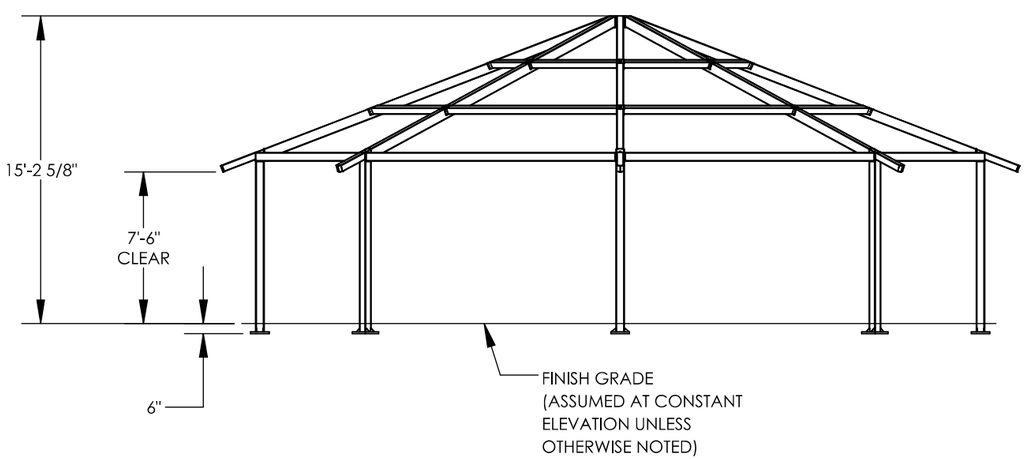

ITEM	QTY.	PART NO.	DESCRIPTION	MATERIAL SIZE	WEIGHT
6	8	-	PURLIN B ASM	HSS4"X4"X1/8"	31.19
5	8	-	PURLIN A ASM	HSS4"X4"X1/8"	60.14
4	8	-	T-MEM ASM	HSS5"X3"X1/8"	87.99
3	1	-	OCT C-RING ASM	3/8" PLATE	43.74
2	8	-	TRUSS ASM	HSS6"X4"X1/8"	153.20
1	8	-	COLUMN ASM	HSS5"X5"X3/16"	155.38

PROFESSIONAL ENGINEER
CHRISTOPHER M EVANS
C78816
CIVIL
STATE OF CALIFORNIA

Digitally signed by Christopher Evans
Date: 2025.04.11 14:49:47-04'00'

IF THESE DRAWINGS ARE SEALED, THE SEAL APPLIES ONLY TO BUILDING COMPONENTS DETAILED WITHIN THESE DRAWINGS AND SUPPLIED BY PORTER CORP AS WELL AS THE FOUNDATION DESIGN, IF APPLICABLE.

poligon® by PORTER CORP
WWW.POLIGON.COM
MAIN: (616) 888-3500
FIELD SUPPORT: (616) 888-3504

PRINT DATE: 4/9/2025
SCALE: 1:90
DRAWN BY: anastasia.castle
REV LEVEL: A
CREATION DATE: 11/15/2016
ORDER NO: 82395
CAD MODEL: ~P21521

PROJECT: SIERRA CREEK PARK 2
PROJECT LOCATION: ANTELOPE, CA
DRAWING: STRUCTURAL FRAMING PLAN

SHEET
3

NOTE:
SEE UC-100 FOR U-CLIP INSTALLATION

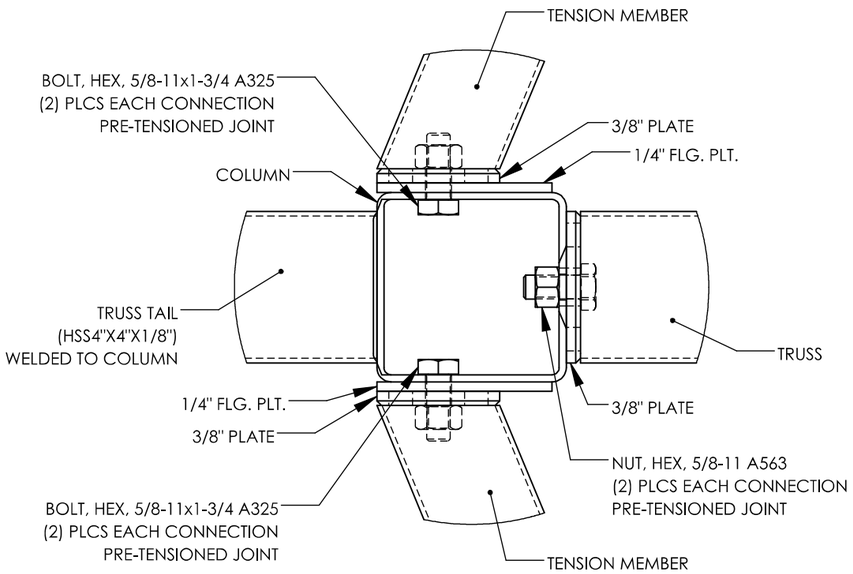

COLUMN CONNECTIONS | K-100

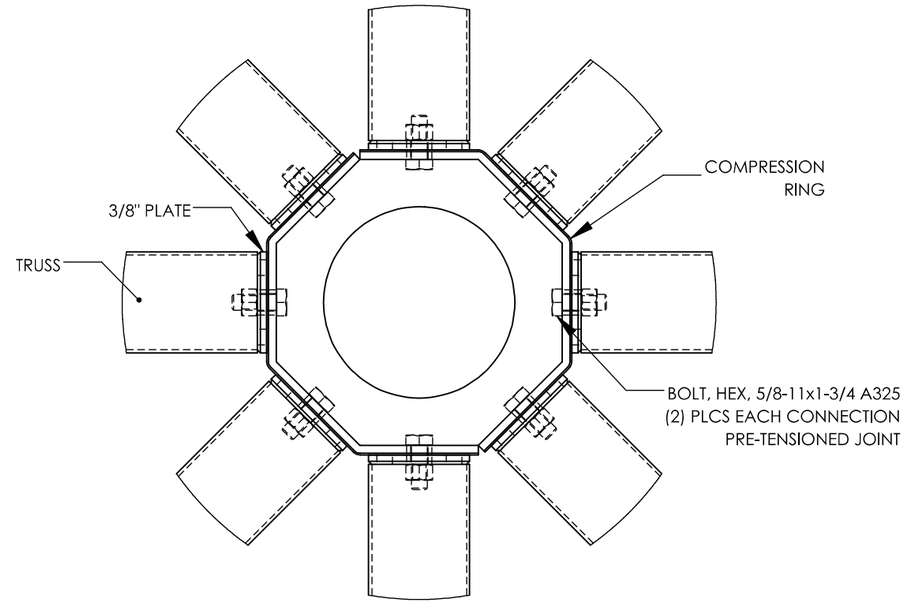

COMPRESSION MEMBER CONNECTION | T-100

TURN-OF-NUT PRETENSIONING METHOD:
THESE STEPS ILLUSTRATE THE REQUIREMENTS OUTLINED IN THE AISC SPECIFICATION. THE ROTATION INDICATED IS ACCURATE FOR MOST BOLT DIAMETERS AND LENGTHS BUT IT IS THE RESPONSIBILITY OF THE INSTALLER TO MEET AISC REQUIREMENTS.

STEP ONE:
AFTER SNUG TIGHT, MATCH MARK PLATE

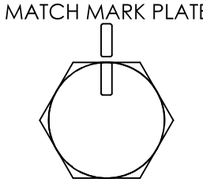

STEP TWO:
THEN TURN BOLT/NUT PAST SNUG TIGHT 1/3 TURN

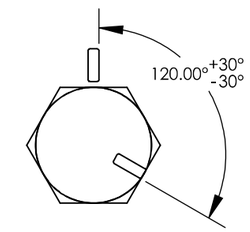

CONNECTION NOTES:

1. HIGH STRENGTH BOLTS SHALL BE ASTM F3125 (A325, TYPE 1) MATERIAL.
2. HIGH STRENGTH NUTS SHALL BE ASTM A563 (GRADE DH) MATERIAL.
3. HIGH STRENGTH WASHERS SHALL CONFORM TO ASTM F436.
4. UNLESS A SNUG-TIGHT JOINT IS PERMITTED IN THE CONNECTION DETAIL, ALL BOLTS ARE TO BE INSTALLED BY ONE OF THE FOLLOWING PRETENSIONING METHODS AS SPECIFIED IN THE AISC "SPECIFICATION FOR STRUCTURAL JOINTS USING HIGH-STRENGTH BOLTS", SECTION 8:
   A. TURN-OF-NUT PRETENSIONING
5. THE SNUG-TIGHT CONDITION IS THE TIGHTNESS THAT IS ATTAINED WITH A FEW IMPACTS OF AN IMPACT WRENCH OR THE FULL EFFORT OF AN IRONWORKER USING AN ORDINARY SPUD WRENCH TO BRING THE CONNECTED PLIES INTO FIRM CONTACT.
6. ANCHOR BOLTS NEED NOT BE TIGHTENED PAST SNUG-TIGHT.
7. WHEN INSTALLING BOLTS REFER TO SECTIONS 8.1 AND 8.2 OF THE "SPECIFICATION FOR STRUCTURAL JOINTS USING HIGH-STRENGTH BOLTS" FOR GUIDANCE.
8. LOCAL JURISDICTIONS MAY REQUIRE AN INSPECTOR TO BE PRESENT TO WITNESS HARDWARE INSTALLATION AND INDEPENDENT TESTING. INSPECTION REQUIREMENTS SHOULD BE VERIFIED BY INSTALLER PRIOR TO STEEL ERECTION.
9. ERECTION OF THE FRAMING MEMBERS WILL REQUIRE THE MAIN COLUMNS TO BE PLUMB SQUARE AND TIGHTENED TO THE TRUSSES AND/OR TENSION MEMBERS BEFORE INSTALLING THE PURLINS. PURLINS, IF REQUIRED, MUST BE AS SHOWN IN FRAMING PLAN.
10. TEMPORARY SHORING OR BRACING SHALL BE USED TO COMPACT THE JOINTS UNTIL THE CONNECTED PLIES ARE IN FIRM CONTACT PRIOR TO PRETENSIONING.
11. PRIOR TO THE ERECTION OF SHELTER COMPONENTS, IT IS RECOMMENDED TO CHASE AND TAP STRUCTURAL HARDWARE.
12. ALL BOLTS MUST BE LUBRICATED WITH WAX TO ASSIST IN PROPER TIGHTENING. TO LUBRICATE A BOLT IN THE FIELD, APPLY THE WAX STICK DOWN THE LENGTH OF THE BOLT'S THREADS.
13. TO PREVENT RUST STAINING OF FINISH, ALL METAL SHAVINGS MUST BE REMOVED AFTER INSTALLATION. ENSURE NO SHAVING ARE TRAPPED BETWEEN MATING SURFACES.
14. TOUCH-UP PAINT MUST BE APPLIED TO ALL EXPOSED FASTENERS. PERIODIC TOUCH-UP AT THESE CONNECTIONS IS REQUIRED.
15. ENSURE FRAME MEMBERS WITH DRAIN HOLES NEAR THE ENDS OF TUBES ARE INSTALLED FACING UP UNLESS SPECIFIED IN THE FRAME CONNECTION DETAILS.

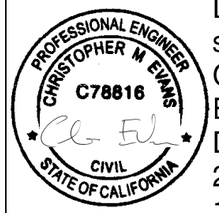

Digitally signed by Christopher Evans
Date: 2025.04.11 14:49:49-04'00'

IF THESE DRAWINGS ARE SEALED, THE SEAL APPLIES ONLY TO BUILDING COMPONENTS DETAILED WITHIN THESE DRAWINGS AND SUPPLIED BY PORTER CORP AS WELL AS THE FOUNDATION DESIGN, IF APPLICABLE.

poligon® by PORTER CORP
WWW.POLIGON.COM
MAIN: (616) 888-3500
FIELD SUPPORT: (616) 888-3504

PRINT DATE: 4/9/2025
SCALE: 1:4
DRAWN BY: anastasia.castle
REV LEVEL: A
CREATION DATE: 11/15/2016
ORDER NO: 82395
CAD MODEL: ~P21521

PROJECT: SIERRA CREEK PARK 2
PROJECT LOCATION: ANTELOPE, CA
DRAWING: FRAME CONNECTION DETAILS

SHEET
4

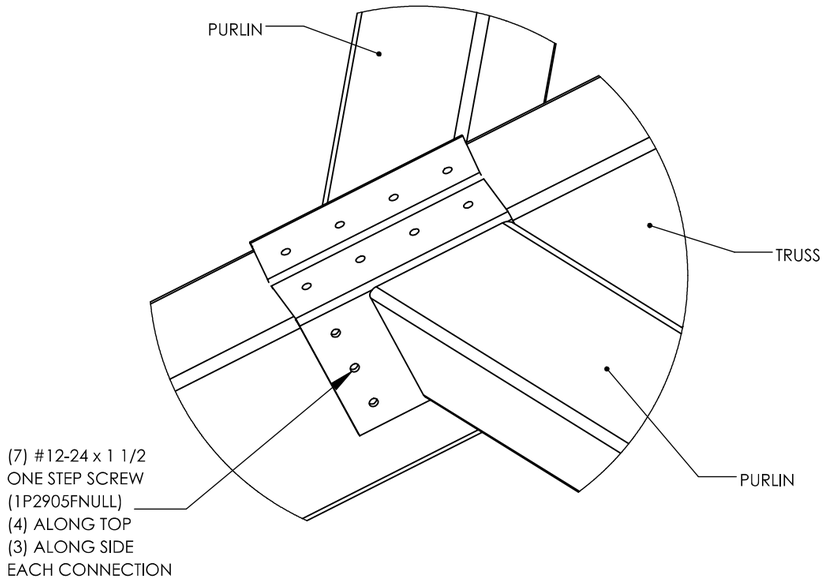

PURLIN CONNECTION | P-100

NOTE:
U-CLIP MUST BE ATTACHED TO TENSION MEMBER AS SHOWN PRIOR TO BUILDING ASSEMBLY.

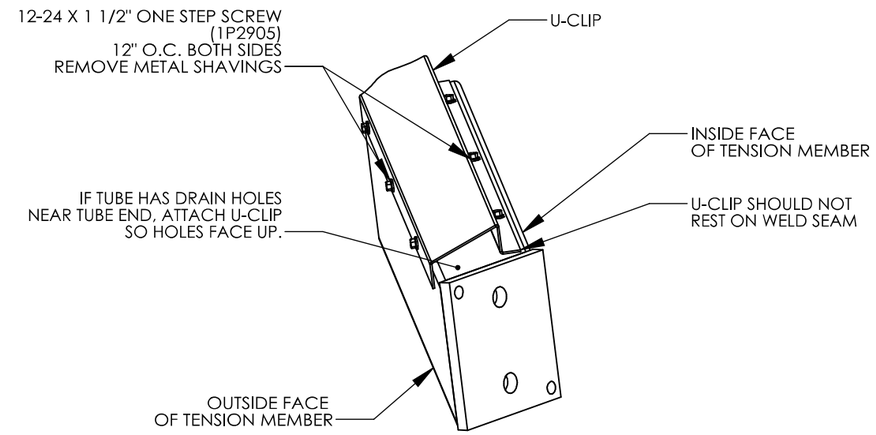

U-CLIP CONNECTION | UC-100

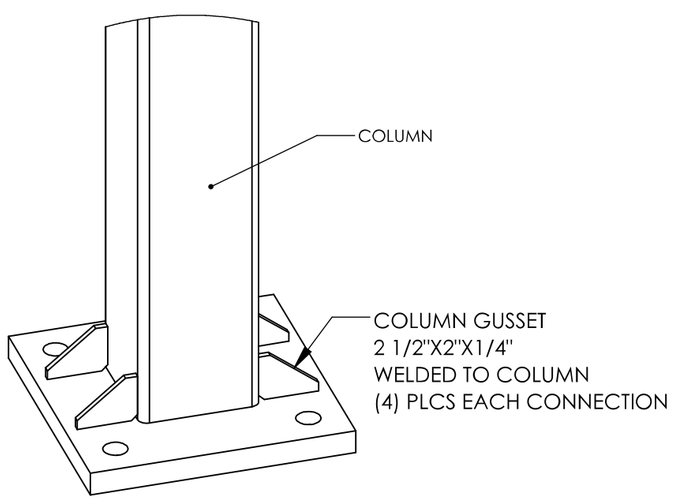

COLUMN GUSSET DETAIL | G-100

PROFESSIONAL ENGINEER
CHRISTOPHER M EVANS
C78816
CIVIL
STATE OF CALIFORNIA

Digitally signed by Christopher Evans
Date: 2025.04.11 14:49:53-04'00'

IF THESE DRAWINGS ARE SEALED, THE SEAL APPLIES ONLY TO BUILDING COMPONENTS DETAILED WITHIN THESE DRAWINGS AND SUPPLIED BY PORTER CORP AS WELL AS THE FOUNDATION DESIGN, IF APPLICABLE.

poligon®
WWW.POLIGON.COM
MAIN: (616) 888-3500
FIELD SUPPORT: (616) 888-3504
by PORTER CORP

PRINT DATE: 4/9/2025
SCALE: 1:4
DRAWN BY: anastasia.castle
REV LEVEL: A
CREATION DATE: 11/15/2016
ORDER NO: 82395
CAD MODEL: ~P21521

PROJECT: SIERRA CREEK PARK 2
PROJECT LOCATION: ANTELOPE, CA
DRAWING: FRAME CONNECTION DETAILS

SHEET
4.1

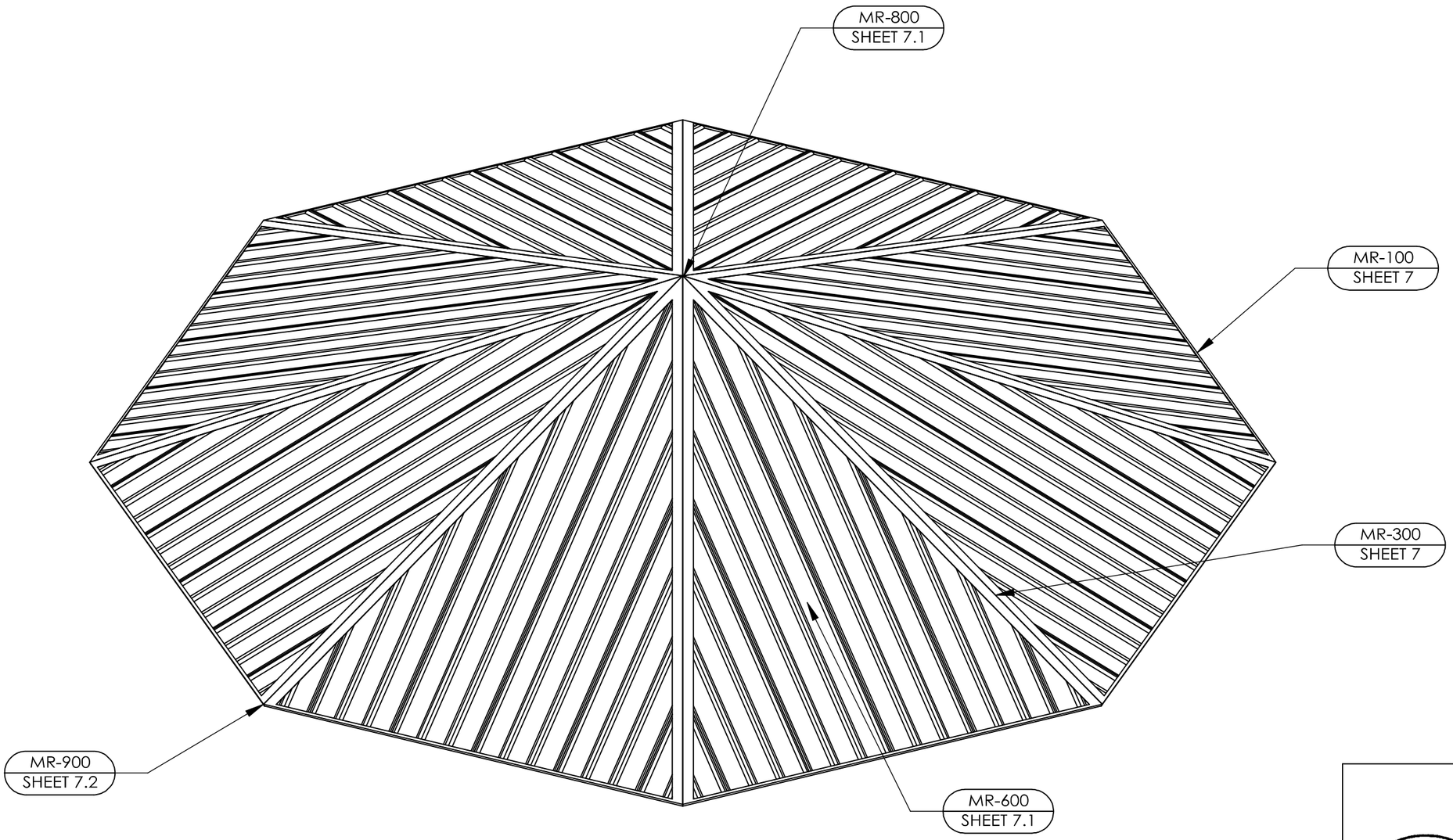

PROFESSIONAL ENGINEER
CHRISTOPHER M EVANS
C78816
CIVIL
STATE OF CALIFORNIA

Digitally signed by Christopher Evans
Date: 2025.04.11 14:50:44-04'00'

IF THESE DRAWINGS ARE SEALED, THE SEAL APPLIES ONLY TO BUILDING COMPONENTS DETAILED WITHIN THESE DRAWINGS AND SUPPLIED BY PORTER CORP AS WELL AS THE FOUNDATION DESIGN, IF APPLICABLE.

poligon® by PORTER CORP
WWW.POLIGON.COM
MAIN: (616) 888-3500
FIELD SUPPORT: (616) 888-3504

CREATION DATE: 11/15/2016	DRAWN BY: anastasia.castle
ORDER NO: 82395	REV LEVEL: A
CAD MODEL: ~P21521	
PRINT DATE: 4/9/2025	
SCALE: 1:48	

PROJECT: SIERRA CREEK PARK 2
PROJECT LOCATION: ANTELOPE, CA
DRAWING: ROOF OVERVIEW

SHEET
6

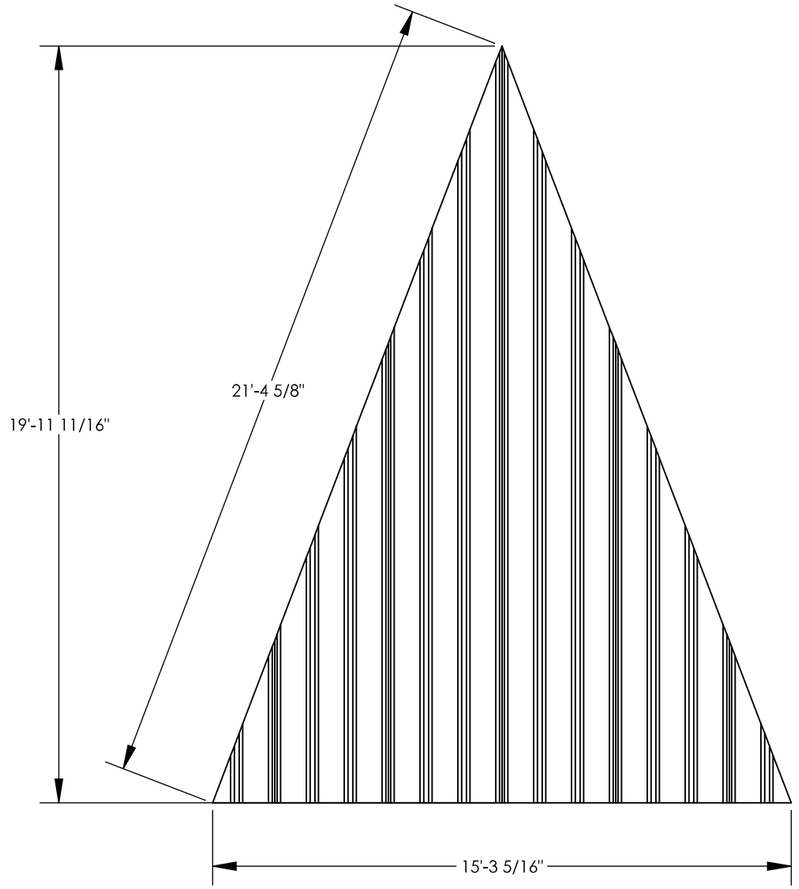

MULTI-RIB NOTES:

1. THE DETAILS SHOWN ARE SUGGESTIONS OR GUIDELINES ON HOW TO ERECT THE SYSTEMS. THE INFORMATION SHOWN IS ACCURATE, BUT IT IS NOT INTENDED TO COVER ALL INSTANCES, BUILDING REQUIREMENTS, DESIGNS OR CODES. THE DETAILS MAY REQUIRE CHANGES OR REVISIONS DUE TO FIELD CONDITIONS.

2. IT SHALL BE THE RESPONSIBILITY OF THE ERECTOR TO ENSURE THAT THE DETAILS MEET PARTICULAR BUILDING REQUIREMENTS AND TO ASSURE ADEQUATE WATER TIGHTNESS.

3. THE ERECTOR SHOULD THOROUGHLY FAMILIARIZE HIMSELF/HERSELF WITH ALL ERECTION INSTRUCTIONS BEFORE STARTING WORK.

4. THE PANELS SHOULD BE INSTALLED PLUMB, STRAIGHT, AND ACCURATELY TO THE ADJACENT WORK.

5. FLASHING AND TRIM SHALL BE INSTALLED TRUE, AND IN PROPER ALIGNMENT, WITH ANY EXPOSED FASTENERS EQUALLY SPACED FOR THE BEST APPEARANCE.

6. SEALANT SHALL BE FIELD APPLIED ON DRY, CLEAN SURFACES. SOME FIELD CUTTING AND FITTING OF PANELS AND FLASHING IS TO BE EXPECTED BY THE ERECTOR AND MINOR FIELD CORRECTIONS ARE A PART OF NORMAL ERECTION WORK.

7. WORKMANSHIP SHALL BE OF THE BEST INDUSTRY STANDARDS AND INSTALLATION SHALL BE PERFORMED BY EXPERIENCED METAL CRAFTSMEN.

8. METAL SHAVINGS FROM DRILLING OR INSTALLATION OF ROOF FASTENERS MUST BE CAREFULLY REMOVED FROM THE ROOF BY BRUSHING OR SWEEPING AT THE END OF EACH DAY DURING INSTALLATION. SHAVINGS LEFT ON THE ROOF WILL QUICKLY RUST AND STAIN THE ROOF FINISH.

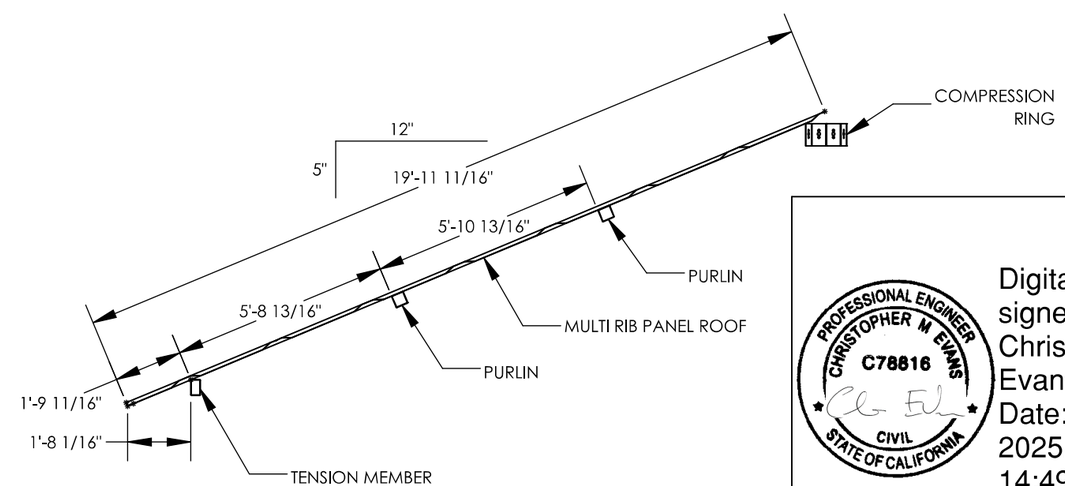

PROFESSIONAL ENGINEER
CHRISTOPHER M EVANS
C78816
CIVIL
STATE OF CALIFORNIA

Digitally signed by Christopher Evans
Date: 2025.04.11 14:49:57-04'00'

IF THESE DRAWINGS ARE SEALED, THE SEAL APPLIES ONLY TO BUILDING COMPONENTS DETAILED WITHIN THESE DRAWINGS AND SUPPLIED BY PORTER CORP AS WELL AS THE FOUNDATION DESIGN, IF APPLICABLE.

poligon® by PORTER CORP
WWW.POLIGON.COM
MAIN: (616) 888-3500
FIELD SUPPORT: (616) 888-3504

PRINT DATE: 4/9/2025
SCALE: 1:48
DRAWN BY: anastasia.castle
REV LEVEL: A
CREATION DATE: 11/15/2016
ORDER NO: 82395
CAD MODEL: ~P21521

PROJECT: SIERRA CREEK PARK 2
PROJECT LOCATION: ANTELOPE, CA
DRAWING: ROOF LAYOUT

SHEET
6.1

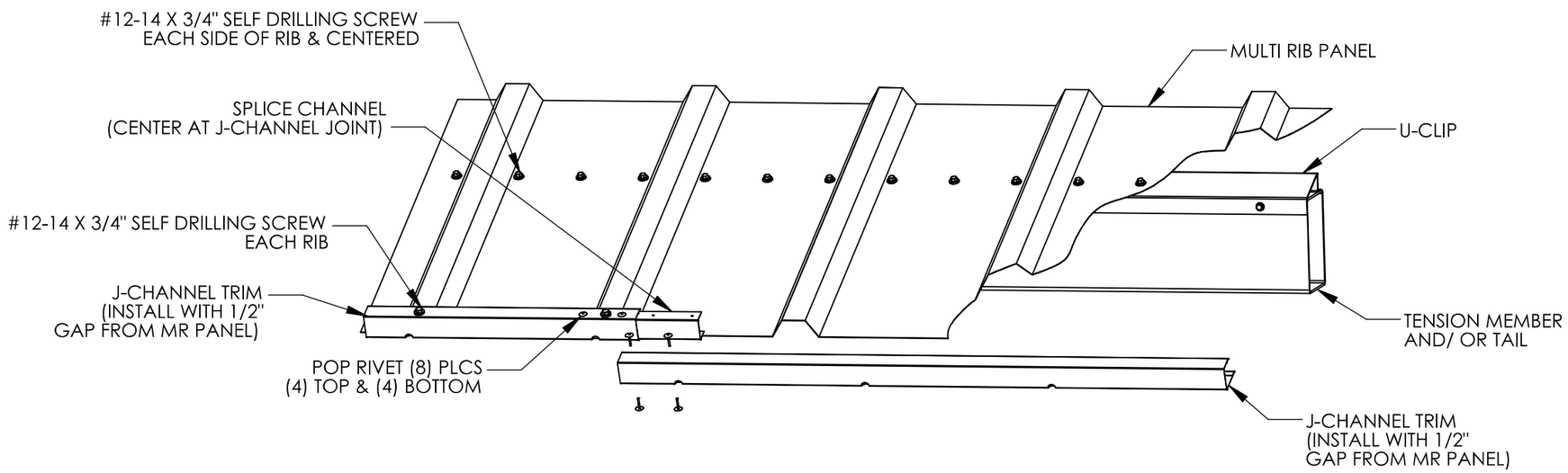

2024A

EAVE DETAIL

MR-100

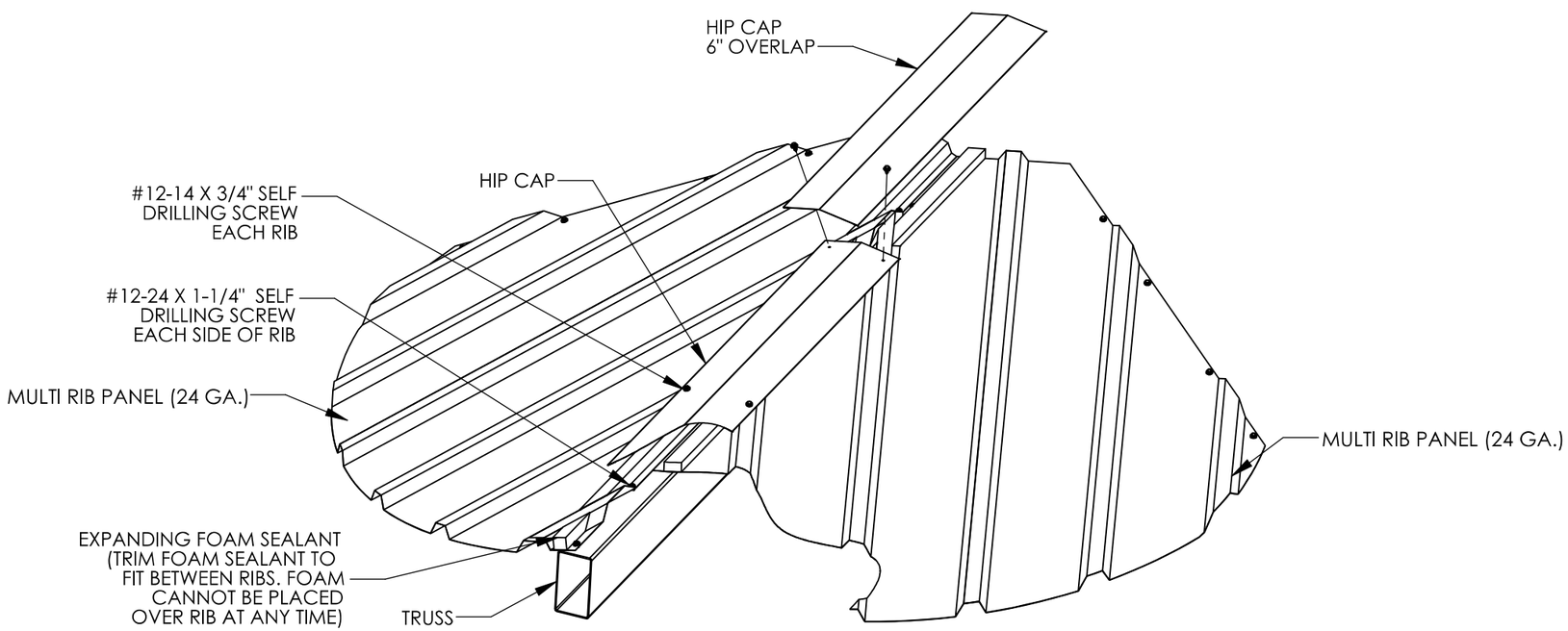

2023A

TRUSS DETAIL

MR-300

PART DESCRIPTIONS:

#12-14x3/4" SELF DRILLING SCREW.

#12-24x1 1/4" SELF DRILLING SCREW.

1/8" POP RIVET.

PROFESSIONAL ENGINEER
CHRISTOPHER M EVANS
C78816
CIVIL
STATE OF CALIFORNIA

Digitally signed by Christopher Evans
Date: 2025.04.11 14:50:00-04'00'

IF THESE DRAWINGS ARE SEALED, THE SEAL APPLIES ONLY TO BUILDING COMPONENTS DETAILED WITHIN THESE DRAWINGS AND SUPPLIED BY PORTER CORP AS WELL AS THE FOUNDATION DESIGN, IF APPLICABLE.

poligon® by PORTER CORP
WWW.POLIGON.COM
MAIN: (616) 888-3500
FIELD SUPPORT: (616) 888-3504

PRINT DATE: 4/9/2025
SCALE: NTS
DRAWN BY: anastasia.castle
REV LEVEL: A
CREATION DATE: 11/15/2016
ORDER NO: 82395
CAD MODEL: ~P21521

PROJECT: SIERRA CREEK PARK 2
PROJECT LOCATION: ANTELOPE, CA
DRAWING: ROOF CONNECTION DETAILS

SHEET
7

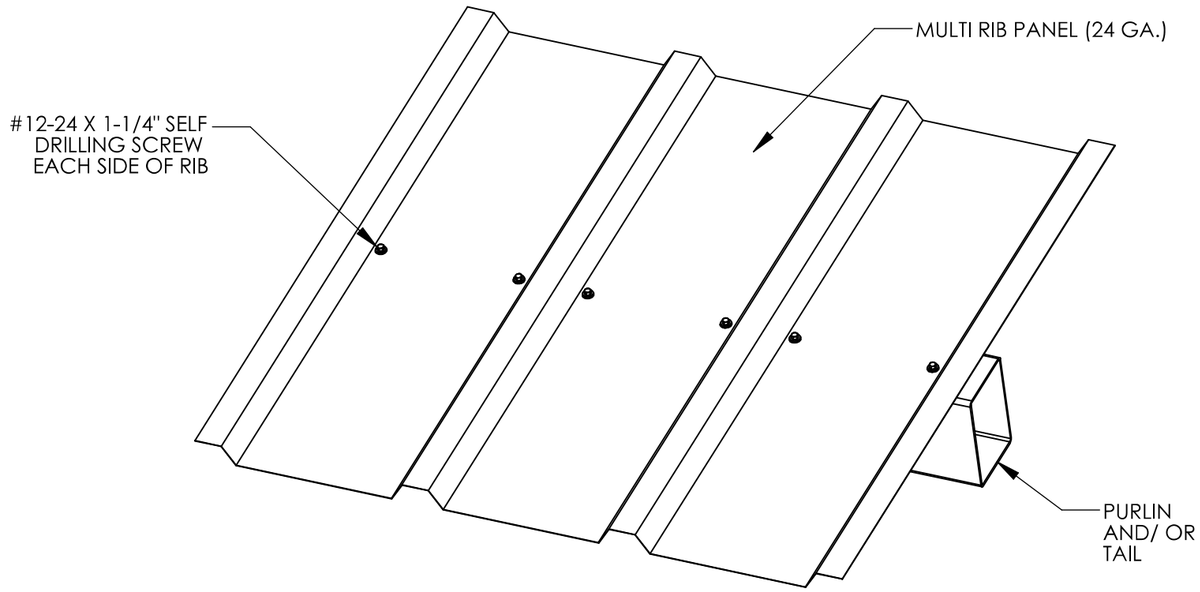

2022A | PURLIN DETAIL | MR-600

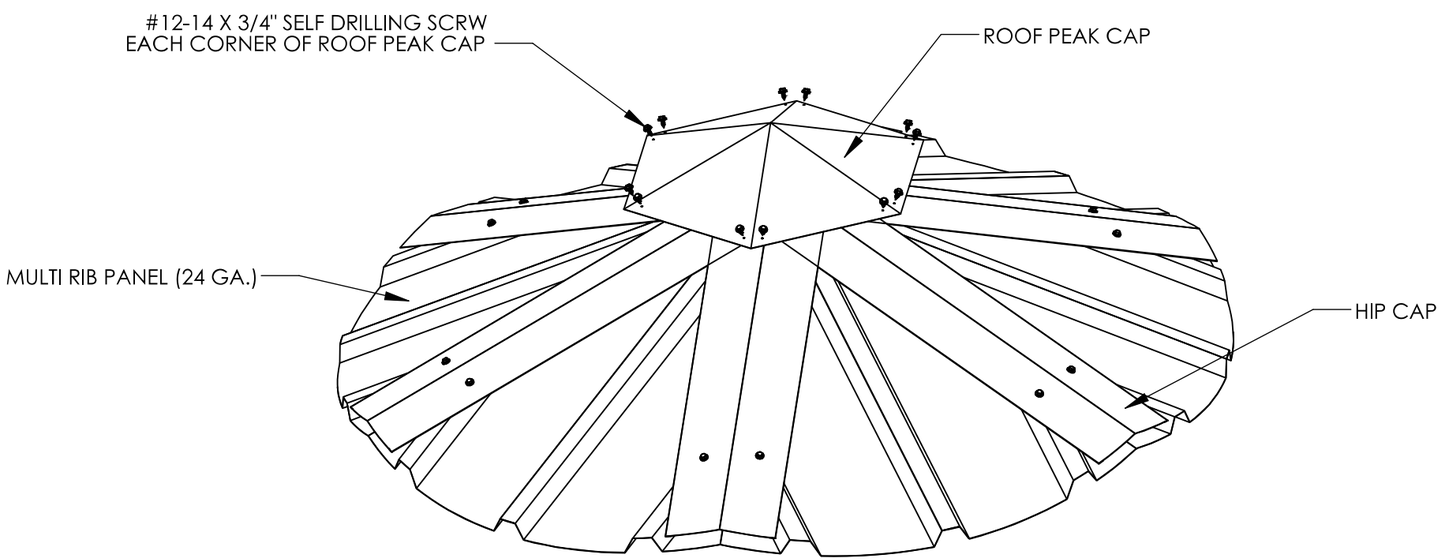

2022A | ROOF PEAK DETAIL | MR-800

PROFESSIONAL ENGINEER CHRISTOPHER M EVANS C78816 CIVIL STATE OF CALIFORNIA

Digitally signed by Christopher Evans
Date: 2025.04.11 14:50:03-04'00'

IF THESE DRAWINGS ARE SEALED, THE SEAL APPLIES ONLY TO BUILDING COMPONENTS DETAILED WITHIN THESE DRAWINGS AND SUPPLIED BY PORTER CORP AS WELL AS THE FOUNDATION DESIGN, IF APPLICABLE.

poligon® by PORTER CORP
WWW.POLIGON.COM
MAIN: (616) 888-3500
FIELD SUPPORT: (616) 888-3504

PRINT DATE: 4/9/2025
SCALE: NTS
DRAWN BY: anastasia.castle
REV LEVEL: A
CREATION DATE: 11/15/2016
ORDER NO: 82395
CAD MODEL: ~P21521

PROJECT: SIERRA CREEK PARK 2
PROJECT LOCATION: ANTELOPE, CA
DRAWING: ROOF CONNECTION DETAILS

SHEET
7.1

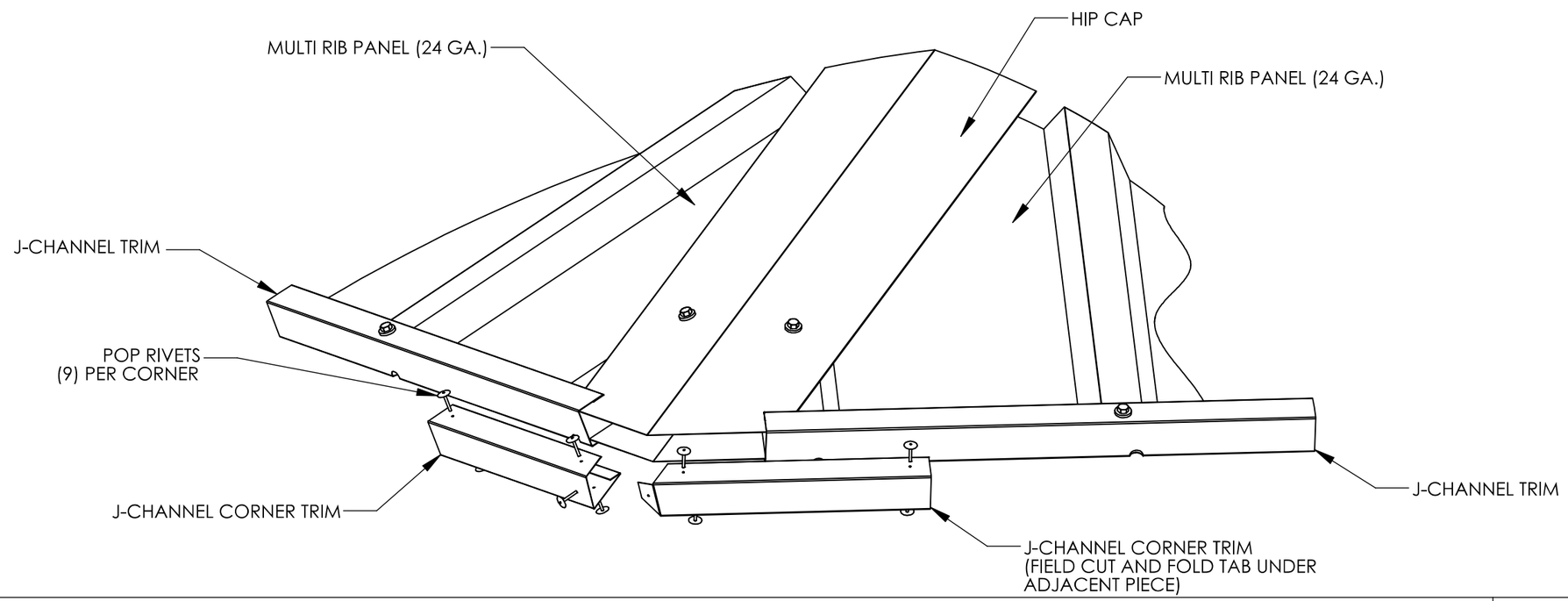

2022A

CORNER DETAIL

MR-900

Digitally signed by Christopher Evans
Date: 2025.04.11 14:50:07-04'00'

PROFESSIONAL ENGINEER
CHRISTOPHER M EVANS
C78816
CIVIL
STATE OF CALIFORNIA

IF THESE DRAWINGS ARE SEALED, THE SEAL APPLIES ONLY TO BUILDING COMPONENTS DETAILED WITHIN THESE DRAWINGS AND SUPPLIED BY PORTER CORP AS WELL AS THE FOUNDATION DESIGN, IF APPLICABLE.

poligon® by PORTER CORP
WWW.POLIGON.COM
MAIN: (616) 888-3500
FIELD SUPPORT: (616) 888-3504

PRINT DATE: 4/9/2025
SCALE: NTS
DRAWN BY: anastasia.castle
REV LEVEL: A
CREATION DATE: 11/15/2016
ORDER NO: 82395
CAD MODEL: ~P21521

PROJECT: SIERRA CREEK PARK 2
PROJECT LOCATION: ANTELOPE, CA
DRAWING: ROOF CONNECTION DETAILS

SHEET
7.2

poligon®

A Division of PORTERCORP 4240 N. 136th AVE HOLLAND, MI 49424 (616) 888-3500

PROJECT NAME: SIERRA CREEK 3

PROJECT LOCATION: ANTELOPE, CA

BUILDING TYPE: RAM 12X22

ROOF TYPE: MULTI-RIB

BUILDING NUMBER: P21522

ORDER NUMBER: 82396

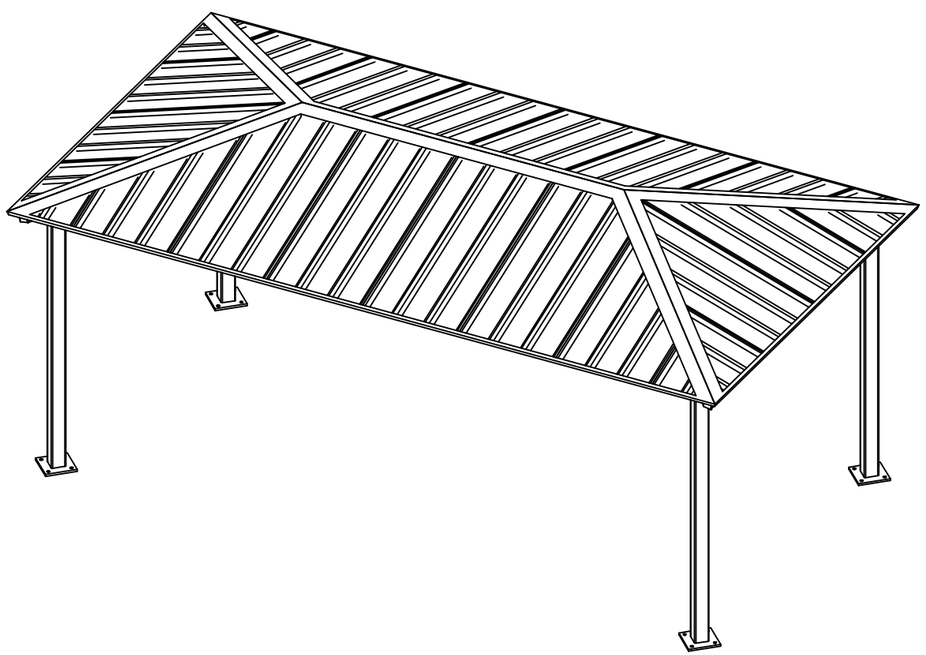

DRAWING LIST:

SHEET NUMBER	DRAWING DESCRIPTION
CS	COVER SHEET
1	ARCHITECTURAL ELEVATIONS
2-2.1	ANCHOR AND FOOTING LAYOUT / DETAILS
3	STRUCTURAL FRAMING PLAN
4-4.1	FRAME CONNECTION DETAILS
5	ELECTRICAL VIEWS - N/A
6-6.2	ROOF LAYOUT
7-7.1	ROOF CONNECTION DETAILS

MANUFACTURER NOTES:

MATERIALS:

DESCRIPTION	ASTM DESIGNATION
TUBE STEEL	A500 (GRADE C)
SCHEDULE PIPE	A53 (GRADE B)
RMT PIPE	A519
LIGHT GAGE COLD FORMED	A1003 (GRADE 50)
STRUCTURAL STEEL PLATE	A36
ROOF PANELS (STEEL)	A653
ANCHOR BOLTS	SEE SHEET 2.1

GENERAL NOTES:

1. PORTER CORP IS RESPONSIBLE ONLY FOR THE STRUCTURAL DESIGN OF THE STEEL STRUCTURE (AND FOUNDATION DESIGN IF APPLICABLE) IT SELLS TO THE BUILDER. PORTER CORP OR THEIR ENGINEER IS NOT THE DESIGN PROFESSIONAL OR ENGINEER OF RECORD FOR THE CONSTRUCTION PROJECT. PORTER CORP IS NOT RESPONSIBLE FOR THE DESIGN OF ANY COMPONENTS OR MATERIALS NOT SOLD BY IT OR THEIR INTERFACE AND CONNECTION WITH THE STEEL STRUCTURE.
2. UNLESS NOTED OTHERWISE, THIS STRUCTURE WAS DESIGNED TO ONLY SUPPORT WHAT IS SHOWN ON THESE DRAWINGS. POLIGON MUST BE CONTACTED IF ANYTHING ELSE IS TO BE ATTACHED TO THIS STRUCTURE (WALLS, COLUMN WRAPS, RAILINGS, ETC.) SO THE DESIGN OF THIS STRUCTURE CAN BE REVIEWED AND POSSIBLY REVISED.
3. THE ENGINEERING SEAL FOR THE STRUCTURE DETAILED IN THESE DRAWINGS IS ONLY VALID IF PORTER CORP DESIGNS AND FABRICATES THE STEEL COMPONENTS. FABRICATING THE STEEL COMPONENTS ELSEWHERE VOIDS THE ENGINEERING PROVIDED BY PORTER CORP.
4. UNLESS NOTED OTHERWISE, THIS STRUCTURE WAS DESIGNED ASSUMING A 20' SEPARATION BETWEEN ANY ADJACENT STRUCTURE WITH AN EAVE HEIGHT EQUAL TO OR GREATER THAN THE EAVE HEIGHT OF THIS STRUCTURE (SEE SNOW DESIGN DATA). IF THAT SEPARATION DOES NOT EXIST AND THE GROUND SNOW LOAD (PG) IS GREATER THAN 0 PSF, POLIGON MUST BE CONTACTED SO THE DESIGN OF THIS STRUCTURE CAN BE REVIEWED AND POSSIBLY REVISED.
5. STRUCTURAL STEEL SHALL BE DETAILED, FABRICATED, AND ERECTED IN ACCORDANCE WITH THE AMERICAN INSTITUTE OF STEEL CONSTRUCTION (AISC) SPECIFICATION MANUAL REFERENCED IN THE GOVERNING BUILDING CODE.
6. ALL WELDING IS PERFORMED BY AMERICAN WELDING SOCIETY (AWS) CERTIFIED WELDERS AND CONFORMS TO AWS D1.1 OR D1.3 AS REQUIRED.
7. PARTS SHOWN MAY BE UPGRADED DUE TO STANDARDIZED FABRICATION. REFER TO THE SHIPPING BILL OF MATERIALS AND FINAL INSTALLATION INSTRUCTIONS INCLUDED WITH THE STRUCTURE FOR POSSIBLE SUBSTITUTIONS AND IMPROVEMENTS.
8. FOR PROPER FIELD INSTALLATION OF THE BUILDING IT IS RECOMMENDED THAT THE PRIMARY FRAME INSTALLER AND THE ROOF INSTALLER HAVE A MINIMUM FIVE (5) YEARS DOCUMENTED EXPERIENCE INSTALLING THIS TYPE OF PRODUCT.
9. THE DRAWINGS REPRESENT THE FINISHED STRUCTURE. THE CONTRACTOR SHALL SUPERVISE AND DIRECT THE WORK, AND SHALL BE SOLELY RESPONSIBLE FOR CONSTRUCTION MEANS, TECHNIQUES, SEQUENCES AND PROCEDURES, INCLUDING BRACING, SHORING, LAYDOWN AND PROTECTION OF CONSTRUCTION MATERIALS, ETC. TEMPORARY SHORING AND BRACING SHALL BE THE RESPONSIBILITY OF THE CONTRACTOR.
10. FOR PROPER FIELD INSTALLATION OF THE BUILDING IT IS RECOMMENDED THAT ELECTRIC WIRING, IF REQUIRED, BE RUN THROUGH THE STRUCTURAL MEMBERS BEFORE THE BUILDING IS ERECTED.
11. MAKING HOLES, CUTS OR MODIFICATIONS TO THE STRUCTURAL STEEL MEMBERS IS NOT PERMITTED IN THE FIELD WITHOUT SPECIFIC APPROVAL OF POLIGON.

CERTIFICATES:
MIAMI-DADE COUNTY CERTIFICATE OF COMPETENCY NO. 24-0903.04
PCI (POWDER COATING INSTITUTE) 4000 CERTIFIED

FABRICATOR APPROVALS:
CITY OF PHOENIX, AZ APPROVED FABRICATOR #C08-2010
CITY OF LOS ANGELES, CA APPROVED FABRICATOR #FB01596
CITY OF RIVERSIDE, CA APPROVED FABRICATOR #SF_000042
CITY OF HOUSTON, TX APPROVED FABRICATOR #470
CLARK COUNTY, NV APPROVED FABRICATOR #264
STATE OF UTAH APPROVED FABRICATOR 02008-14
AISC APPROVED FABRICATOR C-00024530
AWS CERTIFIED WELDING FABRICATOR #240707F

AMERICAN INSTITUTE OF STEEL CONSTRUCTION AISC FOUNDED 1921

DESIGN CRITERIA:

GENERAL:
2022 CALIFORNIA BUILDING CODE
RISK CATEGORY: II

DEAD LOAD:
ROOF DEAD LOAD: 2 PSF
FRAME DEAD LOAD: SELF WEIGHT

LIVE LOAD:
ROOF LIVE LOAD: 20 PSF

SNOW DESIGN DATA:
GROUND SNOW LOAD (Pg): 0 PSF
FLAT ROOF SNOW LOAD (Pf): 0 PSF
SNOW EXPOSURE FACTOR (Ce): 1.0
SNOW LOAD IMPORTANCE FACTOR (Is): 1.0
THERMAL FACTOR (Ct): 1.2
ROOF SLOPE FACTOR (Cs): 1.0
DRIFT SURCHARGE LOAD (Pd): 0 PSF
WIDTH OF SNOW DRIFT (w): 0 FT
MINIMUM HORIZONTAL SEPARATION DISTANCE (s): 20 FT

WIND DESIGN DATA:
BASIC WIND SPEED (V): 95 MPH
ALLOWABLE STRESS DESIGN WIND SPEED (Vasd): 74 MPH
GUST EFFECT FACTOR (G): 0.85
INTERNAL PRESSURE COEFFICIENT (GCpi): 0
WIND EXPOSURE: C

SEISMIC DESIGN DATA:
STEEL ORDINARY CANTILEVER
COLUMN SYSTEMS
SEISMIC IMPORTANCE FACTOR (Ie): 1.0
SEISMIC DESIGN CATEGORY: D
SEISMIC SITE CLASS: D DEFAULT
SHORT SPECTRAL RESPONSE (Ss): 0.48
1-SEC SPECTRAL RESPONSE (S1): 0.23
DESIGN SHORT SPECTRAL RESPONSE (SDS): 0.45
DESIGN 1-SEC SPECTRAL RESPONSE (SD1): 0.49
SEISMIC RESPONSE COEFFICIENT (Cs): 0.36
RESPONSE MODIFICATION COEFFICIENT (R): 1.25
EQUIVALENT LATERAL FORCE PROCEDURE
SEE CALCULATIONS FOR ADDITIONAL DATA

ADDITIONAL CRITERIA:
NONE

PROFESSIONAL ENGINEER CHRISTOPHER M EVANS C78816 CIVIL STATE OF CALIFORNIA

Digitally signed by Christopher Evans
Date: 2025.04.11 14:52:14-04'00'

IF THESE DRAWINGS ARE SEALED, THE SEAL APPLIES ONLY TO BUILDING COMPONENTS DETAILED WITHIN THESE DRAWINGS AND SUPPLIED BY PORTER CORP AS WELL AS THE FOUNDATION DESIGN, IF APPLICABLE.

poligon® WWW.POLIGON.COM MAIN: (616) 888-3500 FIELD SUPPORT: (616) 888-3504 by PORTER CORP

PRINT DATE: 4/9/2025
SCALE: 1:50
DRAWN BY: anastasia.castle
REV LEVEL: A
CREATION DATE: 11/16/2016
ORDER NO: 82396
CAD MODEL: ~BLDG-P21522

PROJECT: SIERRA CREEK 3
PROJECT LOCATION: ANTELOPE, CA
DRAWING: COVER SHEET

SHEET
CS

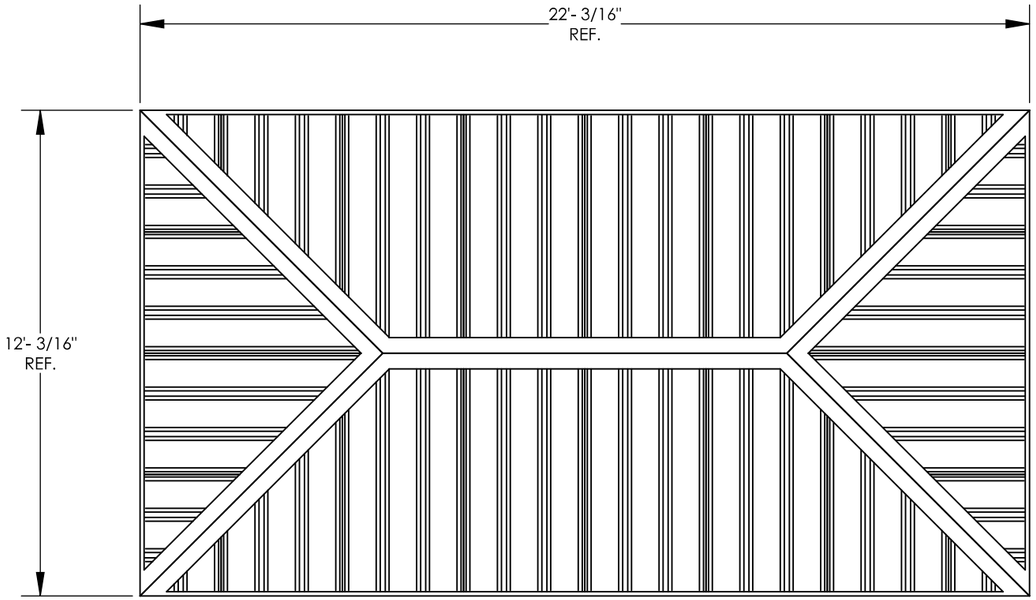

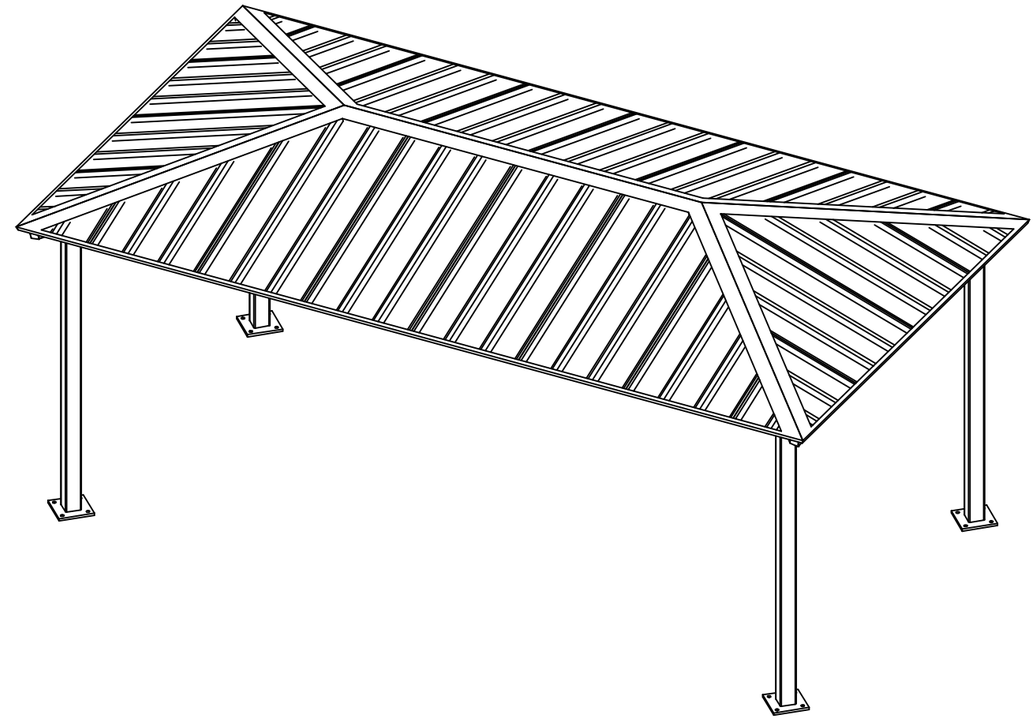

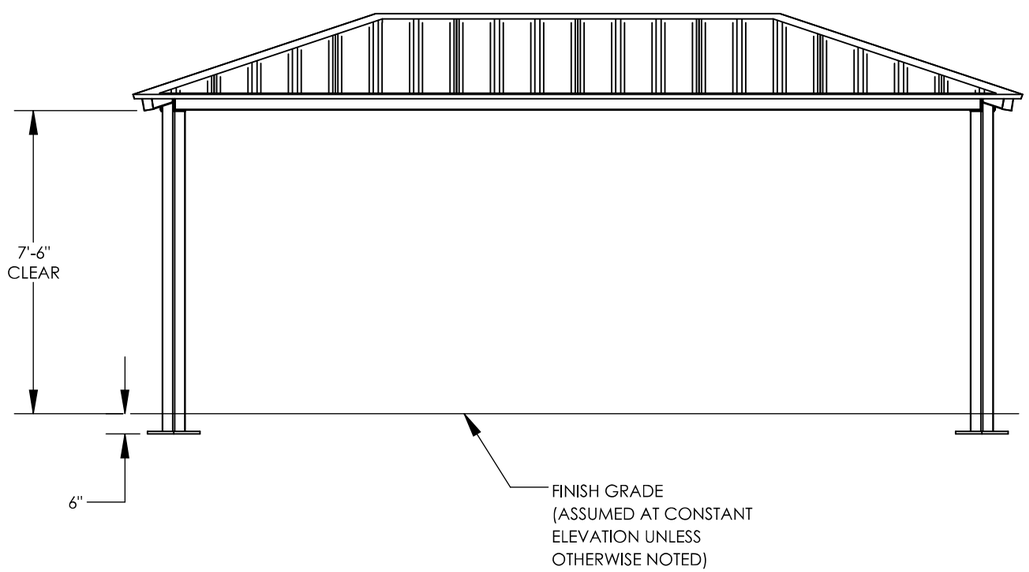

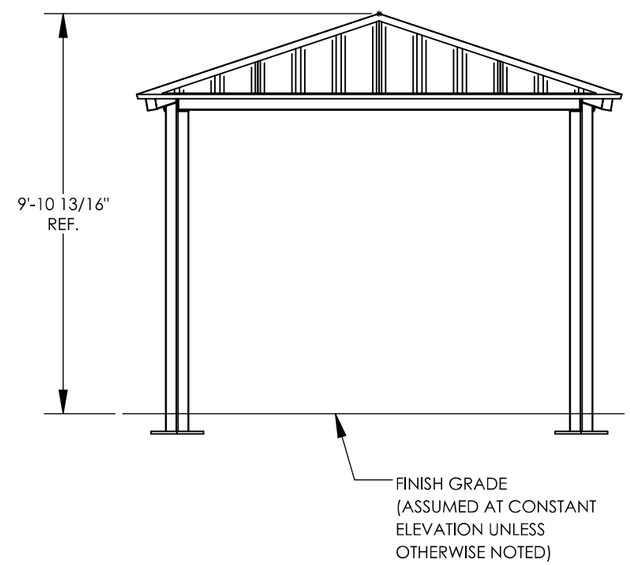

PROFESSIONAL ENGINEER
CHRISTOPHER M EVANS
C78816
CIVIL
STATE OF CALIFORNIA

Digitally signed by Christopher Evans
Date: 2025.04.11 14:52:17-04'00'

IF THESE DRAWINGS ARE SEALED, THE SEAL APPLIES ONLY TO BUILDING COMPONENTS DETAILED WITHIN THESE DRAWINGS AND SUPPLIED BY PORTER CORP AS WELL AS THE FOUNDATION DESIGN, IF APPLICABLE.

poligon® by PORTER CORP
WWW.POLIGON.COM
MAIN: (616) 888-3500
FIELD SUPPORT: (616) 888-3504

CREATION DATE: 11/16/2016	DRAWN BY: anastasia.castle
ORDER NO: 82396	REV LEVEL: A
CAD MODEL: ~BLDG-P21522	
PRINT DATE: 4/9/2025	SCALE: 1:45

PROJECT: SIERRA CREEK 3
PROJECT LOCATION: ANTELOPE, CA
DRAWING: ARCHITECTURAL ELEVATIONS

SHEET
1

ANCHOR AND FOOTING LAYOUT NOTES:

1. ANCHORS MUST BE CENTERED IN FOOTINGS
2. FOOTINGS MUST BE TURNED TO ALIGN WITH COLUMN AND TRUSS CENTERLINE.

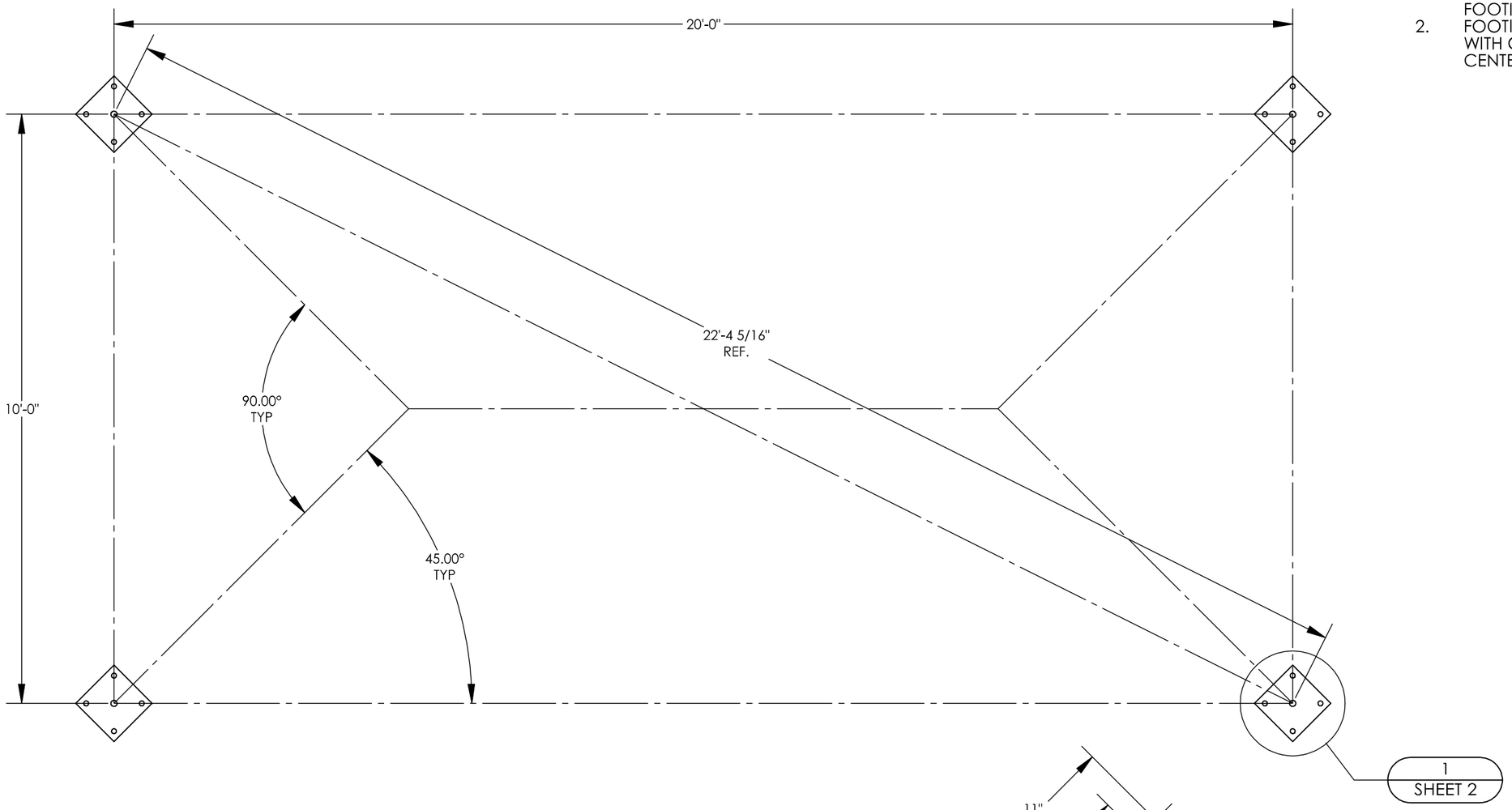

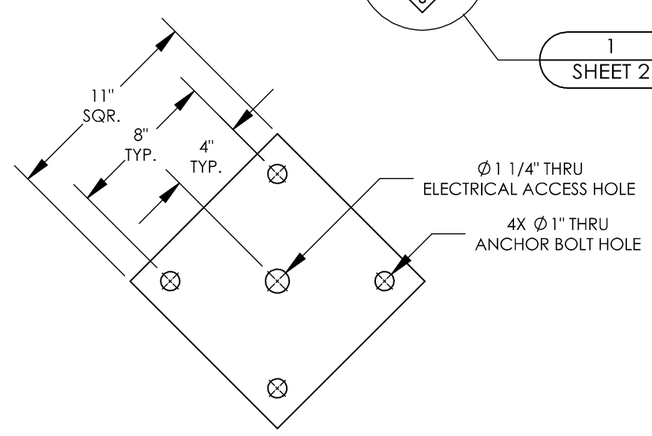

1/2 ANCHOR BOLT PATTERN
BASE PLATE THICKNESS: 3/4"

PROFESSIONAL ENGINEER
CHRISTOPHER M EVANS
C78816
CIVIL
STATE OF CALIFORNIA

Digitally signed by Christopher Evans
Date: 2025.04.11 14:52:21-04'00'

IF THESE DRAWINGS ARE SEALED, THE SEAL APPLIES ONLY TO BUILDING COMPONENTS DETAILED WITHIN THESE DRAWINGS AND SUPPLIED BY PORTER CORP AS WELL AS THE FOUNDATION DESIGN, IF APPLICABLE.

poligon® by PORTER CORP
WWW.POLIGON.COM
MAIN: (616) 888-3500
FIELD SUPPORT: (616) 888-3504

PRINT DATE:	4/9/2025
SCALE:	1:25
DRAWN BY:	anastasia.castle
REV LEVEL:	A
CREATION DATE:	11/16/2016
ORDER NO:	82396
CAD MODEL:	~BLDG-P21522
PROJECT:	SIERRA CREEK 3
PROJECT LOCATION:	ANTELOPE, CA
DRAWING:	ANCHOR AND FOOTING LAYOUT
SHEET	2

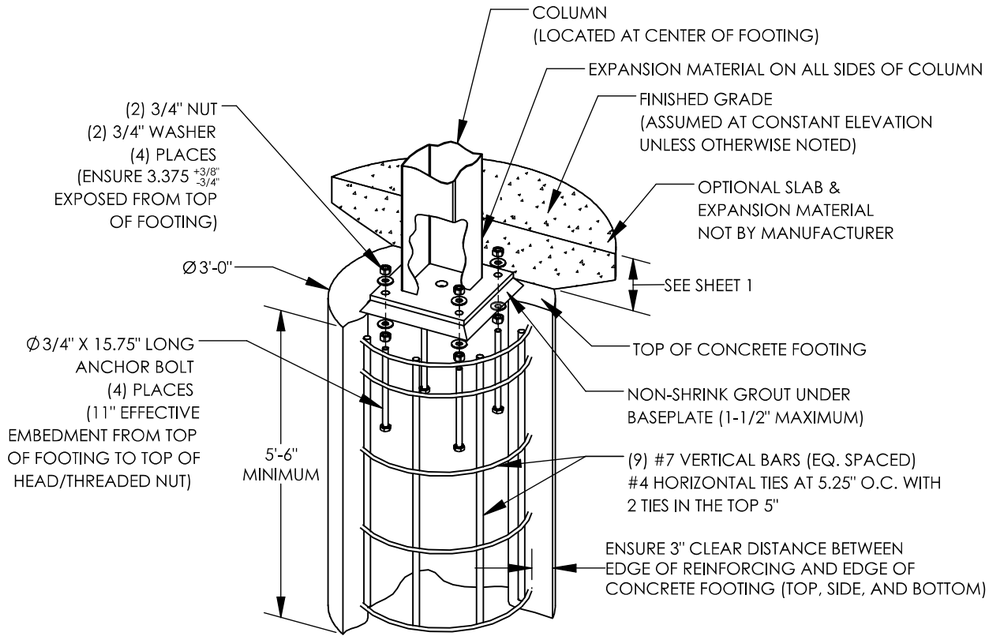

PIER FOOTING OPTION (EXTERNAL ANCHOR BOLTS)

FOOTING DESIGN BY MANUFACTURER, FOOTING MATERIALS BY OTHERS.
(TYPICAL WITH EACH COLUMN, QTY OF REINFORCING AND ANCHOR BOLTS
SPECIFIED IN NOTES REFLECT SITE SPECIFIC REQUIREMENTS)

ANCHOR BOLT NOTES - EXTERNAL (ANCHOR BOLTS LOCATED OUTSIDE COLUMN):

1. ANCHOR RODS TO BE ASTM F1554 GRADE 55 TYPE S1 WITH "UNC" CLASS 2A THREADS, HEAVY HEX NUTS AND STANDARD CUT WASHERS, UNLESS OTHERWISE NOTED.
2. ANCHOR BOLTS SHALL BE EITHER "HEADED" OR "THREADED WITH NUT" AS DEFINED IN THE AMERICAN INSTITUTE OF STEEL CONSTRUCTION MANUAL.
3. HOOKED ANCHOR BOLTS ARE NOT ACCEPTABLE.
4. ACCURATE ANCHOR BOLT PLACEMENT IS CRITICAL. TO ENSURE THE ANCHOR BOLT LAYOUT MEETS THE DIMENSIONS REQUIRED ON THE DRAWINGS, SURVEY (OR MEASURE) THE LOCATION OF ALL ANCHOR BOLTS PRIOR TO POURING THE FOOTINGS. AN ADDITIONAL SURVEY (OR MEASUREMENT) SHOULD BE MADE AFTER THE FOOTINGS ARE POURED TO CONFIRM THE ANCHOR BOLTS DID NOT SHIFT DURING THE CONCRETE POUR.
5. THE MANUFACTURER STRONGLY RECOMMENDS USING ANCHOR BOLT TEMPLATES BECAUSE THEY SIGNIFICANTLY IMPROVE THE ACCURACY OF ANCHOR BOLT PLACEMENT. AN ANCHOR BOLT TEMPLATE IS PROVIDED WITH ANY ANCHOR BOLT KIT PURCHASED.
6. IF OUTSIDE CONSULTING ENGINEERS ARE DESIGNING THE FOUNDATIONS FOR THIS STRUCTURE, THEY MUST REFER TO THE MANUFACTURER'S CALCULATIONS FOR MINIMUM CONCRETE PROPERTIES (COMPRESSIVE STRENGTH, EDGE DISTANCE, ETC.) REQUIRED FOR THE ANCHOR BOLT DESIGN.
7. ELECTRICAL ACCESS HOLE IS ALWAYS LOCATED IN THE COLUMN BASE PLATE AS SHOWN. TEMPLATE MUST BE REMOVED BEFORE INSTALLING COLUMNS.
8. GROUT UNDER BASEPLATES SHALL BE NON-METALLIC, NON-SHRINK GROUT WITH MINIMUM f'c=6500 PSI.
9. THE CALCULATIONS FOR THIS STRUCTURE ASSUME A FIXED COLUMN BASE.
10. THE FOLLOWING ADHESIVE ANCHORS MAY BE SUBSTITUTED FOR THE CAST-IN-PLACE ANCHOR BOLTS:
    -HILTI HIT-HY 200 (A OR R) V3 ADHESIVE WITH Ø 3/4" HAS-E ROD WITH 11" EFFECTIVE EMBEDMENT.
    CONTRACTOR SHALL FOLLOW ALL INSTALLATION SPECIFICATIONS AND REQUIREMENTS OF ANCHOR MANUFACTURER.

CONCRETE NOTES:

1. ALL CONCRETE CONSTRUCTION SHALL CONFORM TO THE CURRENT "ACI MANUAL OF CONCRETE PRACTICE".
2. PORTLAND CEMENT SHALL CONFORM TO ASTM C-150 TYPE II OR TYPE V.
3. IT IS THE CONTRACTOR'S RESPONSIBILITY TO VERIFY THE CONCRETE MIX DESIGN MEETS THE "ACI MANUAL OF CONCRETE PRACTICE" REQUIREMENTS FOR CONCRETE BY EXPOSURE CLASS.
4. THE USE OF CHLORIDE ACCELERATORS IS NOT PERMITTED.
5. COARSE AGGREGATE SHALL BE #57 OR LARGER.
6. CONCRETE AT PLACEMENT SHALL HAVE A SLUMP OF 4" +/- 1".
7. MINIMUM CONCRETE COMPRESSIVE STRENTGH AT 28 DAYS: 4500 PSI.
8. REINFORCING STEEL SHALL BE DEFORMED STEEL CONFORMING TO THE REQUIREMENTS OF ASTM A615 (DEFORMATIONS SHALL BE IN ACCORDANCE WITH ASTM A305) AS FOLLOWS:
   GRADE 60: #4 BARS AND LARGER
   GRADE 40: #3 BARS
9. PRIOR TO PLACING OF CONCRETE, REINFORCING STEEL AND EMBEDDED ITEMS SHALL BE WELL SECURED IN POSITION.
10. MAINTAIN 3" CONCRETE COVERAGE TO FACE OF BARS UNLESS OTHERWISE NOTED.
11. BARS SHALL BE CLEAN OF RUST, GREASE OR OTHER MATERIAL LIKELY TO IMPAIR BOND. BENDS SHALL BE MADE COLD.
12. WELDING OF REINFORCEMENT IS NOT ALLOWED.
13. ALL EXPOSED EXTERNAL CORNER OF FOUNDATIONS TO BE CHAMFERED BY 3/4" BY 45 DEGREES UNLESS NOTED OTHERWISE.
14. ALL NEW CONCRETE SHALL BE CURED IMMEDIATELY AFTER FINISHING OF REMOVING FORMWORK. CURING SHALL BE EITHER A MOIST CURE METHOD OR THE USE OF A CURING COMPOUND.

FOUNDATION NOTES:

1. FOUNDATIONS SHALL BEAR ON COMPETENT, UNDISTURBED SOIL OR 95% COMPACTED FILL. IF SIGNS OF ORGANIC MATERIAL, UNCONTROLLED FILL, CLAY OR SILT, HIGH WATER TABLE OR OTHER POSSIBLE DETRIMENTAL CONDITIONS ARE FOUND, CONSTRUCTION OF THE FOUNDATIONS MUST BE STOPPED AND A GEOTECHNICAL ENGINEER BE CONTACTED.
2. NO FOUNDATIONS SHALL BE PLACED INTO OR ADJACENT TO SUBGRADE CONTAINING WATER, ICE, FROST, ORGANIC OR LOOSE MATERIAL.
3. WATER SHALL NOT BE PERMITTED TO ACCUMULATE IN FOUNDATION EXCAVATIONS.
4. IT IS THE CONTRACTOR'S RESPONSIBILITY TO VERIFY THE LOCAL FROST DEPTH REQUIREMENT PRIOR TO CONSTRUCTION.
5. IF FOUNDATIONS SHOWN DO NOT MEET LOCAL FROST DEPTH REQUIREMENTS, EXTEND THE DRILLED PIER FOUNDATION AS REQUIRED, EXTENDING THE VERTICAL BARS AND PROVIDING ADDITIONAL TIES TO MEET SPACING REQUIREMENTS AS SHOWN. IF FROST DEPTH REQUIREMENTS ARE NOT MET, AND NO DRILLED PIER DESIGN IS PROVIDED, CONTACT POLIGON.
6. ALLOWABLE SOIL PRESSURES (AS APPLICABLE):

DRILLED PIER	
VERTICAL BEARING	1500 PSF
LATERAL BEARING	100 PSF/FT

THE FOUNDATION DESIGN SHOWN ON THESE DRAWINGS IS NOT SITE SPECIFIC, BUT BASED ON THE PRESUMPTIVE ALLOWABLE FOUNDATION PRESSURES IN CHAPTER 18 OF THE BUILDING CODE (CLASS 5 SOIL). THE BUILDING OFFICIAL IN THE JURISDICTION IN WHICH THIS STRUCTURE IS LOCATED MAY REQUIRE A SITE SPECIFIC GEOTECHNICAL REPORT OR LETTER FROM A QUALIFIED LOCAL PROFESSIONAL ENGINEER ATTESTING TO WHETHER THE ACTUAL SITE CONDITIONS MEET THE ASSUMPTIONS IDENTIFIED ABOVE.

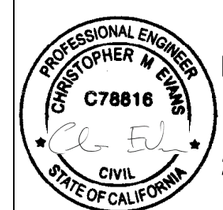

Digitally signed by Christopher Evans
Date: 2025.04.11 14:53:43-04'00'

IF THESE DRAWINGS ARE SEALED, THE SEAL APPLIES ONLY TO BUILDING COMPONENTS DETAILED WITHIN THESE DRAWINGS AND SUPPLIED BY PORTER CORP AS WELL AS THE FOUNDATION DESIGN, IF APPLICABLE.

poligon by PORTER CORP
WWW.POLIGON.COM
MAIN: (616) 888-3500
FIELD SUPPORT: (616) 888-3504

PRINT DATE: 4/9/2025
SCALE: 1:12
DRAWN BY: anastasia.castle
REV LEVEL: A
CREATION DATE: 11/16/2016
ORDER NO: 82396
CAD MODEL: ~BLDG-P21522

PROJECT: SIERRA CREEK 3
PROJECT LOCATION: ANTELOPE, CA
DRAWING: ANCHOR AND FOOTING DETAILS

SHEET
2.1

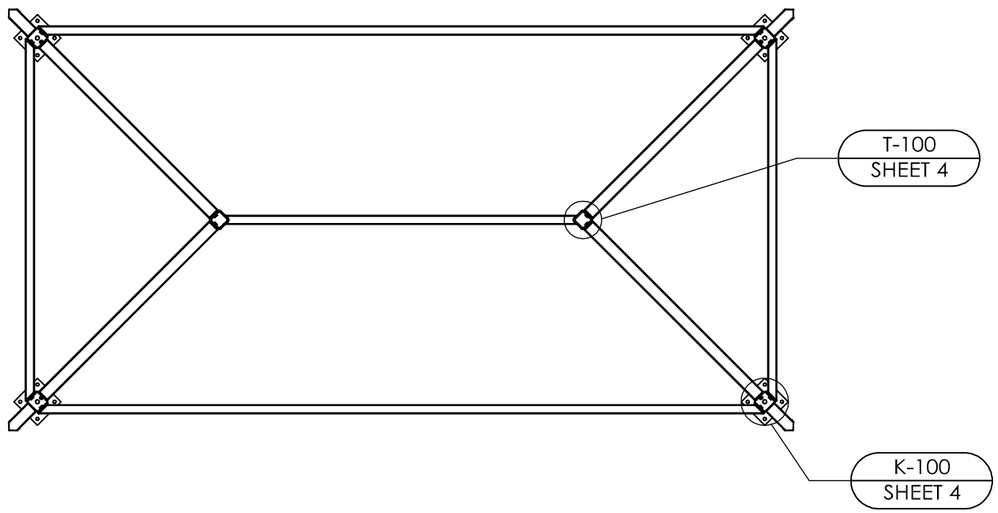

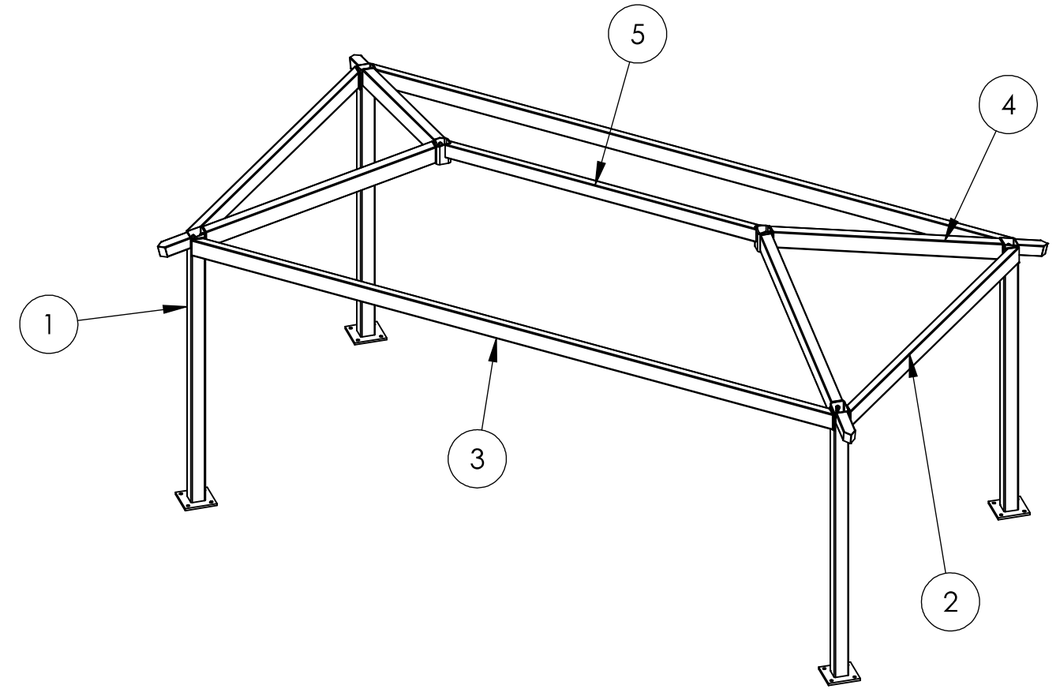

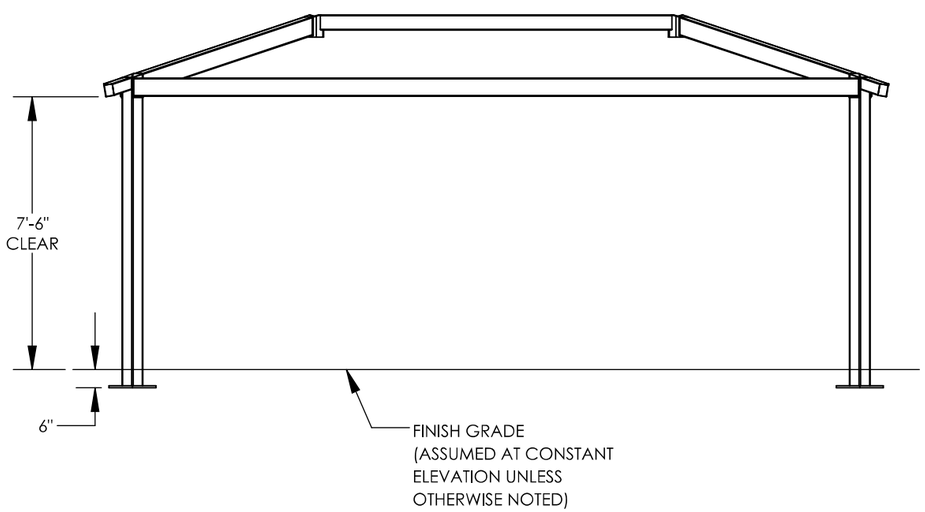

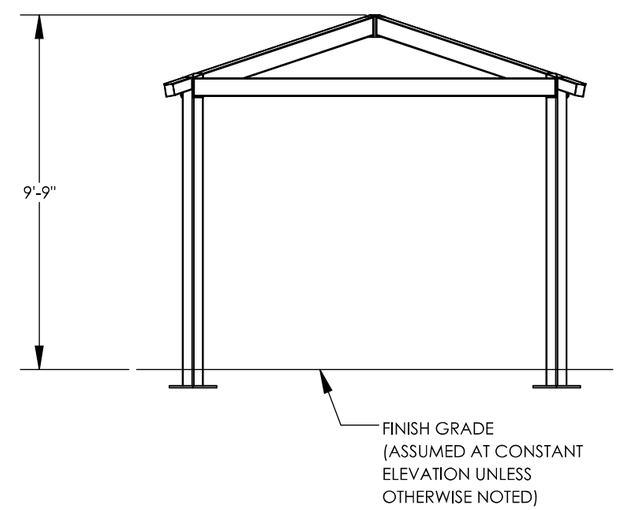

ITEM	QTY.	PART NO.	DESCRIPTION	MATERIAL SIZE	WEIGHT
5	1	-	RIDGE BEAM ASM	HSS5"X3"X1/8"	94.27
4	4	-	TRUSS 1 ASM	HSS6"X4"X1/8"	59.68
3	2	-	SIDE TENSION MEMBER 1 ASM	HSS6"X3"X1/8"	147.78
2	2	-	END TENSION MEMBER 1 ASM	HSS6"X3"X1/8"	75.17
1	4	-	COLUMN 1 ASM	HSS5"X5"X3/16"	135.09

PROFESSIONAL ENGINEER
CHRISTOPHER M EVANS
C78816
CIVIL
STATE OF CALIFORNIA

Digitally signed by Christopher Evans
Date: 2025.04.11 14:52:26-04'00'

IF THESE DRAWINGS ARE SEALED, THE SEAL APPLIES ONLY TO BUILDING COMPONENTS DETAILED WITHIN THESE DRAWINGS AND SUPPLIED BY PORTER CORP AS WELL AS THE FOUNDATION DESIGN, IF APPLICABLE.

poligon® by PORTER CORP
WWW.POLIGON.COM
MAIN: (616) 888-3500
FIELD SUPPORT: (616) 888-3504

PRINT DATE: 4/9/2025
SCALE: 1:50
DRAWN BY: anastasia.castle
REV LEVEL: A
CREATION DATE: 11/16/2016
ORDER NO: 82396
CAD MODEL: ~BLDG-P21522

PROJECT: SIERRA CREEK 3
PROJECT LOCATION: ANTELOPE, CA
DRAWING: STRUCTURAL FRAMING PLAN

SHEET
3

NOTE:
SEE UC-100 FOR U-CLIP INSTALLATION

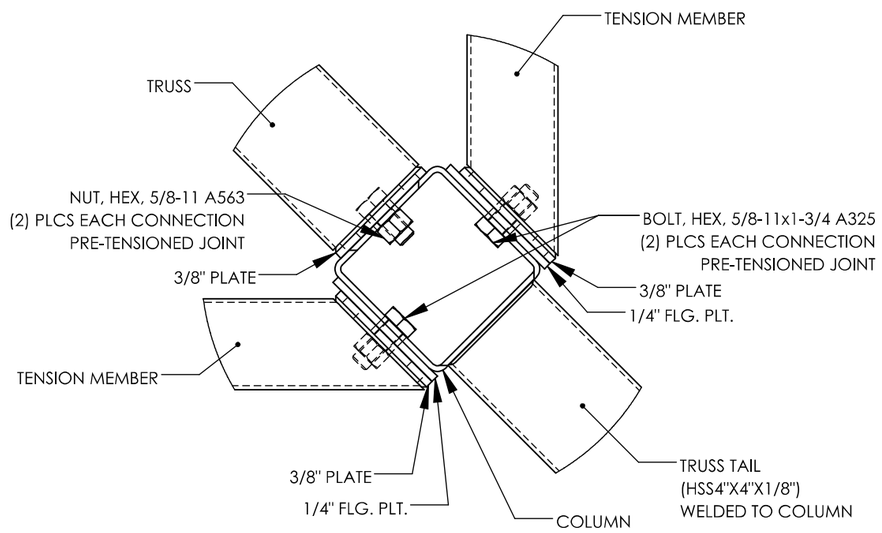

COLUMN CONNECTIONS | K-100

NOTE:
COVER PLATE (XXXXX)
W/ FASTENER (XXXXX)
ATTACHED AT BOTTOM OF CONNECTION

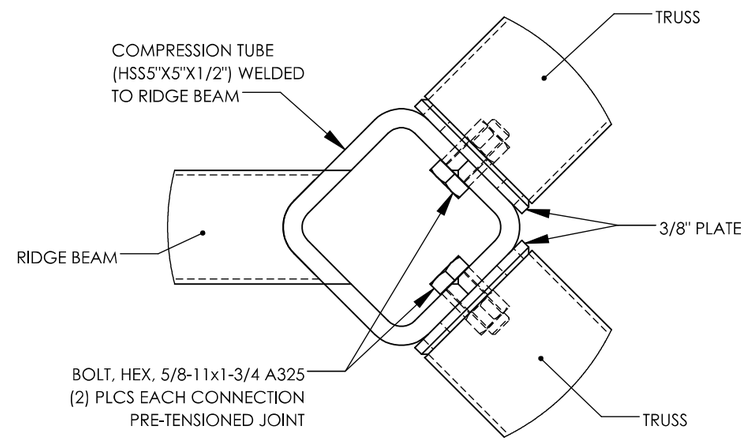

COMPRESSION MEMBER CONNECTION | T-100

TURN-OF-NUT PRETENSIONING METHOD:

THESE STEPS ILLUSTRATE THE REQUIREMENTS OUTLINED IN THE AISC SPECIFICATION. THE ROTATION INDICATED IS ACCURATE FOR MOST BOLT DIAMETERS AND LENGTHS BUT IT IS THE RESPONSIBILITY OF THE INSTALLER TO MEET AISC REQUIREMENTS.

STEP ONE:

AFTER SNUG TIGHT, MATCH MARK PLATE

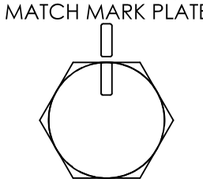

STEP TWO:

THEN TURN BOLT/NUT PAST SNUG TIGHT 1/3 TURN

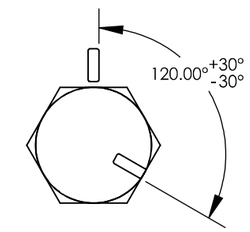

CONNECTION NOTES:

1. HIGH STRENGTH BOLTS SHALL BE ASTM F3125 (A325, TYPE 1) MATERIAL.
2. HIGH STRENGTH NUTS SHALL BE ASTM A563 (GRADE DH) MATERIAL.
3. HIGH STRENGTH WASHERS SHALL CONFORM TO ASTM F436.
4. UNLESS A SNUG-TIGHT JOINT IS PERMITTED IN THE CONNECTION DETAIL, ALL BOLTS ARE TO BE INSTALLED BY ONE OF THE FOLLOWING PRETENSIONING METHODS AS SPECIFIED IN THE AISC "SPECIFICATION FOR STRUCTURAL JOINTS USING HIGH-STRENGTH BOLTS", SECTION 8:
   A. TURN-OF-NUT PRETENSIONING
5. THE SNUG-TIGHT CONDITION IS THE TIGHTNESS THAT IS ATTAINED WITH A FEW IMPACTS OF AN IMPACT WRENCH OR THE FULL EFFORT OF AN IRONWORKER USING AN ORDINARY SPUD WRENCH TO BRING THE CONNECTED PLIES INTO FIRM CONTACT.
6. ANCHOR BOLTS NEED NOT BE TIGHTENED PAST SNUG-TIGHT.
7. WHEN INSTALLING BOLTS REFER TO SECTIONS 8.1 AND 8.2 OF THE "SPECIFICATION FOR STRUCTURAL JOINTS USING HIGH-STRENGTH BOLTS" FOR GUIDANCE.
8. LOCAL JURISDICTIONS MAY REQUIRE AN INSPECTOR TO BE PRESENT TO WITNESS HARDWARE INSTALLATION AND INDEPENDENT TESTING. INSPECTION REQUIREMENTS SHOULD BE VERIFIED BY INSTALLER PRIOR TO STEEL ERECTION.
9. ERECTION OF THE FRAMING MEMBERS WILL REQUIRE THE MAIN COLUMNS TO BE PLUMB SQUARE AND TIGHTENED TO THE TRUSSES AND/OR TENSION MEMBERS BEFORE INSTALLING THE PURLINS. PURLINS, IF REQUIRED, MUST BE AS SHOWN IN FRAMING PLAN.
10. TEMPORARY SHORING OR BRACING SHALL BE USED TO COMPACT THE JOINTS UNTIL THE CONNECTED PLIES ARE IN FIRM CONTACT PRIOR TO PRETENSIONING.
11. PRIOR TO THE ERECTION OF SHELTER COMPONENTS, IT IS RECOMMENDED TO CHASE AND TAP STRUCTURAL HARDWARE.
12. ALL BOLTS MUST BE LUBRICATED WITH WAX TO ASSIST IN PROPER TIGHTENING. TO LUBRICATE A BOLT IN THE FIELD, APPLY THE WAX STICK DOWN THE LENGTH OF THE BOLT'S THREADS.
13. TO PREVENT RUST STAINING OF FINISH, ALL METAL SHAVINGS MUST BE REMOVED AFTER INSTALLATION. ENSURE NO SHAVING ARE TRAPPED BETWEEN MATING SURFACES.
14. TOUCH-UP PAINT MUST BE APPLIED TO ALL EXPOSED FASTENERS. PERIODIC TOUCH-UP AT THESE CONNECTIONS IS REQUIRED.
15. ENSURE FRAME MEMBERS WITH DRAIN HOLES NEAR THE ENDS OF TUBES ARE INSTALLED FACING UP UNLESS SPECIFIED IN THE FRAME CONNECTION DETAILS.

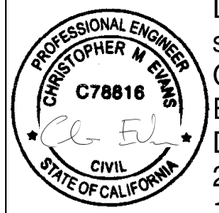

Digitally signed by Christopher Evans
Date: 2025.04.11 14:52:29-04'00'

IF THESE DRAWINGS ARE SEALED, THE SEAL APPLIES ONLY TO BUILDING COMPONENTS DETAILED WITHIN THESE DRAWINGS AND SUPPLIED BY PORTER CORP AS WELL AS THE FOUNDATION DESIGN, IF APPLICABLE.

poligon® by PORTER CORP
WWW.POLIGON.COM
MAIN: (616) 888-3500
FIELD SUPPORT: (616) 888-3504

PRINT DATE: 4/9/2025
SCALE: 1:4
DRAWN BY: anastasia.castle
REV LEVEL: A
CREATION DATE: 11/16/2016
ORDER NO: 82396
CAD MODEL: ~BLDG-P21522

PROJECT: SIERRA CREEK 3
PROJECT LOCATION: ANTELOPE, CA
DRAWING: FRAME CONNECTION DETAILS

SHEET
4

NOTE:
U-CLIP MUST BE ATTACHED TO TENSION MEMBER AS SHOWN PRIOR TO BUILDING ASSEMBLY.

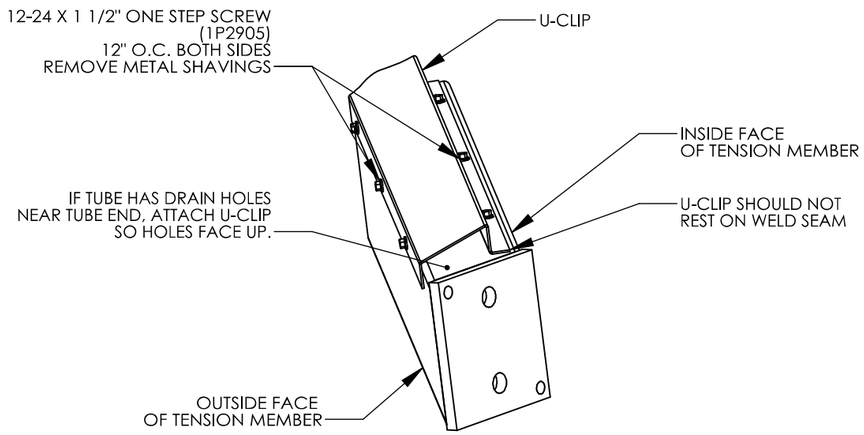

U-CLIP CONNECTION	UC-100

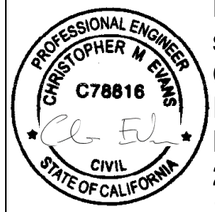

Digitally signed by Christopher Evans
Date: 2025.04.11 14:52:31-04'00'

IF THESE DRAWINGS ARE SEALED, THE SEAL APPLIES ONLY TO BUILDING COMPONENTS DETAILED WITHIN THESE DRAWINGS AND SUPPLIED BY PORTER CORP AS WELL AS THE FOUNDATION DESIGN, IF APPLICABLE.

poligon® by PORTER CORP
WWW.POLIGON.COM
MAIN: (616) 888-3500
FIELD SUPPORT: (616) 888-3504

CREATION DATE: 11/16/2016	DRAWN BY: anastasia.castle
PRINT DATE: 4/9/2025	
ORDER NO: 82396	REV LEVEL: A
SCALE: 1:4	
CAD MODEL: ~BLDG-P21522	
PROJECT: SIERRA CREEK 3	
PROJECT LOCATION: ANTELOPE, CA	
DRAWING: FRAME CONNECTION DETAILS	

SHEET

4.1

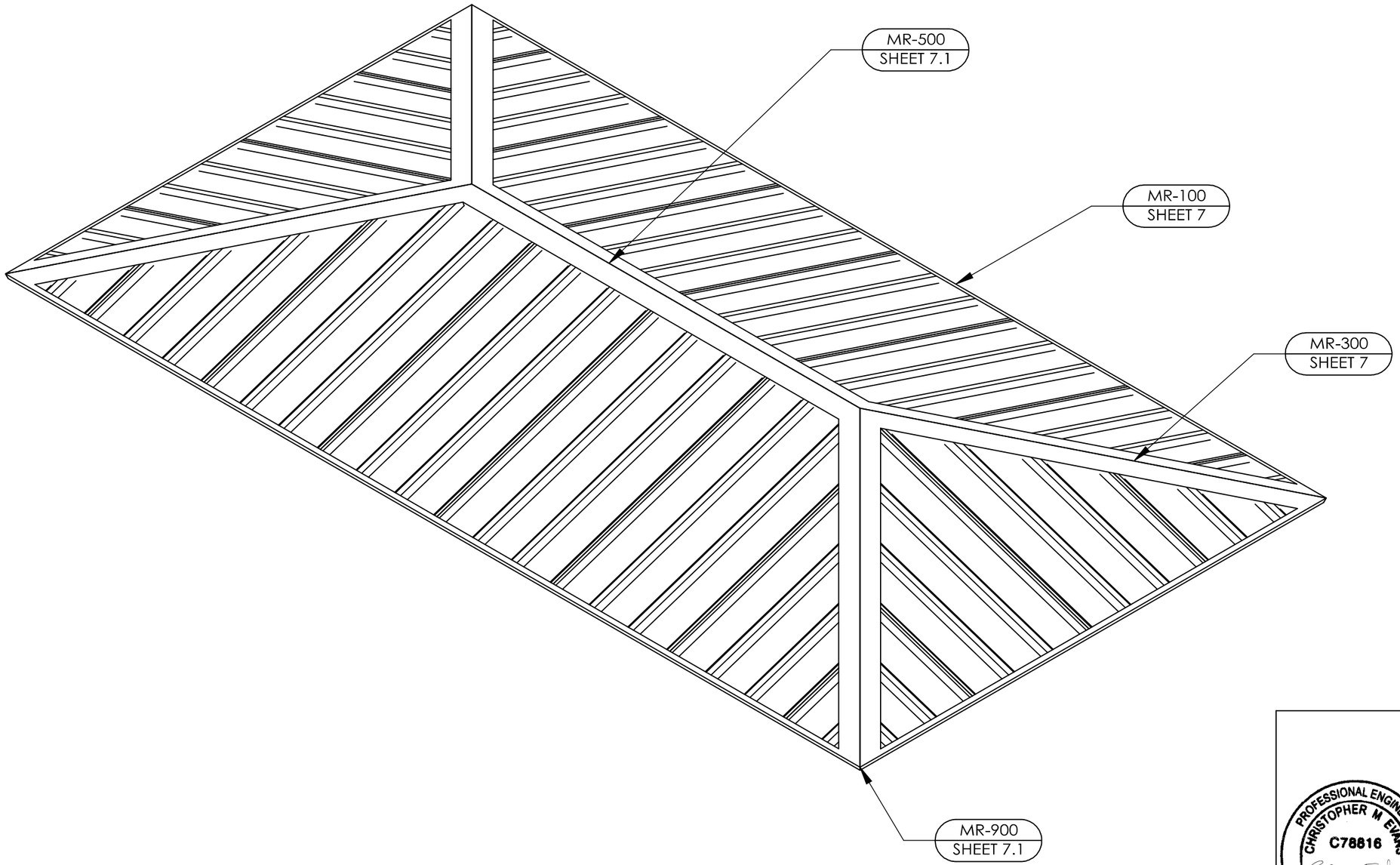

PROFESSIONAL ENGINEER
CHRISTOPHER M EVANS
C78816
CIVIL
STATE OF CALIFORNIA

Digitally signed by Christopher Evans
Date: 2025.04.11 14:54:17-04'00'

IF THESE DRAWINGS ARE SEALED, THE SEAL APPLIES ONLY TO BUILDING COMPONENTS DETAILED WITHIN THESE DRAWINGS AND SUPPLIED BY PORTER CORP AS WELL AS THE FOUNDATION DESIGN, IF APPLICABLE.

poligon® by PORTER CORP
WWW.POLIGON.COM
MAIN: (616) 888-3500
FIELD SUPPORT: (616) 888-3504

PRINT DATE:	4/9/2025
SCALE:	1:25
DRAWN BY:	anastasia.castle
REV LEVEL:	A
CREATION DATE:	11/16/2016
ORDER NO:	82396
CAD MODEL:	~BLDG-P21522

PROJECT: SIERRA CREEK 3
PROJECT LOCATION: ANTELOPE, CA
DRAWING: ROOF OVERVIEW

SHEET
6

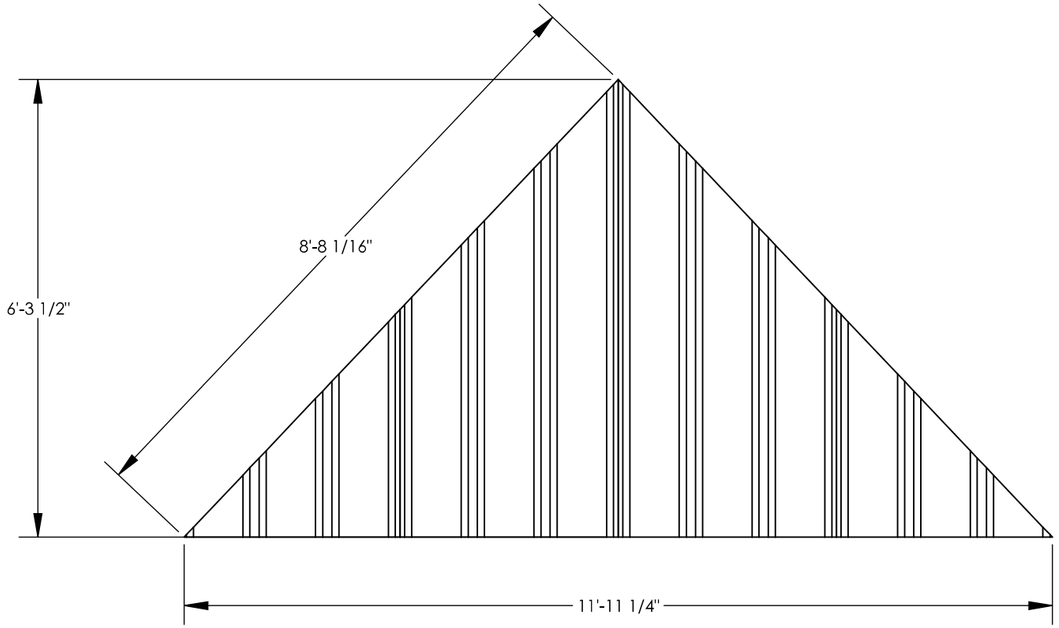

MULTI-RIB NOTES:

1. THE DETAILS SHOWN ARE SUGGESTIONS OR GUIDELINES ON HOW TO ERECT THE SYSTEMS. THE INFORMATION SHOWN IS ACCURATE, BUT IT IS NOT INTENDED TO COVER ALL INSTANCES, BUILDING REQUIREMENTS, DESIGNS OR CODES. THE DETAILS MAY REQUIRE CHANGES OR REVISIONS DUE TO FIELD CONDITIONS.

2. IT SHALL BE THE RESPONSIBILITY OF THE ERECTOR TO ENSURE THAT THE DETAILS MEET PARTICULAR BUILDING REQUIREMENTS AND TO ASSURE ADEQUATE WATER TIGHTNESS.

3. THE ERECTOR SHOULD THOROUGHLY FAMILIARIZE HIMSELF/HERSELF WITH ALL ERECTION INSTRUCTIONS BEFORE STARTING WORK.

4. THE PANELS SHOULD BE INSTALLED PLUMB, STRAIGHT, AND ACCURATELY TO THE ADJACENT WORK.

5. FLASHING AND TRIM SHALL BE INSTALLED TRUE, AND IN PROPER ALIGNMENT, WITH ANY EXPOSED FASTENERS EQUALLY SPACED FOR THE BEST APPEARANCE.

6. SEALANT SHALL BE FIELD APPLIED ON DRY, CLEAN SURFACES. SOME FIELD CUTTING AND FITTING OF PANELS AND FLASHING IS TO BE EXPECTED BY THE ERECTOR AND MINOR FIELD CORRECTIONS ARE A PART OF NORMAL ERECTION WORK.

7. WORKMANSHIP SHALL BE OF THE BEST INDUSTRY STANDARDS AND INSTALLATION SHALL BE PERFORMED BY EXPERIENCED METAL CRAFTSMEN.

8. METAL SHAVINGS FROM DRILLING OR INSTALLATION OF ROOF FASTENERS MUST BE CAREFULLY REMOVED FROM THE ROOF BY BRUSHING OR SWEEPING AT THE END OF EACH DAY DURING INSTALLATION. SHAVINGS LEFT ON THE ROOF WILL QUICKLY RUST AND STAIN THE ROOF FINISH.

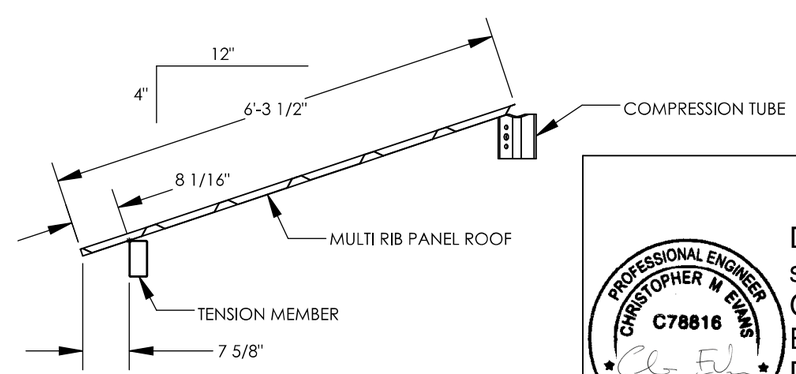

PROFESSIONAL ENGINEER
CHRISTOPHER M EVANS
C78816
CIVIL
STATE OF CALIFORNIA

Digitally signed by Christopher Evans
Date: 2025.04.11 14:52:36-04'00'

IF THESE DRAWINGS ARE SEALED, THE SEAL APPLIES ONLY TO BUILDING COMPONENTS DETAILED WITHIN THESE DRAWINGS AND SUPPLIED BY PORTER CORP AS WELL AS THE FOUNDATION DESIGN, IF APPLICABLE.

poligon® by PORTER CORP
WWW.POLIGON.COM
MAIN: (616) 888-3500
FIELD SUPPORT: (616) 888-3504

PRINT DATE: 4/9/2025
SCALE: 1:25
DRAWN BY: anastasia.castle
REV LEVEL: A
CREATION DATE: 11/16/2016
ORDER NO: 82396
CAD MODEL: ~BLDG-P21522

PROJECT: SIERRA CREEK 3
PROJECT LOCATION: ANTELOPE, CA
DRAWING: ROOF LAYOUT

SHEET
6.1

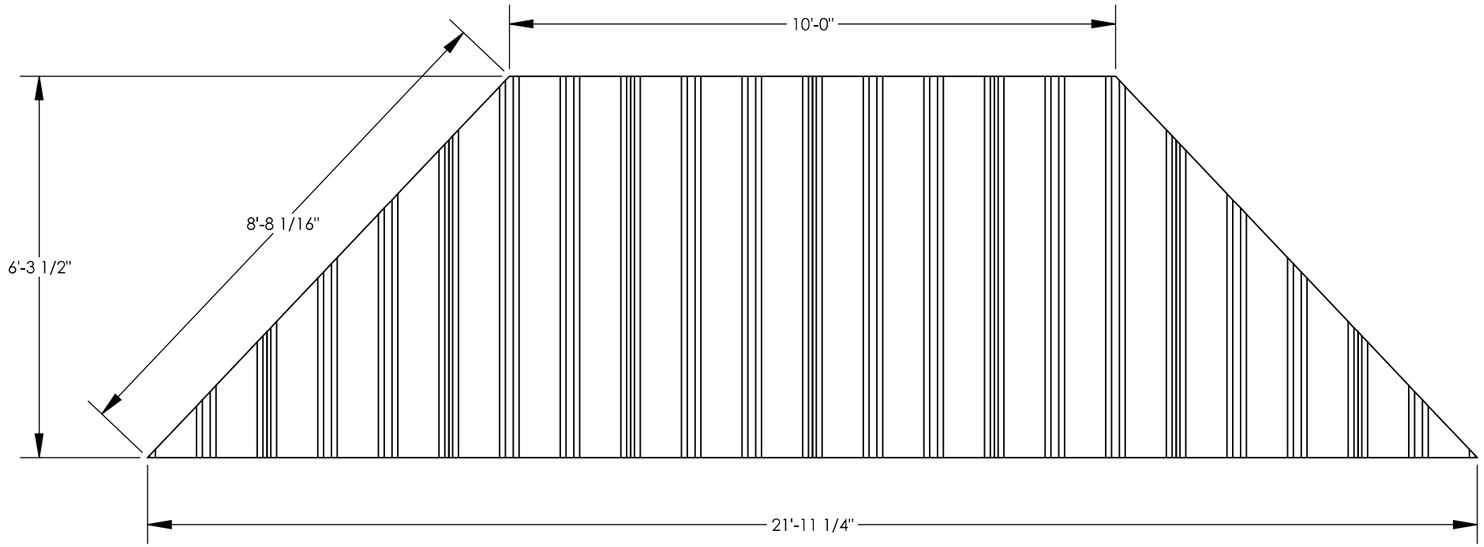

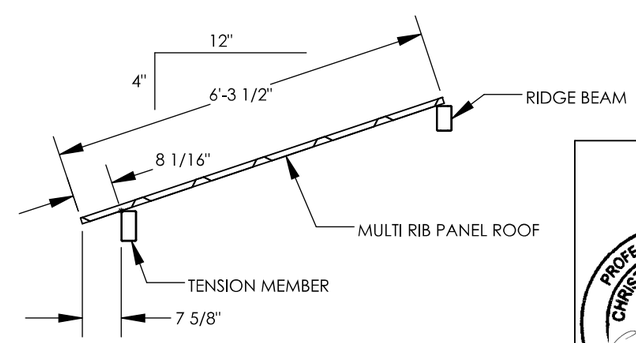

PROFESSIONAL ENGINEER
CHRISTOPHER M EVANS
C78816
CIVIL
STATE OF CALIFORNIA

Digitally signed by Christopher Evans
Date: 2025.04.11 14:52:40-04'00'

IF THESE DRAWINGS ARE SEALED, THE SEAL APPLIES ONLY TO BUILDING COMPONENTS DETAILED WITHIN THESE DRAWINGS AND SUPPLIED BY PORTER CORP AS WELL AS THE FOUNDATION DESIGN, IF APPLICABLE.

poligon® by PORTER CORP
WWW.POLIGON.COM
MAIN: (616) 888-3500
FIELD SUPPORT: (616) 888-3504

PRINT DATE: 4/9/2025
SCALE: 1:30
DRAWN BY: anastasia.castle
REV LEVEL: A
CREATION DATE: 11/16/2016
ORDER NO: 82396
CAD MODEL: ~BLDG-P21522

PROJECT: SIERRA CREEK 3
PROJECT LOCATION: ANTELOPE, CA
DRAWING: ROOF LAYOUT

SHEET
6.2

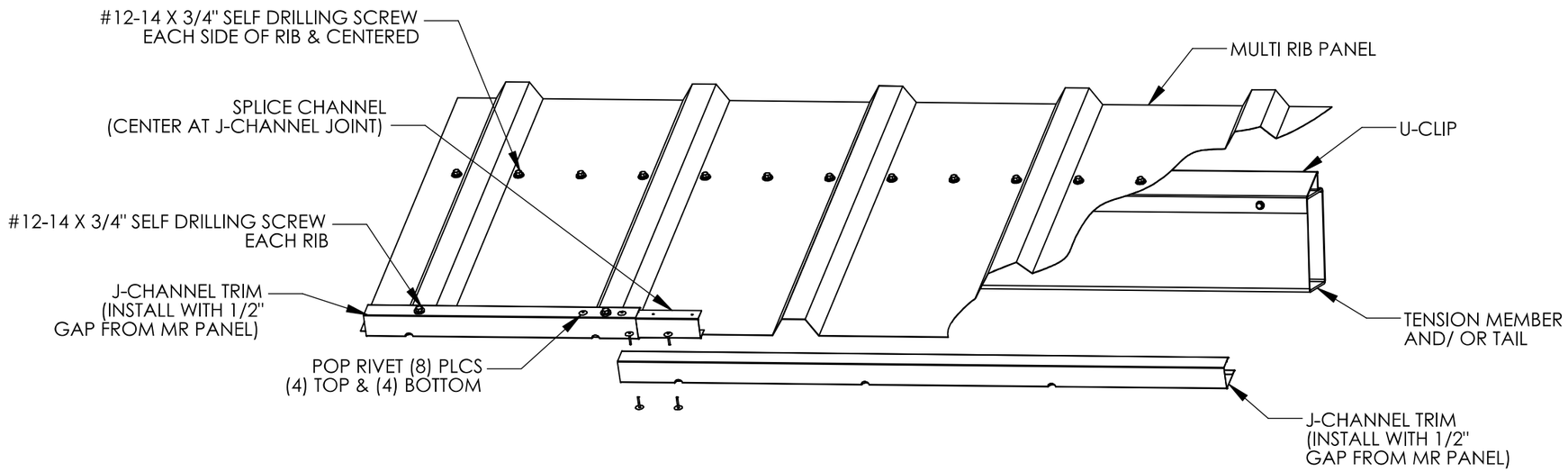

2024A

EAVE DETAIL

MR-100

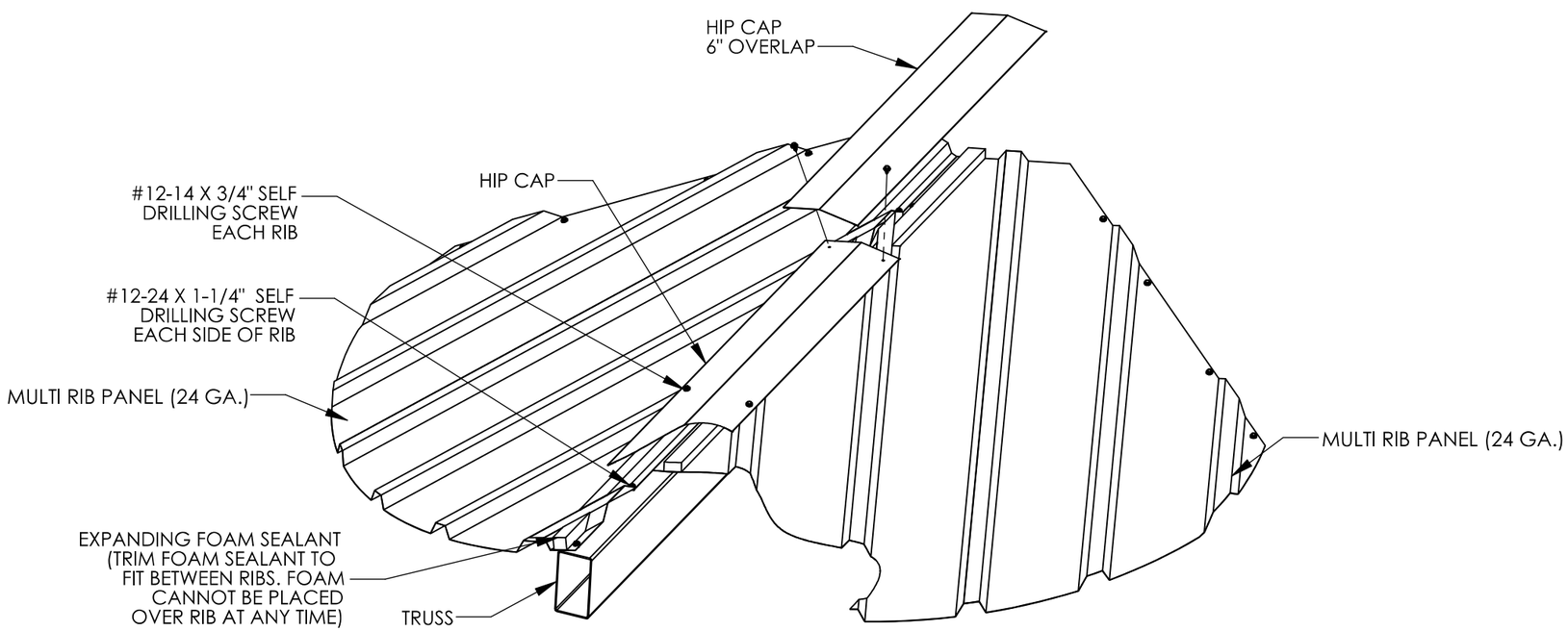

2023A

TRUSS DETAIL

MR-300

PART DESCRIPTIONS:

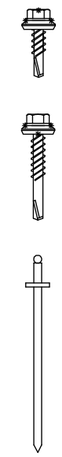

#12-14x3/4" SELF DRILLING SCREW.

#12-24x1 1/4" SELF DRILLING SCREW.

1/8" POP RIVET.

PROFESSIONAL ENGINEER
CHRISTOPHER M EVANS
C78816
CIVIL
STATE OF CALIFORNIA

Digitally signed by Christopher Evans
Date: 2025.04.11 14:52:43-04'00'

IF THESE DRAWINGS ARE SEALED, THE SEAL APPLIES ONLY TO BUILDING COMPONENTS DETAILED WITHIN THESE DRAWINGS AND SUPPLIED BY PORTER CORP AS WELL AS THE FOUNDATION DESIGN, IF APPLICABLE.

poligon® by PORTER CORP
WWW.POLIGON.COM
MAIN: (616) 888-3500
FIELD SUPPORT: (616) 888-3504

PRINT DATE: 4/9/2025
SCALE: NTS
DRAWN BY: anastasia.castle
REV LEVEL: A
CREATION DATE: 11/16/2016
ORDER NO: 82396
CAD MODEL: ~BLDG-P21522

PROJECT: SIERRA CREEK 3
PROJECT LOCATION: ANTELOPE, CA
DRAWING: ROOF CONNECTION DETAILS

SHEET
7

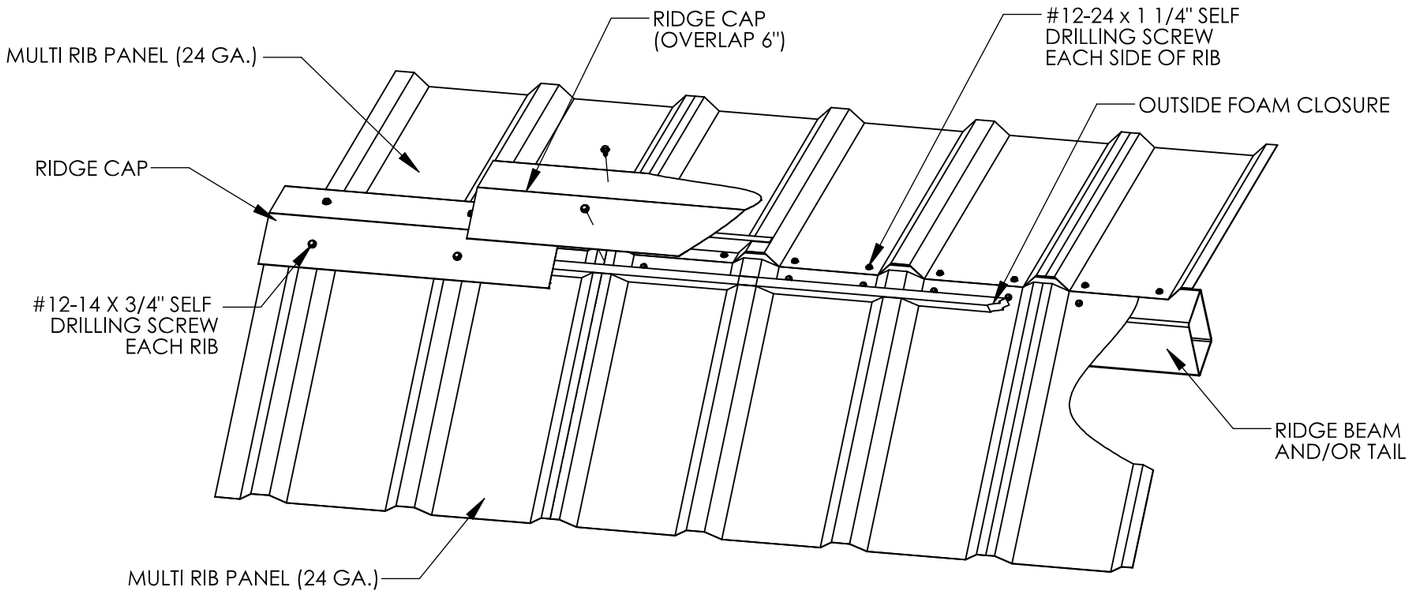

2023A | RIDGE DETAIL | MR-500

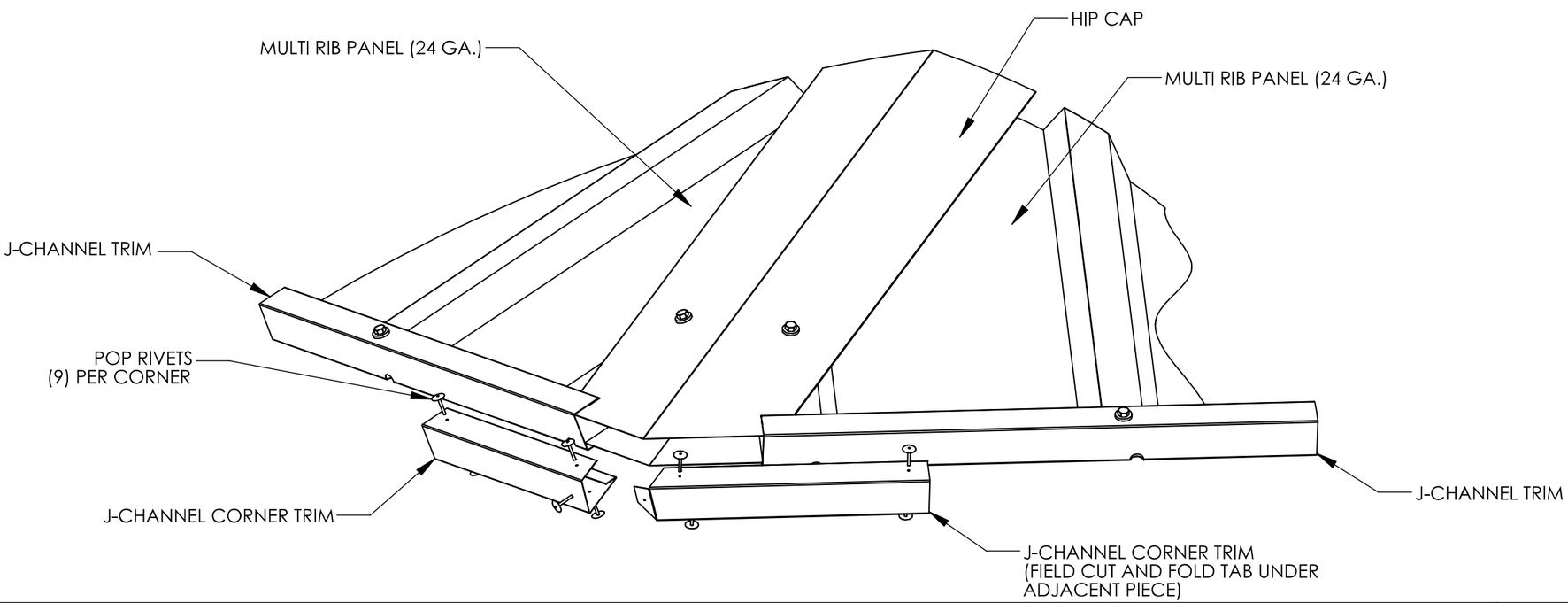

2022A | CORNER DETAIL | MR-900

PROFESSIONAL ENGINEER
CHRISTOPHER M EVANS
C78816
CIVIL
STATE OF CALIFORNIA

Digitally signed by Christopher Evans
Date: 2025.04.11 14:52:46-04'00'

IF THESE DRAWINGS ARE SEALED, THE SEAL APPLIES ONLY TO BUILDING COMPONENTS DETAILED WITHIN THESE DRAWINGS AND SUPPLIED BY PORTER CORP AS WELL AS THE FOUNDATION DESIGN, IF APPLICABLE.

poligon® by PORTER CORP
WWW.POLIGON.COM
MAIN: (616) 888-3500
FIELD SUPPORT: (616) 888-3504

PRINT DATE: 4/9/2025
SCALE: NTS
DRAWN BY: anastasia.castle
REV LEVEL: A
CREATION DATE: 11/16/2016
ORDER NO: 82396
CAD MODEL: ~BLDG-P21522

PROJECT: SIERRA CREEK 3
PROJECT LOCATION: ANTELOPE, CA
DRAWING: ROOF CONNECTION DETAILS

SHEET
7.1

Restroom / Storage Building

Sierra Creek Park

7765 Watt Ave, North Highlands, CA 95843

Code Compliance

Applicable Codes:	California Title 24 2025 California Building Code 2025 California Electrical Code 2025 California Plumbing Code 2025 California Mechanical Code 2025 California Green Building Standards Code 2025 California Energy Code
Type of Construction:	VB
Description:	Park Restroom / Storage
Occupancy:	U (w/ Accessibility Provisions)
Occupant Load:	5
Floor Area:	529 square feet
Gross Wall Area:	757 square feet
Climate Zone:	12
PRC Project Number:	11307B

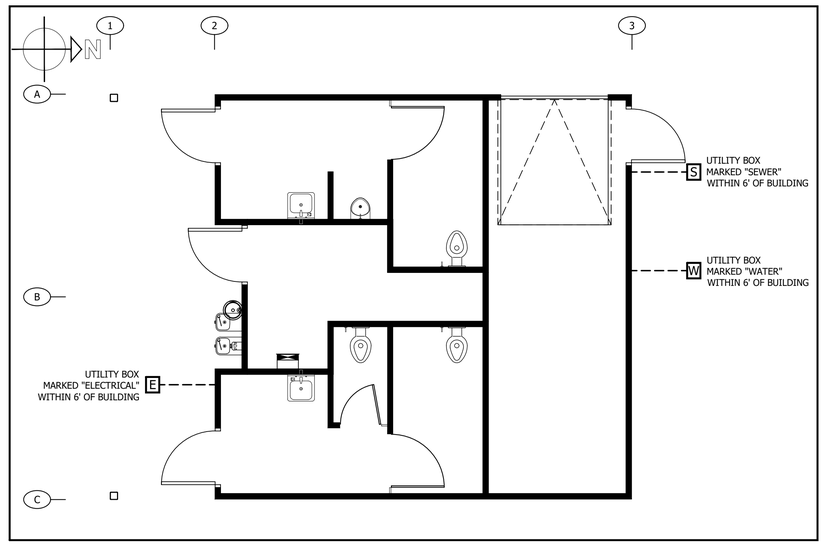

Index to Drawing

T-1 Title Sheet.

AC Accessibility Compliance.

A-1 Floor Plan, Structural Design, Door Schedule.

A-1.1 Sections.

A-1.2 Roof Framing Plan.

A-2 Exterior Elevations, Exterior Finish Schedule.

A-3 Interior Elevations, Interior Finish & Accessories Schedules.

A-4 Details, Fastening Schedule.

A-4.1 Details.

A-5 Cap Beam Plan & Details.

A-5.1 Steel Truss & Details.

P-1 Plumbing Plan & Information.

E-1 Electrical Plan & Information.

E-2 Electrical Solar Ready Zone Plan.

S-1 Slab Plan.

General Notes

- The structural design details herein are specific to the building size and module configuration shown on the floor plan of these drawings.
- This building will be sited a minimum of 10 feet from all property lines and 10 feet from any assumed property lines between existing structures on site.
- Thermal envelope requirements not applicable due to the building being unconditioned.
- ADA Accessibility to this structure shall be in conformance with local code including all pathways, ramps and paths of travel from parking to building
- Soil bearing requirement is 1500 psf, subGRADE Compaction at 90%.
- Building plumbing system is based upon full flow existing water service. Loss of required flow rate of 10 gpm or pressure below 35 psi may necessitate an intermediate well tank and check valve in line.
- Project close out documentation including, but not limited to, applicable calculations, energy compliance reports, fenestration NFRC rating certificates and O & M manuals is required to be delivered to the building owner within 90 days of their receipt of the certificate of occupancy.
- This building has not been designed to meet the minimum standards for placement in any Fire Hazard Severity Zone within State Responsibility Areas or any Wildland-Urban Interface Fire Area. The local AHJ is to verify that this building will not be placed in the areas described above.
- This Building has been designed for compliance with the California Green Building Standards code including but not limited to water conserving plumbing fixtures, low VOC paints & adhesives.
- Site installation details are noted on sheets A-4, A-5 and S-1 for structural connections, A-2 for weatherization finish, P-1 for Plumbing connections and E-1 for electrical connections. **SITE INSTALLATION PROCEDURE INCLUDES BUT NOT LIMITED TO:** Service Hookups (Electrical & Plumbing connections), Installation of Ridgecap material Installation of Modline trim interior and Exterior, Install backer rod and caulk mod line - walls, Install SL-1 Self-leveling caulk (use on floor joint)Grout Tile at mod line connection, Finish paint modline connection. Installation of Modline & Capbeam Mod connections.

Project Information

Certified Manufacturer:
Blazer Modular Construction
PO Box 489
Aumsville, OR 97325
Contact: Jamie Holmes
Phone: (503) 749-1900
Fax: (503) 749-3969
E-mail: james@blazermodular.com

Designer / Dealer:
PUBLIC RESTROOM COMPANY
2587 Business Parkway
Minden, NV 89423
Contact: Chad Kaufman
Phone: (888) 888-2060
Fax: (888) 888-1448
Email: Chad@publicrestroomcompany.com
www.publicrestroomcompany.com

Building Engineer:
Rock Shetler, P.E.
Blazer Modular Construction
PO Box 489
Aumsville, OR 97325
Phone: (503) 749-1900
E-mail: rock@blazermodular.com

Project Owner:
North Highlands Parks & Rec Disctrict
6040 Watt Ave.
North Highlands, CA 95660
Contact: Scott Graham
Phone: (916) 332-7440
Email: scott@nhrpd.org

Design Loads

Roof ..... 20 psf

Wind ..... 115 mph Exposure "C" (V)

Floor ..... 50 psf, Slab-On-Grade (250 psf STORAGE)

Seismic ..... Site Soil Class Default, SDC D, S_{DS} = 0.573, S_{D1} = 0.380

Risk Category II

Minimum allowable soil pressure 1,500 psf

APPROVED: STATE OF CA - CERTIFIED DAA
Based on the requirements of title 25 California code of regulations
Chapter 3 subchapter 2 Commercial Modular
Date: 3/30/2026 Expires: 6/30/2027
Approval # PFS: 26-003092
THIS APPROVAL DOES NOT AUTHORIZE OR APPROVE ANY OMISSION OR DEVIATION FROM THE REQUIREMENTS OF STATE LAWS OR APPLICABLE LOCAL ORDINANCES . THIS APPROVAL IS LIMITED TO FACTORY-BUILT PORTION ONLY.
PFS CORPORATION - Los Angeles, CA

03/25/2026
REGISTERED PROFESSIONAL ENGINEER
ROCK M. SHETLER
59228
CIVIL
STATE OF CALIFORNIA

DATE	REV#	REVISION	BY	DATE	REV#	REVISION	BY

Blazer Modular Construction
P.O. BOX 489 945 Olney St. ■ Aumsville, OR 97325-0489
www.blazermodular.com

COPYRIGHT 2026, BLAZER MODULAR CONSTRUCTION AND PUBLIC RESTROOM COMPANY. THIS MATERIAL IS THE EXCLUSIVE PROPERTY OF BLAZER MODULAR CONSTRUCTION AND PUBLIC RESTROOM COMPANY AND SHALL NOT BE REPRODUCED, USED, OR DISCLOSED TO OTHERS EXCEPT AS AUTHORIZED BY THE WRITTEN PERMISSION OF BLAZER MODULAR CONSTRUCTION OR PUBLIC RESTROOM COMPANY.

PUBLIC RESTROOM COMPANY
Building Better Places To Go.
Ph: 888-888-2060 | Fax: 888-888-1448

PROJECT NAME & LOCATION:
SIERRA CREEK PARK
NORTH HIGHLANDS, CA

SHEET TITLE:
TITLE SHEET

Approved for Const:
File Copy:
Drawn By: RLD
Issue Date: 03/25/2026
Job No: 20702

T-1

R:\2026 Drawings\Restroom Buildings\20702 Sierra Creek Park - CA\20702 Sierra Creek Park.dwg, T-1, 3/25/2026 1:42:37 PM

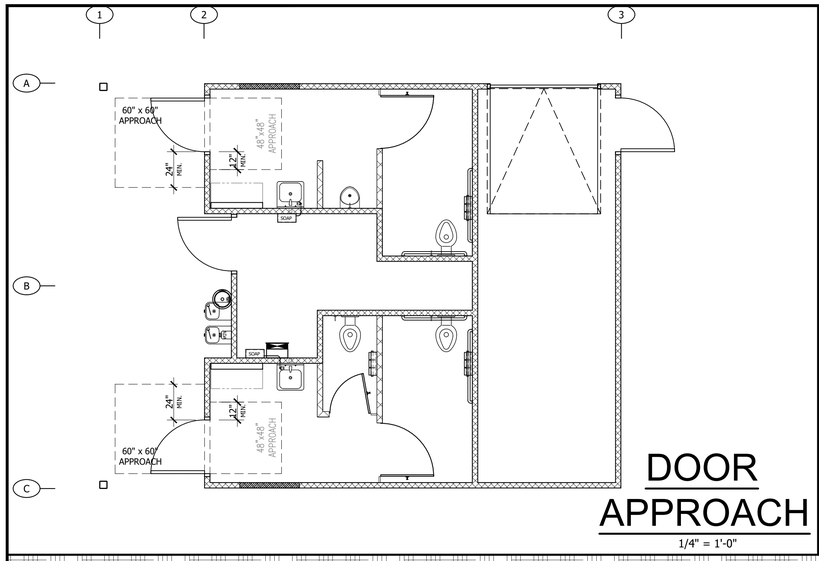

DOOR APPROACH

1/4" = 1'-0"

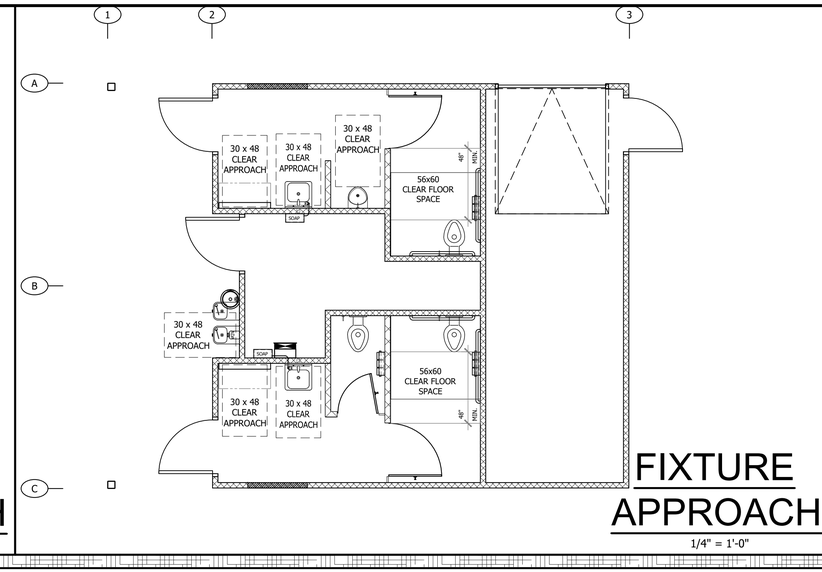

FIXTURE APPROACH

1/4" = 1'-0"

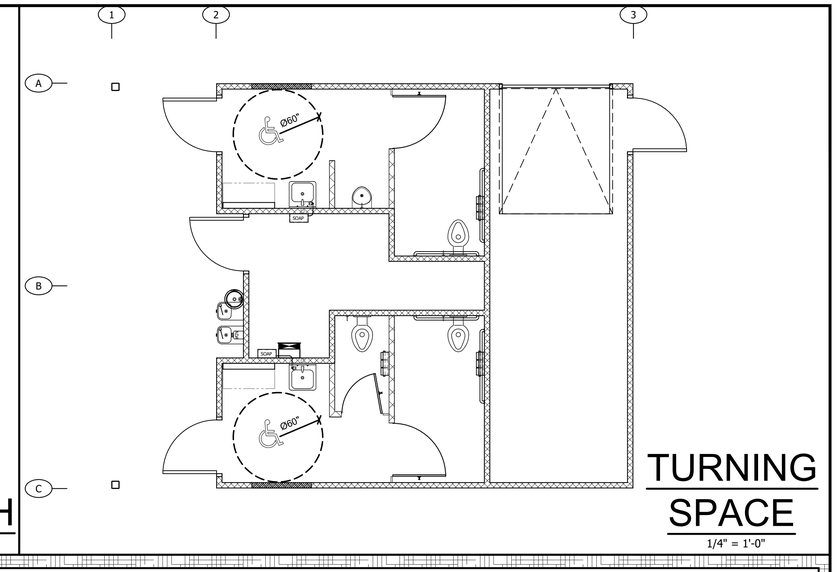

TURNING SPACE

1/4" = 1'-0"

CALIFORNIA ACCESSIBILITY STANDARDS

(SHOWING MINIMUMS & MAXIMUMS)

APPROVED: STATE OF CA - CERTIFIED DAA

Based on the requirements of title 25 California code of regulations
Chapter 3 subchapter 2 Commercial Modular

Date: 3/30/2026 **Expires:** 6/30/2027

Approval # PFS: 26-003092

THIS APPROVAL DOES NOT AUTHORIZE OR APPROVE ANY OMISSION OR DEVIATION FROM THE REQUIREMENTS OF STATE LAWS OR APPLICABLE LOCAL ORDINANCES . THIS APPROVAL IS LIMITED TO FACTORY-BUILT PORTION ONLY.

PFS **PFS CORPORATION** - Los Angeles, CA

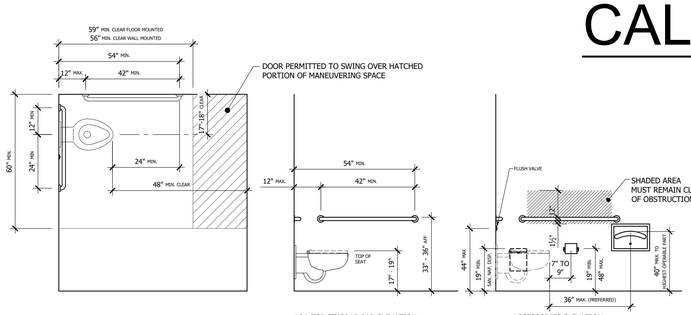

	CODE SUMMARY HEIGHT AFF/LOC	PUBLIC RESTROOM COMPANY STANDARDS
GRAB BARS	33" MIN. / 36" MAX. TO TOP	34" AFF. TO CENTER
CENTER OF TOILET FROM WALL	17" MIN. / 18" MAX.	17 1/2" TO CENTER
TOILET/SEAT	17" MIN. / 19" MAX.	18" TO TOP OF SEAT
TOILET FLUSH VALVE	44" MAX., MOUNTED ON OPEN SIDE	CENTERLINES TO BE 28" AFF AND 10" FROM CENTER OF WC
TP DISPENSER	BOTTOM TO BE 19" MIN. AFF TOP TO BE 48" MAX. AFF CENTER OF FURTHEST ROLL TO BE 7" TO 9" FROM FRONT OF WC.	8" NOM. IN FRONT OF TOILET TO CENTERLINE OF FRONT ROLL AND 30" TO TOP

NOTE: SPACE BETWEEN GRAB BAR AND WALL OR ANY OBSTRUCTION TO BE 1 1/2" CLEAR.
GRAB BAR DIAMETER TO BE 1 1/4" to 1 1/2".
GRAB BAR MUST BE ABLE TO SUPPORT 250 lb POINT LOAD AND NOT ROTATE WITHIN THE FITTINGS.

1-TOILET DESIGN CRITERIA: CAL. CBC, 2025

11B-606.5:
WATER SUPPLY AND DRAIN PIPES UNDER LAVATORIES AND SINKS SHALL BE INSULATED OR OTHERWISE CONFIGURED TO PROTECT AGAINST CONTACT. THERE SHALL BE NO SHARP OR ABRASIVE SURFACES UNDER LAVATORIES AND SINKS.

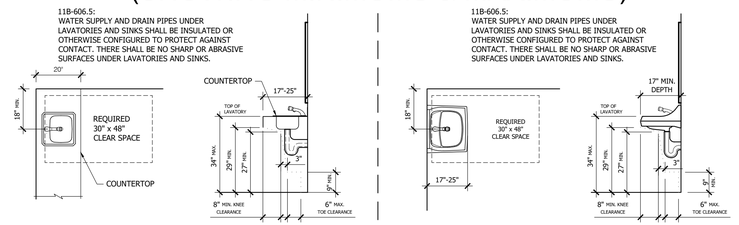

	CODE SUMMARY HEIGHT AFF/LOC	PUBLIC RESTROOM COMPANY STANDARDS
RIM HEIGHT (TOP OF LAV)	34" MAX	33" PREFERRED BUT MUST HAVE MIN. 29" KNEE SPACE
HEIGHT OF KNEE SPACE	29" MIN. AT FRONT APRON 27" MIN. AT 8" IN FROM FRONT	PER CODE
FRONT LAV TO TRAP	8" MIN	PER CODE
TOE SPACE UNDER TRAP	9" MIN	PER CODE
CONTROLS	DECK MT AT 34" MAX	33" PREFFERED
CLEAR SPACE	30" x 48"	PER CODE

2-LAVATORY/SINK DESIGN CRITERIA: CAL. CBC, 2025

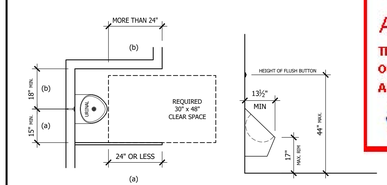

	CODE SUMMARY	PUBLIC RESTROOM COMPANY STANDARDS
URINAL RIM	13 1/2"" MIN. / 17" MAX. AFF.	16" AFF
CONTROLS	44" MAX. AFF.	10" NOM. ABOVE TOP OF URINAL
URINAL SCREENS (a)	15" MIN. CLEARANCE FROM CENTER LINE OF URINAL TO ANY ADJACENT OBSTRUCTION WHEN, THAT OBSTRUCTION PROJECTS OUT 24" OR LESS FROM THE FRONT EDGE OF THE URINAL RIM. EACH SIDE OF URINAL CONSIDERED INDEPENDENTLY.	PER CODE
(b)	18" MIN. CLEARANCE FROM CENTER LINE OF URINAL TO ANY ADJACENT OBSTRUCTION WHEN, THAT OBSTRUCTION PROJECTS OUT MORE THAN 24" FROM THE FRONT EDGE OF THE URINAL RIM. EACH SIDE OF URINAL CONSIDERED INDEPENDENTLY.	

3-URINAL DESIGN CRITERIA: CAL. CBC, 2025

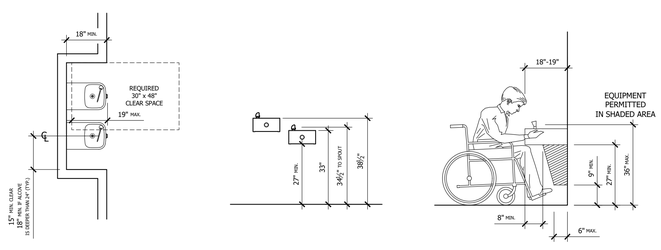

	CODE SUMMARY HEIGHT AFF/LOC
TOP OF BUBBLER OUTLET	36" MAX
KNEE CLEARANCE	27" MIN
TOE CLEARANCE	9" MIN
APPROACH	30" x 48"

NOTE: D.F. ACTIVATOR TO BE WITHIN 6" OF FRONT EDGE OF D.F.

4-DRINKING FOUNTAIN: CAL. CBC, 2025

NOT ALL ACCESSORIES SHOWN PERTAIN TO THIS PROJECT.
ITEMS SHOWN ARE FOR REPRESENTATION ONLY.

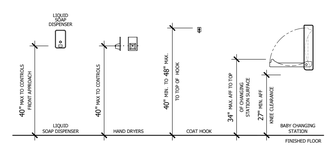

NOTES:

1. NO FIXTURES IN THIS VIEW PROTRUDE MORE THAN 4"
2. ALL ACCESSIBLE FIXTURES/ACCESSORIES SHALL BE MOUNTED w/ CODE COMPLIANT FORWARD AND/OR SIDE REACH RANGES

5-ACCESSORIES MOUNTING HEIGHT: CAL. CBC, 2025

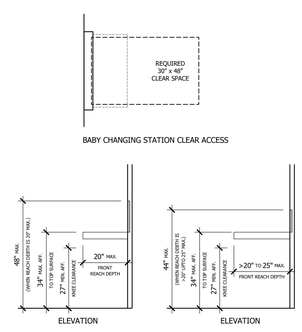

6-BABY CHANGING STATION CRITERIA: CAL.CBC, 2025

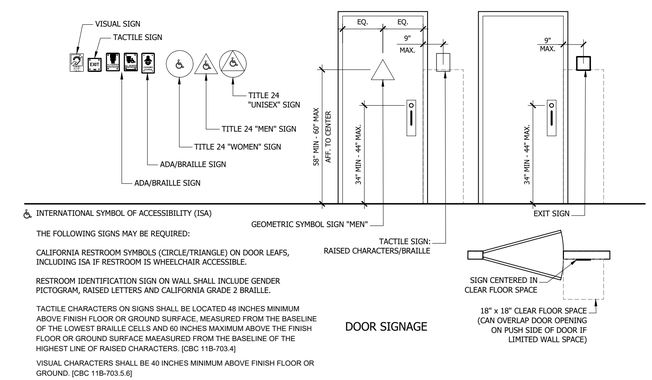

THE FOLLOWING SIGNS MAY BE REQUIRED:

CALIFORNIA RESTROOM SYMBOLS (CIRCLE/TRIANGLE) ON DOOR LEAFS, INCLUDING ISA IF RESTROOM IS WHEELCHAIR ACCESSIBLE.

RESTROOM IDENTIFICATION SIGN ON WALL SHALL INCLUDE GENDER PICTOGRAM, RAISED LETTERS AND CALIFORNIA GRADE 2 BRAILLE.

TACTILE CHARACTERS ON SIGNS SHALL BE LOCATED 48 INCHES MINIMUM ABOVE FINISH FLOOR OR GROUND SURFACE. MEASURED FROM THE BASELINE OF THE LOWEST BRAILLE CELLS AND 60 INCHES MAXIMUM ABOVE THE FINISH FLOOR OR GROUND SURFACE MAEASURED FROM THE BASELINE OF THE HIGHEST LINE OF RAISED CHARACTERS. [CBC 11B-703.4]

VISUAL CHARACTERS SHALL BE 40 INCHES MINIMUM ABOVE FINISH FLOOR OR GROUND. [CBC 11B-703.5.6]

DOOR SIGNAGE

7-SIGNS AT DOORS AND GATES: CAL. CBC, 2025

DATE	REV#	REVISION	BY	DATE	REV#	REVISION	BY

Blazer Modular Construction.
P.O. BOX 489 945 Olney St. ■ Aumsville, OR 97325-0489
www.blazermodular.com

COPYRIGHT 2026, BLAZER MODULAR CONSTRUCTION AND PUBLIC RESTROOM COMPANY. THIS MATERIAL IS THE EXCLUSIVE PROPERTY OF BLAZER MODULAR CONSTRUCTION AND PUBLIC RESTROOM COMPANY AND SHALL NOT BE REPRODUCED, USED, OR DISCLOSED TO OTHERS EXCEPT AS AUTHORIZED BY THE WRITTEN PERMISSION OF BLAZER MODULAR CONSTRUCTION OR PUBLIC RESTROOM COMPANY.

PUBLIC RESTROOM COMPANY
Building Better Places To Go.
Ph: 888-888-2060 | Fax: 888-888-1448

PROJECT NAME & LOCATION:
SIERRA CREEK PARK
NORTH HIGHLANDS, CA

SHEET TITLE:
ACCESSIBILITY

Approved for Const:
File Copy:
Drawn By: RLD
Issue Date: 03/25/2026
Job No: 20702
AC

R:\2026 Drawings\Restroom Buildings\20702 Sierra Creek Park - CA\20702 Sierra Creek Park.dwg, AC, 3/25/2026 1:42:39 PM

DOOR, FRAME & HARDWARE SCHEDULE

~ALL DOORS OPERABLE~

DOOR NO.	ROOM NAME	QTY	SIZE	1 & 2 TYPE	3 HINGE	4 LOCK	5a CLOSER	5b PULL PLATE	5c THRESH	5d SWEEP	6 NOTES
1	MEN'S ADARR	1	3' x 7'	HM	CONT	a2	YES	BOTH SIDES	YES	NO	
2	WOMEN'S ADARR	1	3' x 7'	HM	CONT	a2	YES	BOTH SIDES	YES	NO	
3	MECH. ROOM	1	3' x 7'	HM	CONT	a1	NO	BOTH SIDES	YES	YES	6b
4	STORAGE	1	3' x 7'	HM	CONT	a1	NO	BOTH SIDES	YES	YES	6a
5	STORAGE	1	6' x 7'	LOW CLEARANCE SECTIONAL GARAGE DOOR - 20 ga. - WITH SLIDE LOCK AND PULL HANDLE ON INTERIOR ONLY							

NOTE: DOOR HARDWARE SHALL BE COMPLIANT WITH 2025 CBC SECTION 11B-404.2.7

NOTES:

1. DOOR TYPES:
   a) HM: GALVANIZED HOLLOW METAL, 14 ga. DOOR w/ 14 ga. FRAME.
   b) 20 ga. SECTIONAL GARAGE DOOR - WAYNE DALTON CX20
2. ALL H.M. DOOR FRAMES:
   a) WELDED.
   b) 4¾" WIDE OVERALL.
   c) 4" MASONRY HEADERS.
3. HINGE SPECS:
   a) CONT: PEMKO KCFM-83" HD CONTINUOUS GEAR HINGE.
4. LOCKS:
   a) DEADBOLT: SCHLAGE B SERIES 626 w/ TEMPORARY CONSTRUCTION FULL SIZE INTERCHANGEABLE CORE (FSIC)
      1) B660J - KEY ONE SIDE, ADA TURN LEVER LOCKS AND UNLOCKS.
      2) B663J - KEY ONE SIDE, ADA TURN LEVER UNLOCKS ONLY.
5. HARDWARE SPECS:
   a) CLOSERS: LCN 4211 CUSH FOR OUT-SWING DOOR, REG-AL FOR IN-SWING DOOR
   b) PULL PLATE: ROCKWOOD VRT24C US32DxS1 CFC US32DMS w/ BLACK COOL COATING HANDLE AND LATCH GUARD.
   c) THRESH:
      1) PEMKO #270A (FOR NON-TILE FLOORS)
   d) SWEEP: PEMKO 321SSN INSTALLED ON PULL SIDE OF DOOR.
6. OTHER:
   a) PROVIDE DOOR CHECK CHAIN (IVES CS 115-20)
   b) DOOR STOP (IVES WS 449B26D)

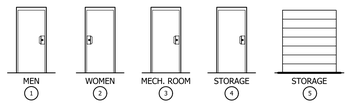

GENERAL NOTES:
a) ALL DOOR HARDWARE TO HAVE SS/SATIN CHROME/ALUMINUM TYPE FINISH.
b) ALL DOORS TO BE PREPPED FOR 2¾" BACKSET LOCKS UNLESS NOTED OTHERWISE.
c) KEY ALL DOORS ALIKE - PROVIDE 2 KEYS PER DOOR.
d) DOOR CLOSER OPEN DEGREE TO BE 180 UNLESS NOTED OTHERWISE.
e) DOORS INSTALLED AT THE FACTORY ARE SET FOR COMPLIANCE WITH DOOR CLOSING SPEED. DUE TO CHANGES DURING CLIENT SHIPPING OR CLIMATE, IT IS REQUIRED THAT ALL DOORS BE RETESTED AND ADJUSTED AS NECESSARY ON-SITE BY OTHERS TO ENSURE THEY MAINTAIN COMPLIANCE. [11B-404.2.8]
f) DOORS INSTALLED AT THE FACTORY ARE SET FOR COMPLIANCE WITH DOOR OPENING FORCE. DUE TO CHANGES DURING CLIENT SHIPPING OR CLIMATE, IT IS REQUIRED THAT ALL DOORS BE RETESTED AND ADJUSTED AS NECESSARY ON-SITE BY OTHERS TO ENSURE THEY MAINTAIN COMPLIANCE. [11B-404.2.9]

STRUCTURAL DESIGN

~SEE SHEETS A-2 & A-3 FOR INTERIOR AND EXTERIOR FINISHES~

COMPONENT	GENERIC DESCRIPTION	SPECIFIC MATERIAL LIST	NOTES
FOUNDATION / FLOOR DECK:			
CONCRETE SLAB			#1
PERIMETER FRAMEWORK	STRUCTURAL STEEL	L6x6x5/16 (ASTM A36)	
REINFORCEMENT	REBAR MAT DESIGN	#4 MIN. ASTM GRADE 60	
CONCRETE (LIGHT WEIGHT)	8" MAT DESIGN	CUSTOM 4000 psi. (DESIGN BASIS IS 2500 psi.) WITH INTEGRAL ADDITIVES FOR MOISTURE, STAINING, & CORROSION RESISTANCE	
WALLS:			
FRAMING (EXT):			
TO 7'-4"	CMU BLOCK	4" PRECISION CONCRETE BLOCK	PG A-2
ALCOVE	CMU BLOCK	4" PRECISION CONCRETE BLOCK	
CAP BEAM	STEEL	HSS6x4x1/8" (ASTM A500 GRADE C)	
ABOVE 7'-4" OR CAP BEAM	2x3 WOOD	2x3 DF STUDS @ 16"oc.; 2x3 PT BOTTOM PLATE	
FRAMING (INT):			
TO 7'-4"	CMU BLOCK	4" PRECISION CONCRETE BLOCK	
CAP BEAM	STEEL	HSS6x4x1/8" (ASTM A500 GRADE C)	
ABOVE 7'-4" OR CAP BEAM	2x3 WOOD	2x3 DF STUDS @ 16"oc.; 2x3 PT BOTTOM PLATE	
SHEATHING (ABOVE CAP BEAM)			
ALL FRAMED WALLS (BOTH SIDES)	7/16" OSB	7/16" APA RATED SHEATHING	#2
ROOF:			
RAFTERS	2x6 WOOD	2x6 DF #2 @ (24" oc. OVER RR)(16" oc. OVER PORCH & STORAGE)	
RIDGEBEAM	GLULAM	3 1/2" x 7 1/2" 24F-V4	
SHEATHING (TOP OF RAFTER)	5/8" PLYWOOD	19/32 APA RATED (40/20)	
SHEATHING (BOTTOM OF RAFTER)	5/8" OSB	19/32 APA RATED (40/20)	#3
FASCIA	STEEL	16 ga. FORMED STEEL	

NOTES:
1. COAT WITH ADDITIVE FOR URINE AND MOISTURE RESISTANCE.
2. PAINT WALL SHEATHING FOR MOISTURE PROTECTION (ONE SIDE).
3. SEE INTERIOR FINISH SCHEDULE FOR FINISHED CEILING CALLOUT.

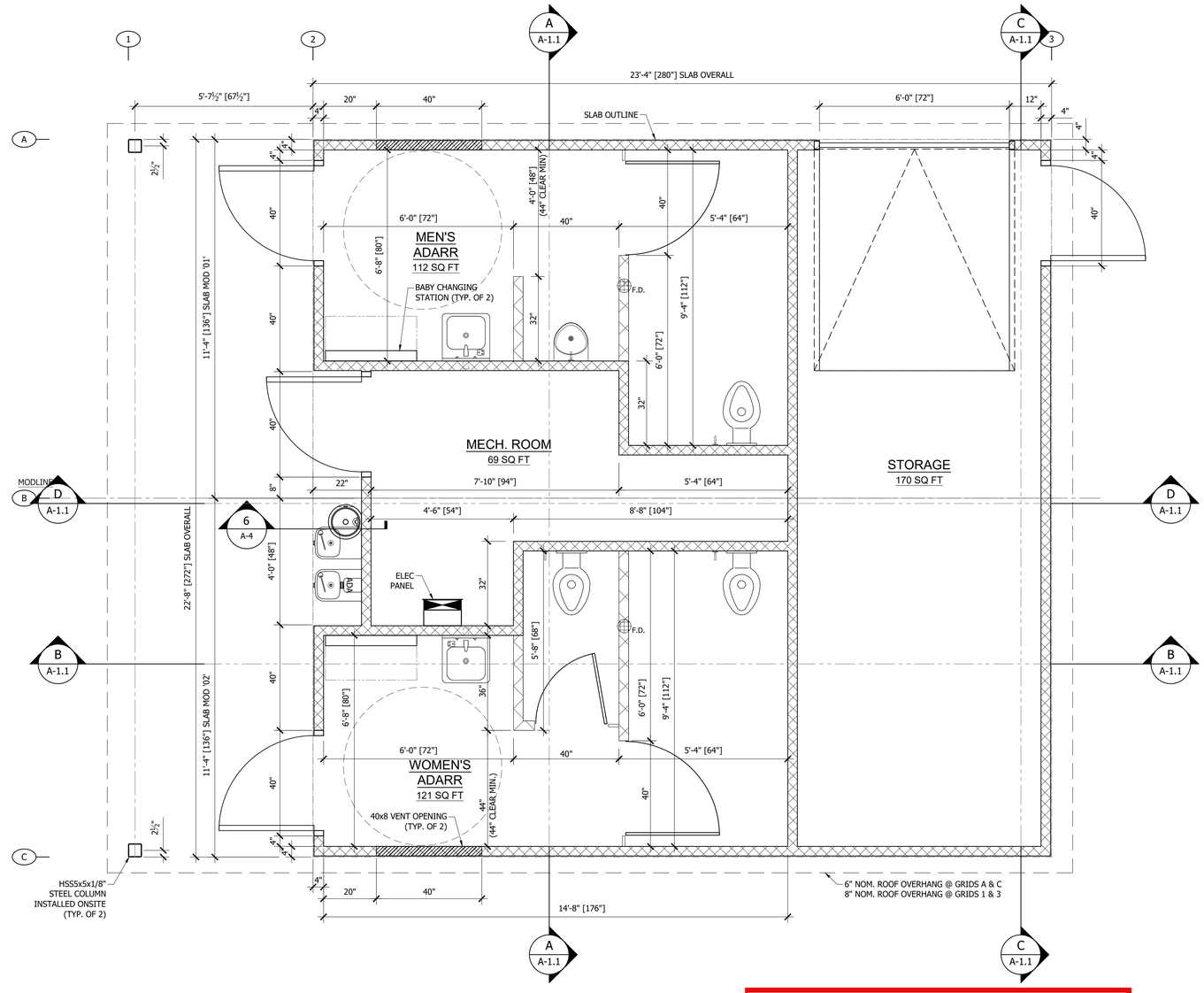

BUILDING LAYOUT NOTES:
1. SLAB SIZE IS SLIGHTLY LARGER THAN BUILDING SIZE.
2. BUILDING SIZE IS DETERMINED BY INTERIOR DIMENSIONS OF THE RESTROOMS. DIMENSIONS ARE FACE OF BLOCK TO FACE OF BLOCK OR FACE OF OSB.
3. START LAYOUT BY MEASURING 4" IN FROM EDGE OF SLAB (AFTER VERIFYING SLAB IS CORRECT). THIS WILL BE THE INSIDE FACE OF THE EXTERIOR BLOCK WALLS.

FLOOR PLAN

1/2" = 1'-0"

APPROVED: STATE OF CA - CERTIFIED DAA

Based on the requirements of title 25 California code of regulations
Chapter 3 subchapter 2 Commercial Modular

Date: 3/30/2026 Expires: 6/30/2027

Approval # PFS: 26-003092

THIS APPROVAL DOES NOT AUTHORIZE OR APPROVE ANY OMISSION OR DEVIATION FROM THE REQUIREMENTS OF STATE LAWS OR APPLICABLE LOCAL ORDINANCES . THIS APPROVAL IS LIMITED TO FACTORY-BUILT PORTION ONLY.

PFS CORPORATION - Los Angeles, CA

NOTE:
FLOOR SLOPE SHALL NOT EXCEED 1:48 IN ACCORDANCE WITH CBC 11B-403.3.

03/25/2026

REGISTERED PROFESSIONAL ENGINEER
ROCK M. SHETLER
59228
CIVIL
STATE OF CALIFORNIA

DATE	REV#	REVISION	BY	DATE	REV#	REVISION	BY

Blazer Modular Construction
P.O. BOX 489
945 Olney St. ■ Aumsville, OR 97325-0489
www.blazermodular.com

COPYRIGHT 2026, BLAZER MODULAR CONSTRUCTION AND PUBLIC RESTROOM COMPANY. THIS MATERIAL IS THE EXCLUSIVE PROPERTY OF BLAZER MODULAR CONSTRUCTION AND PUBLIC RESTROOM COMPANY AND SHALL NOT BE REPRODUCED, USED, OR DISCLOSED TO OTHERS EXCEPT AS AUTHORIZED BY THE WRITTEN PERMISSION OF BLAZER MODULAR CONSTRUCTION OR PUBLIC RESTROOM COMPANY.

PUBLIC RESTROOM COMPANY
Building Better Places To Go.
Ph: 888-888-2060 | Fax: 888-888-1448

PROJECT NAME & LOCATION:
SIERRA CREEK PARK
NORTH HIGHLANDS, CA

SHEET TITLE:
FLOOR PLAN & DOOR & DESIGN SCHEDULES

Approved for Const:	
File Copy:	
Drawn By:	RLD
Issue Date:	03/25/2026
Job No:	20702

A-1

R:\2026 Drawings\Restroom Buildings\20702 Sierra Creek Park – CA\20702 Sierra Creek Park.dwg, A-1, 3/25/2026 1:42:40 PM

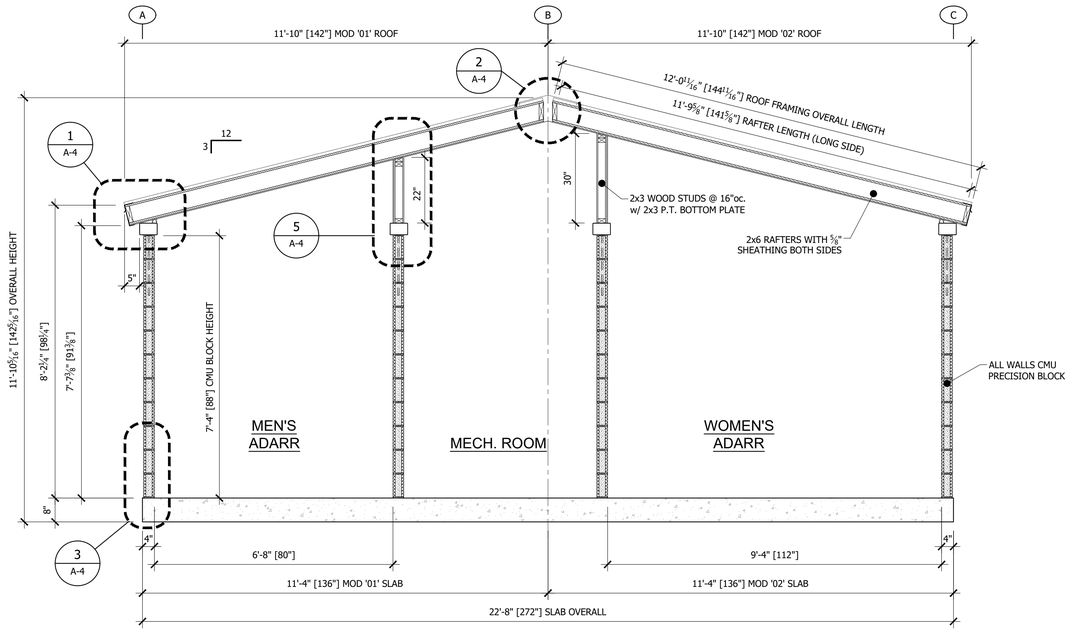

SECTION - A A

1/2" = 1'-0"

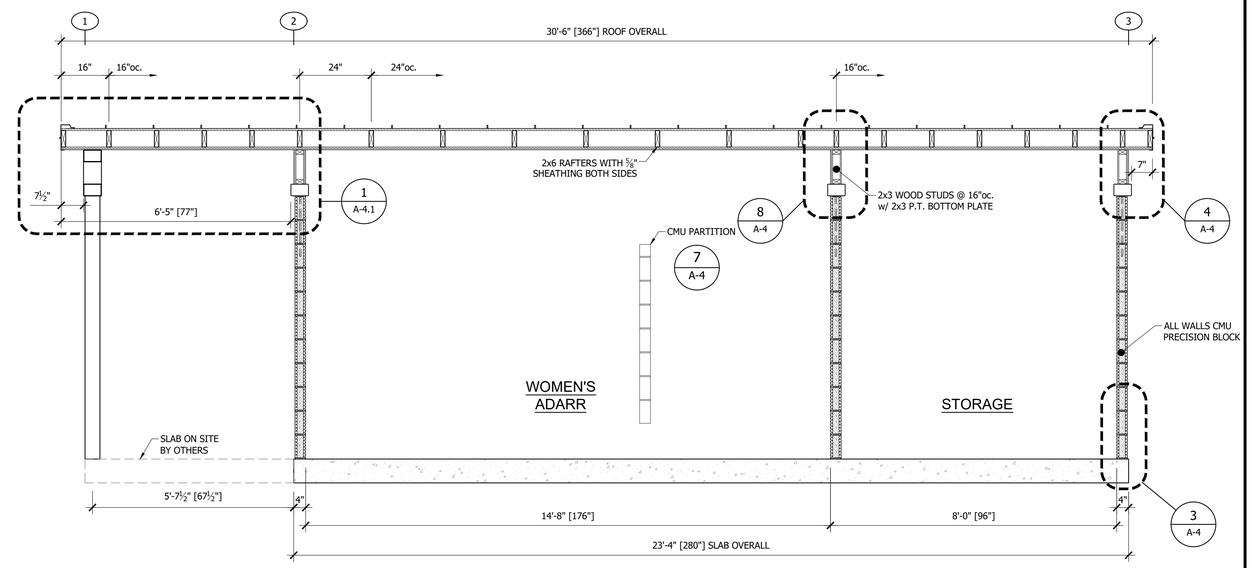

SECTION - B B

1/2" = 1'-0"

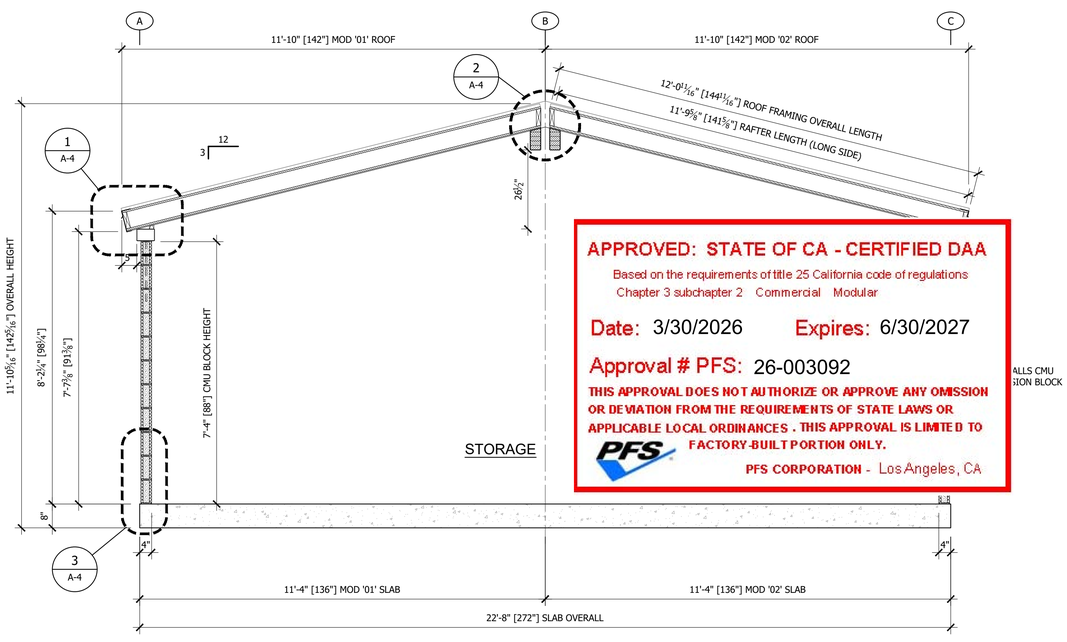

APPROVED: STATE OF CA - CERTIFIED DAA

Based on the requirements of title 25 California code of regulations
Chapter 3 subchapter 2 Commercial Modular

Date: 3/30/2026 Expires: 6/30/2027

Approval # PFS: 26-003092

THIS APPROVAL DOES NOT AUTHORIZE OR APPROVE ANY OMISSION OR DEVIATION FROM THE REQUIREMENTS OF STATE LAWS OR APPLICABLE LOCAL ORDINANCES . THIS APPROVAL IS LIMITED TO FACTORY-BUILT PORTION ONLY.

PFS CORPORATION - Los Angeles, CA

SECTION - C C

1/2" = 1'-0"

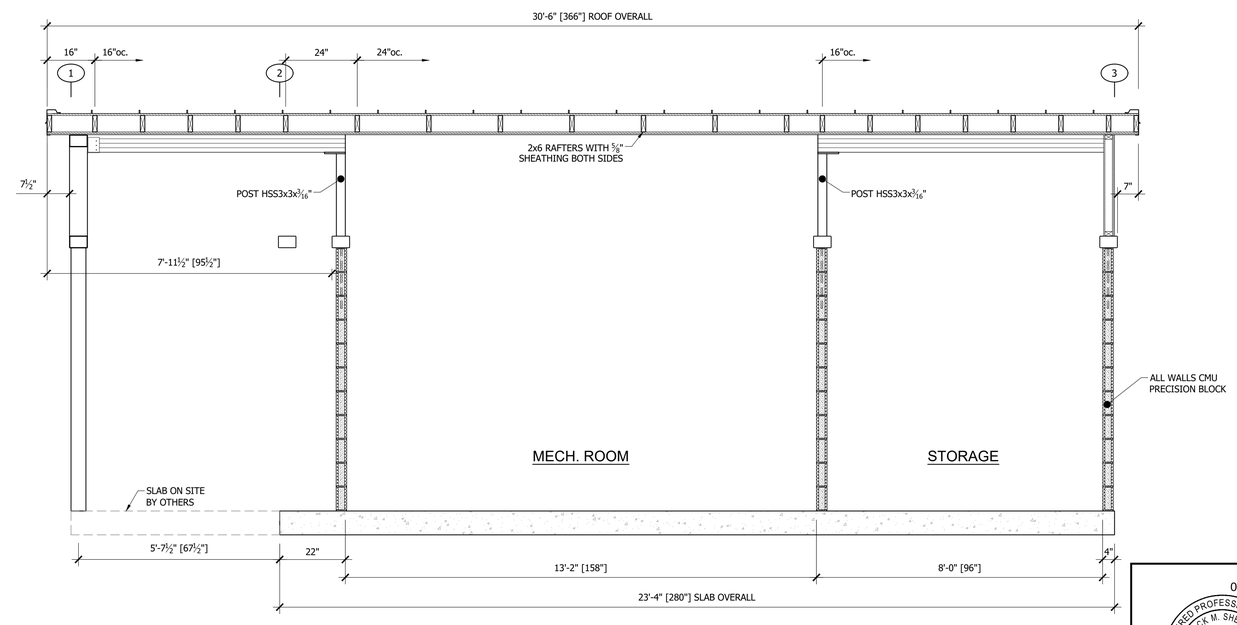

SECTION - D D

1/2" = 1'-0"

03/25/2026

REGISTERED PROFESSIONAL ENGINEER
ROCK M. SHETLER
59228
CIVIL
STATE OF CALIFORNIA

DATE	REV#	REVISION	BY	DATE	REV#	REVISION	BY

Blazer Modular Construction
P.O. BOX 489 945 Olney St. ■ Aumsville, OR 97325-0489
www.blazermodular.com

COPYRIGHT 2026, BLAZER MODULAR CONSTRUCTION AND PUBLIC RESTROOM COMPANY. THIS MATERIAL IS THE EXCLUSIVE PROPERTY OF BLAZER MODULAR CONSTRUCTION AND PUBLIC RESTROOM COMPANY AND SHALL NOT BE REPRODUCED, USED, OR DISCLOSED TO OTHERS EXCEPT AS AUTHORIZED BY THE WRITTEN PERMISSION OF BLAZER MODULAR CONSTRUCTION OR PUBLIC RESTROOM COMPANY.

PUBLIC RESTROOM COMPANY
Building Better Places To Go.
Ph: 888-888-2060 | Fax: 888-888-1448

PROJECT NAME & LOCATION:
SIERRA CREEK PARK
NORTH HIGHLANDS, CA

SHEET TITLE:
SECTIONS

Approved for Const:
File Copy:
Drawn By: RLD
Issue Date: 03/25/2026

Job No: 20702

A-1.1

R:\2026 Drawings\Restroom Buildings\20702 Sierra Creek Park - CA\20702 Sierra Creek Park.dwg, A-1.1, 3/25/2026 1:42:42 PM

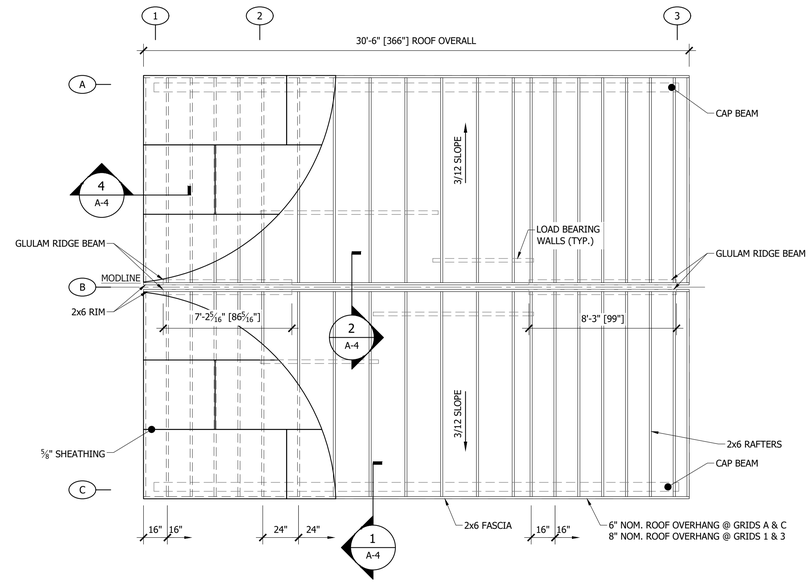

ROOF FRAMING PLAN

1/4" = 1'-0"

APPROVED: STATE OF CA - CERTIFIED DAA

Based on the requirements of title 25 California code of regulations
Chapter 3 subchapter 2 Commercial Modular

Date: 3/30/2026 **Expires:** 6/30/2027

Approval # PFS: 26-003092

THIS APPROVAL DOES NOT AUTHORIZE OR APPROVE ANY OMISSION OR DEVIATION FROM THE REQUIREMENTS OF STATE LAWS OR APPLICABLE LOCAL ORDINANCES . THIS APPROVAL IS LIMITED TO FACTORY-BUILT PORTION ONLY.

PFS

PFS CORPORATION - Los Angeles, CA

03/25/2026

REGISTERED PROFESSIONAL ENGINEER
ROCK M. SHETLER
59228
CIVIL
STATE OF CALIFORNIA

DATE	REV#	REVISION	BY	DATE	REV#	REVISION	BY

Blazer Modular Construction
P.O. BOX 489
945 Olney St. ■ Aumsville, OR 97325-0489
www.blazermodular.com

COPYRIGHT 2026, BLAZER MODULAR CONSTRUCTION AND PUBLIC RESTROOM COMPANY. THIS MATERIAL IS THE EXCLUSIVE PROPERTY OF BLAZER MODULAR CONSTRUCTION AND PUBLIC RESTROOM COMPANY AND SHALL NOT BE REPRODUCED, USED, OR DISCLOSED TO OTHERS EXCEPT AS AUTHORIZED BY THE WRITTEN PERMISSION OF BLAZER MODULAR CONSTRUCTION OR PUBLIC RESTROOM COMPANY.

PUBLIC RESTROOM COMPANY
Building Better Places To Go.
Ph: 888-888-2060 | Fax: 888-888-1448

PROJECT NAME & LOCATION:
SIERRA CREEK PARK
NORTH HIGHLANDS, CA

SHEET TITLE:
ROOF FRAMING PLAN

Approved for Const:	
File Copy:	
Drawn By:	RLD
Issue Date:	03/25/2026
Job No:	20702

A-1.2

R:\2026 Drawings\Restroom Buildings\20702 Sierra Creek Park - CA\20702 Sierra Creek Park.dwg, A-1.2, 3/25/2026 1:42:44 PM

EXTERIOR FINISH SCHEDULE		
	DESCRIPTION	FINISH
WALLS		
TO 7'-4"	STUC-O-FLEX OVER CMU PRECISION BLOCK	1 COAT PRIMER, 2 COATS PAINT
WALL VENTS	STAINLESS STEEL WIRE MESH (1"x1"x3/16")	1 COAT PRIMER, 2 COATS PAINT
VENT SUPPORT	STAINLESS STEEL CHANNEL	TOP ONLY
CAP BEAM	STEEL	1 COAT PRIMER, 2 COATS PAINT
ABOVE CAP BEAM		
GABLE SIDING	STUC-O-FLEX FINISH OVER SMOOTH FRC OVER BUILDING WRAP	1 COAT PRIMER, 2 COATS PAINT
GABLE VENTS	STAINLESS STEEL WIRE MESH (1"x1"x3/16")	
VENT SUPPORT ANGLE	MILD STEEL	1 COAT PRIMER, 2 COATS PAINT
VENT SURROUND	5/4 x 6 FRC	1 COAT PRIMER, 2 COATS PAINT
CAULK (SITE INSTALL)	MODLINE w/ BACKER ROD AS REQUIRED, WHERE APPLICABLE	WHERE APPLICABLE
LOUVERED VENT	1 EXTERIOR	
ROOF		
ROOFING	26 ga. STANDING SEAM METAL SALES 16" IMAGE II w/ MINOR RIBS	NOTE: OVER SINGLE LAYER PEEL & STICK HT UNDERLAYMENT
RIDGE CAP (SITE INSTALLED)	METAL SALES	
FALL PROTECTION	GUARDIAN 00500	
SOFFITS	STUC-O-FLEX FINISH OVER SMOOTH CEMENT BOARD	1 COAT PRIMER, 2 COATS PAINT
FASCIA	16ga FORMED METAL (L SHAPED)	1 COAT PRIMER, 2 COATS PAINT
DOORS		
ALL DOORS AND FRAMES	GALVANIZED HOLLOW METAL	1 COAT PRIMER, 2 COATS PAINT

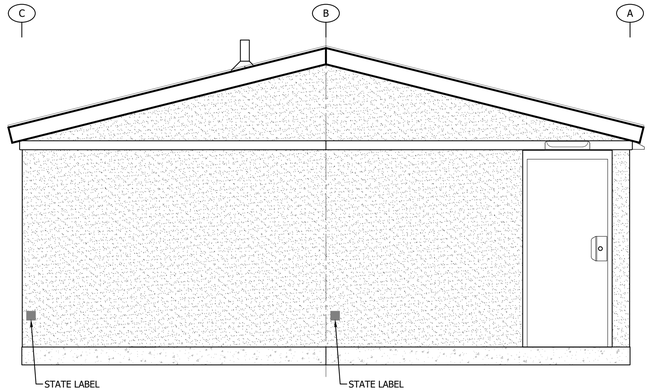

WALL 3

GWA=202sf

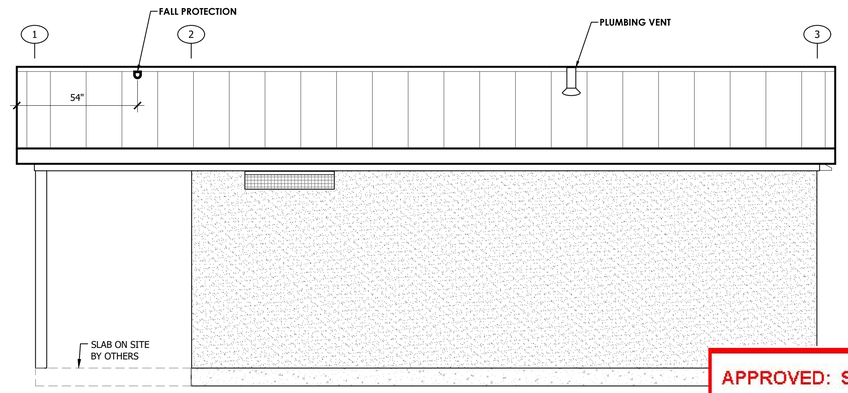

WALL C

GWA=177sf

APPROVED: STATE OF CA - CERTIFIED DAA

Based on the requirements of title 25 California code of regulations
Chapter 3 subchapter 2 Commercial Modular

Date: 3/30/2026 Expires: 6/30/2027

Approval # PFS: 26-003092

THIS APPROVAL DOES NOT AUTHORIZE OR APPROVE ANY OMISSION OR DEVIATION FROM THE REQUIREMENTS OF STATE LAWS OR APPLICABLE LOCAL ORDINANCES . THIS APPROVAL IS LIMITED TO FACTORY-BUILT PORTION ONLY.

PFS CORPORATION - Los Angeles, CA

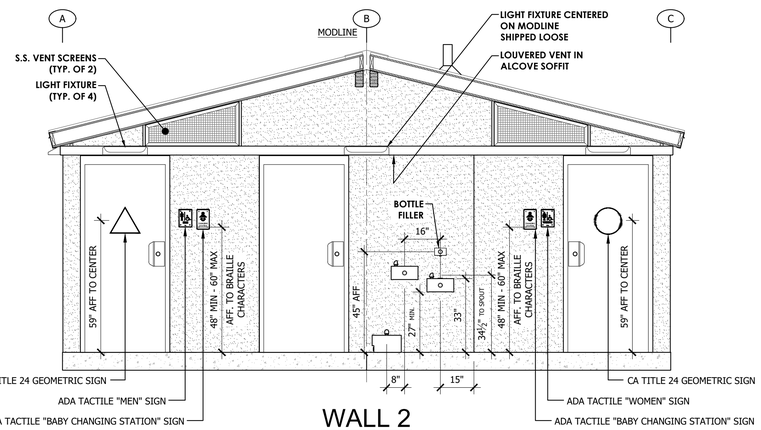

WALL 2

GWA=202sf

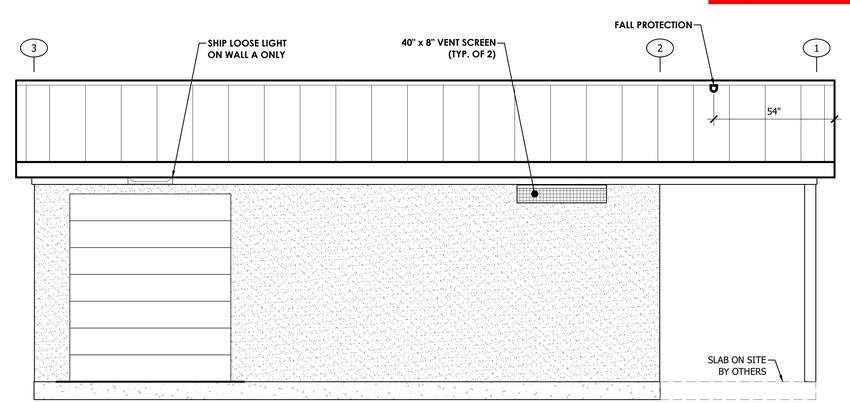

WALL A

GWA=177sf

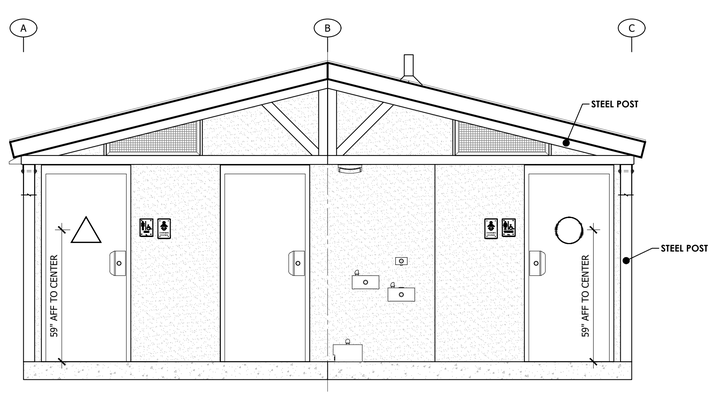

WALL 1

EXTERIOR ELEVATIONS

3/8" = 1'-0"

03/25/2026

REGISTERED PROFESSIONAL ENGINEER ROCK M. SHETLER 59228 CIVIL STATE OF CALIFORNIA

DATE	REV#	REVISION	BY	DATE	REV#	REVISION	BY

Blazer Modular Construction
P.O. BOX 489 www.blazermodular.com
945 Olney St. ■ Aumsville, OR 97325-0489

COPYRIGHT 2026, BLAZER MODULAR CONSTRUCTION AND PUBLIC RESTROOM COMPANY. THIS MATERIAL IS THE EXCLUSIVE PROPERTY OF BLAZER MODULAR CONSTRUCTION AND PUBLIC RESTROOM COMPANY AND SHALL NOT BE REPRODUCED, USED, OR DISCLOSED TO OTHERS EXCEPT AS AUTHORIZED BY THE WRITTEN PERMISSION OF BLAZER MODULAR CONSTRUCTION OR PUBLIC RESTROOM COMPANY.

PUBLIC RESTROOM COMPANY
Building Better Places To Go.
Ph: 888-888-2060 | Fax: 888-888-1448

PROJECT NAME & LOCATION:
SIERRA CREEK PARK
NORTH HIGHLANDS, CA

SHEET TITLE:
EXTERIOR ELEVATIONS & EXT. FINISH SCHEDULE

Approved for Const:
File Copy:
Drawn By: RLD
Issue Date: 03/25/2026

Job No: 20702

A-2

R:\2026 Drawings\Restroom Buildings\20702 Sierra Creek Park - CA\20702 Sierra Creek Park.dwg, A-2Ext, 3/25/2026 1:42:45 PM

ACCESSORIES

MOUNT WITH VANDAL RESISTANT SS SCREWS.

DESCRIPTION	QTY	SIZE/STYLE	MANUFACTURER/ITEM #	FINISH / COLOR / STYLE	NOTES
GRAB BAR	2	42"	ADA COMPLIANT	S.S.	34" A.F.F. TO CENTER
GRAB BAR	2	48"	ADA COMPLIANT	S.S.	34" A.F.F. TO CENTER
SIGNS:					
ISA3 GEOMETRIC-MEN'S	1	12" TRIANGLE	SIGN ELEMENTS TYPE "H"	ALUMINUM BLUE	59" TO CENTER
ISA3 GEOMETRIC-WOMEN'S	1	12" CIRCLE	SIGN ELEMENTS TYPE "E"	ALUMINUM BLUE	59" TO CENTER
ADA TACTILE ROOM ID MEN'S	1	RECTANGULAR 6" x 9"	SIGN ELEMENTS TYPE "A"	ALUMINUM BLUE	64" TO TOP
ADA TACTILE ROOM ID WOMEN'S	1	RECTANGULAR 6" x 9"	SIGN ELEMENTS TYPE "B"	ALUMINUM BLUE	64" TO TOP
BABY CHANGING STATION	2	RECTANGULAR 6" x 9"	SIGN ELEMENTS TYPE "N"	ALUMINUM BLUE	64" TO TOP
TP HOLDER	3	VANDAL RESISTANT 3-ROLL	ROYCE ROLLS TP-3	S.S.	30" A.F.F. TO TOP
TOILET PARTITION	3	4" CMU PRECISION BLOCK		PITTSBURGH PITT-TECH/PURE WHITE	2 COATS BLOCK FILLER, 2 COATS PAINT
URINAL SCREEN	1	4" CMU PRECISION BLOCK		PITTSBURGH PITT-TECH/PURE WHITE	2 COATS BLOCK FILLER, 2 COATS PAINT
BABY CHANGING STATION	2	HORIZONTAL	FOUNDATIONS 200-EH-1	POLY	28" TO BOTTOM
HAND DRYER	2	REMOTE POWER ELECTRIC	FASTAIRE HD03 (S)	ALUMINUM	40" TO CONTROLS (MAX.)
SOAP DISPENSER	2	REMOTE RESERVOIR	NINTH INNING	S.S.	
SOAP DISPENSER	2	VALVE	ASI #353 THRU WALL VALVE	S.S.	
UTLITY HOOK	3	SURFACE MOUNT	BOBRICK B-670	S.S.	47" TO HOOK (MAX.)
OTHER SPECIALTY ITEMS					
LOUVERED VENT	1	16" x 8"	SUNVENT INDUSTRIES #157 FL	ALUMINUM	IN ALCOVE SOFFIT

NOTES:

1. INTERIOR ELEVATIONS REFLECT ACTUAL DIMENSIONS THAT WILL BE USED. SEE AC SHEET FOR CODE CRITERIA.
2. VERTICAL DIMENSIONS ARE FROM TOP OF FINISHED FLOOR UNLESS NOTED OTHERWISE.
3. ISA: INTERNATIONAL SYMBOL OF ACCESSIBILITY, REQUIRED SIGNAGE FOR ACCESSIBLE RESTROOMS.

INTERIOR FINISH SCHEDULE

	DESCRIPTION	FINISH	BRAND / COLOR	NOTES
FLOOR:				
ENTIRE BUILDING EXCEPT ALCOVE	CONCRETE	SMOOTH FINISH w/ 2 PART EPOXY	EPOXY CROWN OR EQUAL PRO 7072SC w/ MEDIUM GRAY & CHIPS	2 COATS
ALCOVE ONLY	CONCRETE	LIGHT BROOM	NATURAL	
WALL:				
RESTROOM TO 7'-4"	CMU BLOCK	PAINT	PITTSBURGH PITT-TECH/PURE WHITE	2 COATS BLOCK FILLER, 2 COATS PAINT
CAP BEAM	STEEL	PAINT	PITTSBURGH PITT-TECH/PURE WHITE	1 COAT PRIMER, 2 COATS PAINT
ABOVE CAP BEAM	JAMES HARDIE FRC MOUNDED SAND PATTERN	PAINT	PITTSBURGH PITT-TECH/PURE WHITE	1 COAT PRIMER, 2 COATS PAINT
MECHANICAL TO 7'-4"	CMU BLOCK	PAINT	PITTSBURGH PITT-TECH/PURE WHITE	1 COAT BLOCK FILLER, 1 COAT PAINT
CAP BEAM	STEEL	PAINT	PITTSBURGH PITT-TECH/PURE WHITE	1 COAT PRIMER, 2 COATS PAINT
ABOVE CAP BEAM	OSB	PAINT	PITTSBURGH PITT-TECH/PURE WHITE	1 COAT PRIMER, 2 COATS PAINT
CEILING:				
ALL ROOMS	JAMES HARDIE FRC MOUNDED SAND PATTERN	PAINT	PITTSBURGH PITT-TECH/PURE WHITE	1 COAT PRIMER, 2 COATS PAINT

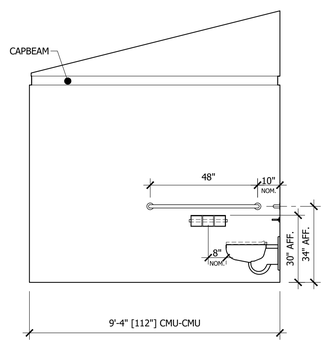

MEN'S ADARR (A)
3/8" = 1'-0"

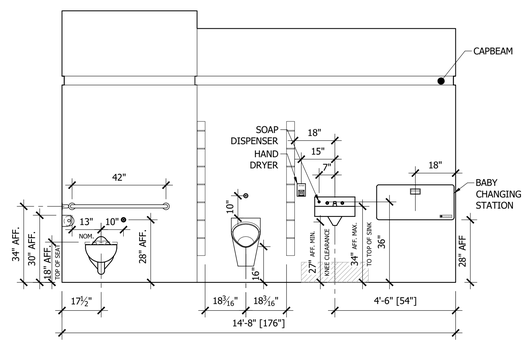

MEN'S ADARR (B)
3/8" = 1'-0"

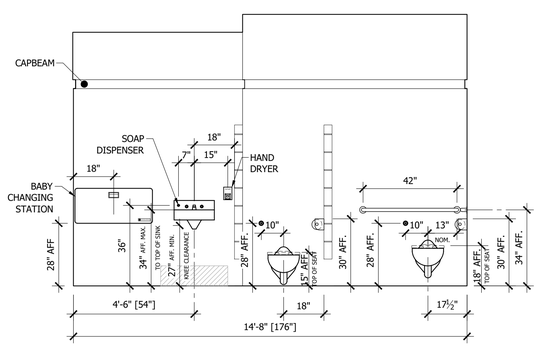

WOMEN'S ADARR (C)
3/8" = 1'-0"

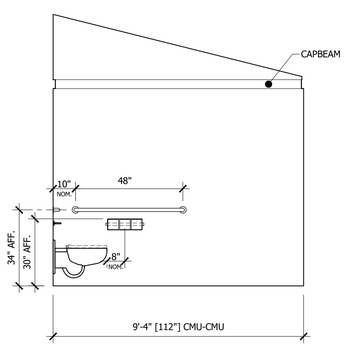

WOMEN'S ADARR (D)
3/8" = 1'-0"

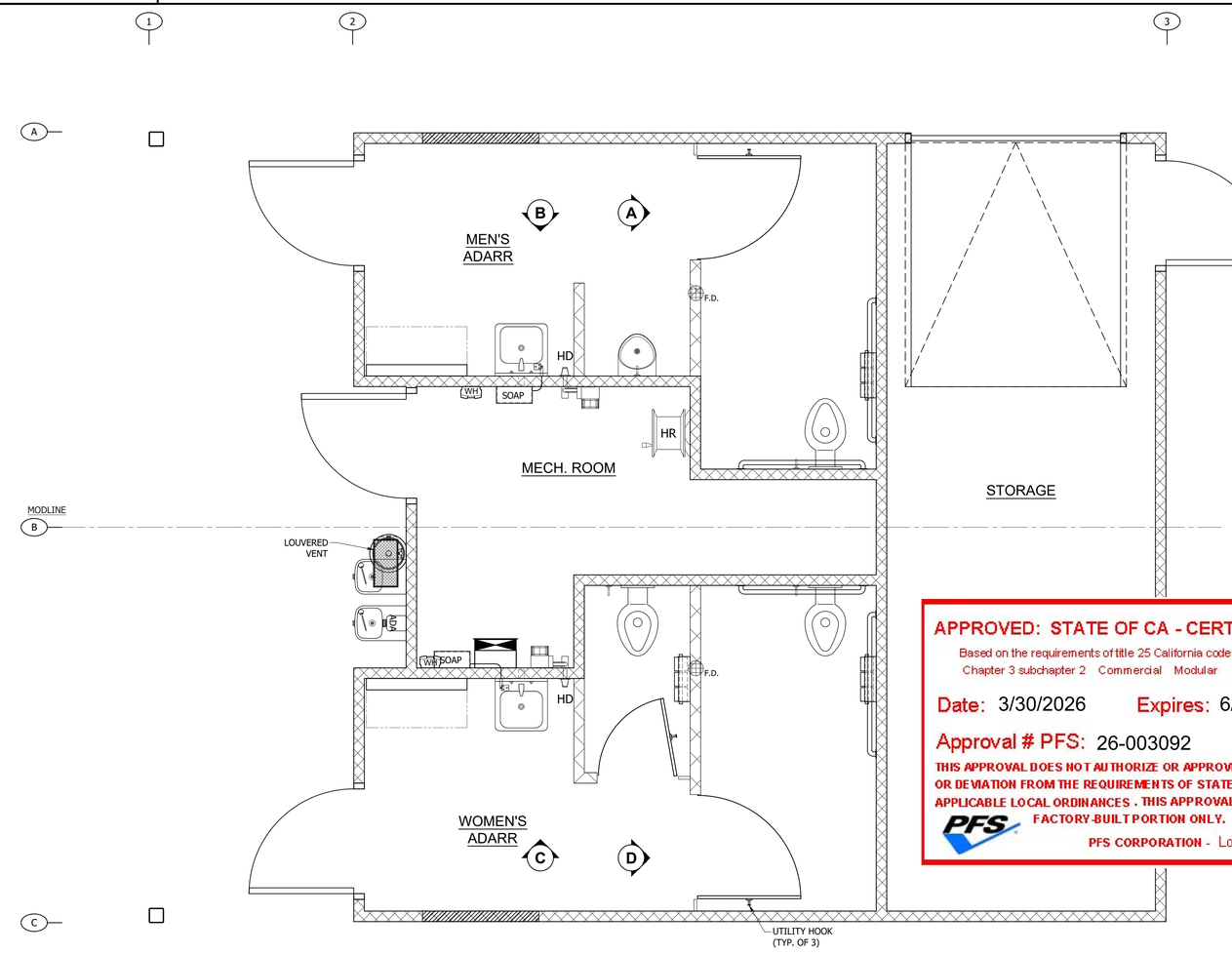

APPROVED: STATE OF CA - CERTIFIED DAA

Based on the requirements of title 25 California code of regulations
Chapter 3 subchapter 2 Commercial Modular

Date: 3/30/2026 Expires: 6/30/2027

Approval # PFS: 26-003092

THIS APPROVAL DOES NOT AUTHORIZE OR APPROVE ANY OMISSION OR DEVIATION FROM THE REQUIREMENTS OF STATE LAWS OR APPLICABLE LOCAL ORDINANCES . THIS APPROVAL IS LIMITED TO FACTORY-BUILT PORTION ONLY.

PFS CORPORATION - Los Angeles, CA

INTERIOR LAYOUT
1/2" = 1'-0"

DATE	REV#	REVISION	BY	DATE	REV#	REVISION	BY

Blazer Modular Construction
P.O. BOX 489
945 Olney St. ■ Aumsville, OR 97325-0489
www.blazermodular.com

COPYRIGHT 2026, BLAZER MODULAR CONSTRUCTION AND PUBLIC RESTROOM COMPANY. THIS MATERIAL IS THE EXCLUSIVE PROPERTY OF BLAZER MODULAR CONSTRUCTION AND PUBLIC RESTROOM COMPANY AND SHALL NOT BE REPRODUCED, USED, OR DISCLOSED TO OTHERS EXCEPT AS AUTHORIZED BY THE WRITTEN PERMISSION OF BLAZER MODULAR CONSTRUCTION OR PUBLIC RESTROOM COMPANY.

PUBLIC RESTROOM COMPANY
Building Better Places To Go.
Ph: 888-888-2060 | Fax: 888-888-1448

PROJECT NAME & LOCATION:
SIERRA CREEK PARK
NORTH HIGHLANDS, CA

SHEET TITLE:
INT ELEVATIONS, LAYOUT, FINISH & ACC. SCHEDULES

Approved for Const:	
File Copy:	
Drawn By:	RLD
Issue Date:	03/25/2026
Job No:	20702

A-3

R:\2026 Drawings\Restroom Buildings\20702 Sierra Creek Park - CA\20702 Sierra Creek Park.dwg, A-3int, 3/25/2026 1:42:48 PM

MIN. NUMBER OF ANCHORS PER WALL SPACING NOT TO EXCEED 48"oc.	
WALL	NUMBER
WALL A	3
WALL C	3
INT. WALLS	3
WALL 2	3
WALL 3	3

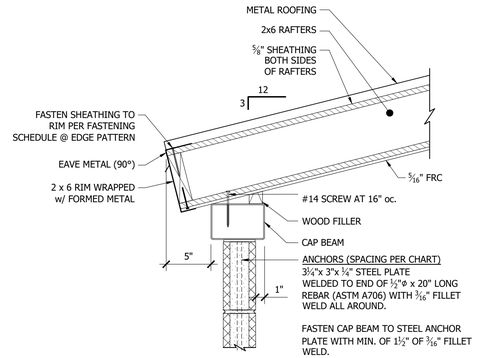

1 EAVE DETAIL

1 1/2" = 1'-0"

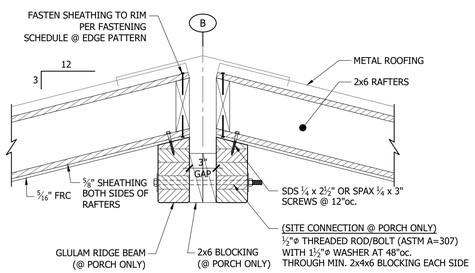

2 RIDGE DETAIL

1 1/2" = 1'-0"

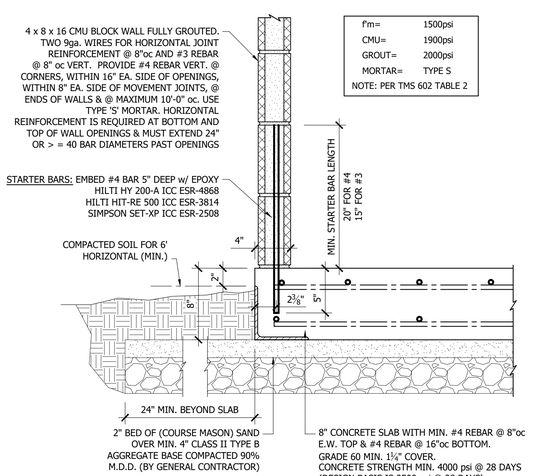

f'm=	1500psi
CMU=	1900psi
GROUT=	2000psi
MORTAR=	TYPE S
NOTE: PER TMS 602 TABLE 2	

3 SLAB & WALL DETAILS

1 1/2" = 1'-0"

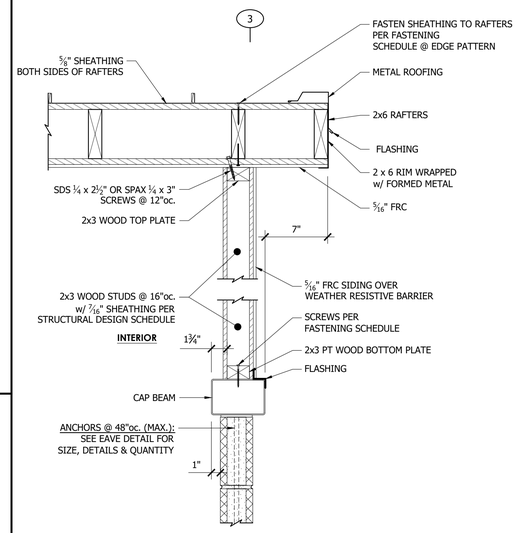

4 GABLE EAVE DETAIL

1 1/2" = 1'-0"

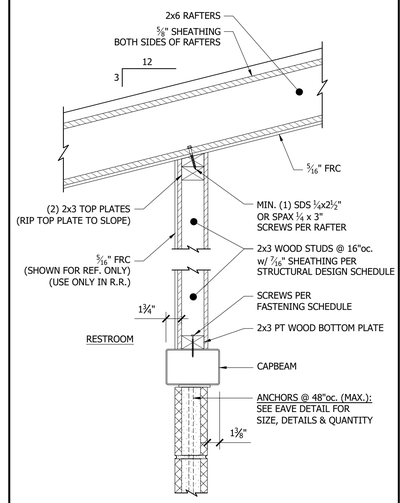

5 INTERIOR WALL DETAIL

1 1/2" = 1'-0"

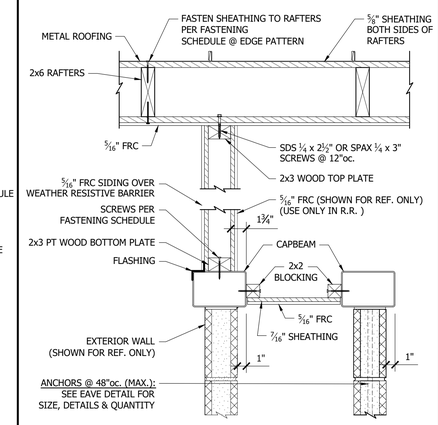

6 GABLE EAVE DETAIL @ ALCOVE

1 1/2" = 1'-0"

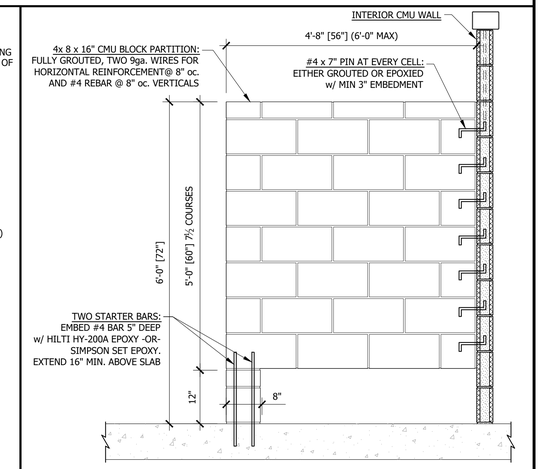

7 PARTITION WALL DETAIL

3/4" = 1'-0"

FASTENING SCHEDULE	
WOOD FRAMED WALLS	
WOOD FRAMING STUDS-TO-TOP & BOTTOM PLATES	(2) 0.131"x 3" NAILS
SHEATHING-TO-INTERIOR FRAMING (BOTH SIDES)	16ga. x 1 1/2" STAPLE (SENCO N17) @ 6"oc EDGE, 12"oc FIELD
GABLE END WALLS (BOTH SIDES)	16ga. x 1 1/2" STAPLE (SENCO N17) @ 6"oc EDGE, 12"oc FIELD
BOTTOM PLATE-TO-CAP BEAM (EXTERIOR WALLS)	#12 SCREWS @ 8"oc
ROOF	
RAFTERS -TO- RIMS	MIN. OF (3) 0.131 x 3" NAILS (END GRAIN)
SHEATHING -TO- RAFTERS	0.113x2 3/8" NAILS @ 6" oc. EDGE, 12" oc. FIELD. LONG AXIS PERPENDICULAR TO FRAMING, OFFSET PANEL ENDS 4'. BLOCK PANEL EDGES OF PIECES LESS THAN 24" WIDE.
ROOFING FASTENING	
ROOFING-TO-SHEATHING (16" WIDE PANELS)	#8-18 TRUSS HEAD WOOD SCREWS. 12"OC. @ PANEL EDGES WITHIN 3'-0" OF ROOF SIDES. 24"OC. @ PANEL EDGES FOR REMAINDER OF ROOF.

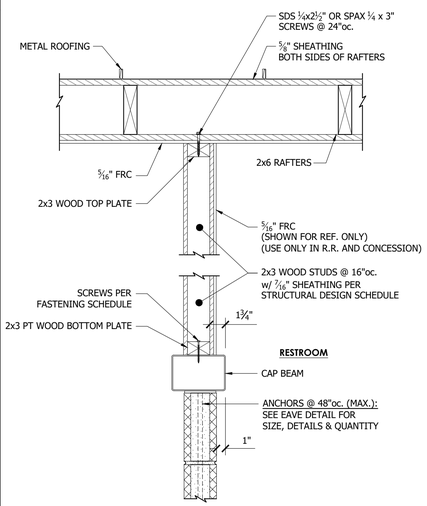

8 INTERIOR WALL DETAIL

1 1/2" = 1'-0"

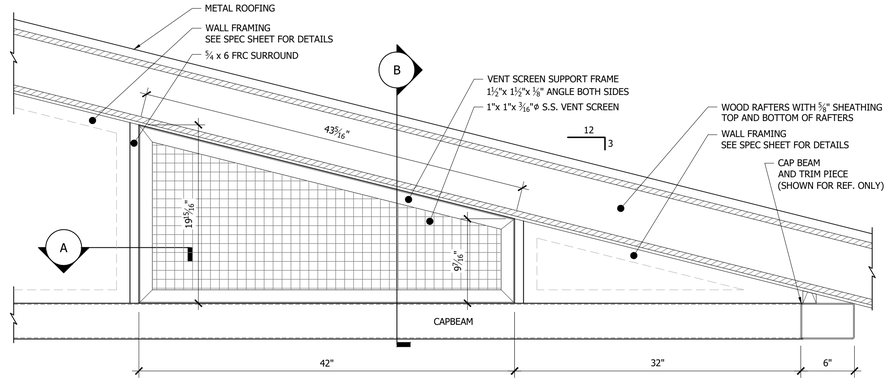

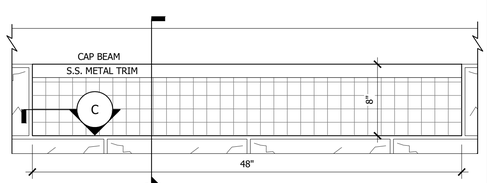

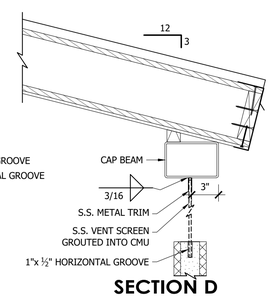

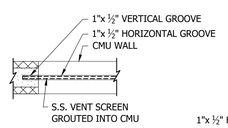

SECTION C

SECTION D

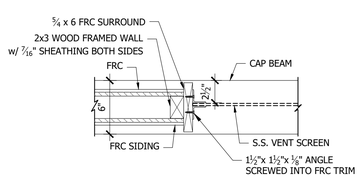

SECTION A

NOTE: OUTER SCREEN TRIM MUST NOT BE SCREWED THROUGH CAP BEAM SO AS TO PREVENT WATER INTRUSION.

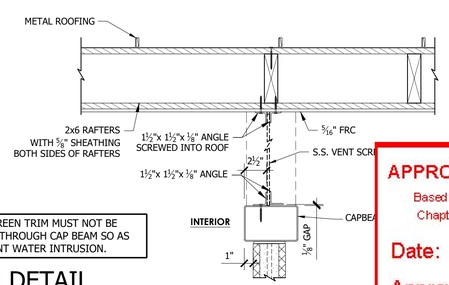

SECTION B

9 VENT SCREEN DETAIL

1 1/2" = 1'-0"

APPROVED: STATE OF CA - CERTIFIED DAA

Based on the requirements of title 25 California code of regulations
Chapter 3 subchapter 2 Commercial Modular

Date: 3/30/2026 Expires: 6/30/2027

Approval # PFS: 26-003092

THIS APPROVAL DOES NOT AUTHORIZE OR APPROVE ANY OMISSION OR DEVIATION FROM THE REQUIREMENTS OF STATE LAWS OR APPLICABLE LOCAL ORDINANCES . THIS APPROVAL IS LIMITED TO FACTORY-BUILT PORTION ONLY.

PFS CORPORATION - Los Angeles, CA

03/25/2026

REGISTERED PROFESSIONAL ENGINEER ROCK M. SHETLER 59228 CIVIL STATE OF CALIFORNIA

DATE	REV#	REVISION	BY	DATE	REV#	REVISION	BY

Blazer Modular Construction
P.O. BOX 489
945 Olney St. ■ Aumsville, OR 97325-0489
www.blazermodular.com

COPYRIGHT 2026, BLAZER MODULAR CONSTRUCTION AND PUBLIC RESTROOM COMPANY. THIS MATERIAL IS THE EXCLUSIVE PROPERTY OF BLAZER MODULAR CONSTRUCTION AND PUBLIC RESTROOM COMPANY AND SHALL NOT BE REPRODUCED, USED, OR DISCLOSED TO OTHERS EXCEPT AS AUTHORIZED BY THE WRITTEN PERMISSION OF BLAZER MODULAR CONSTRUCTION OR PUBLIC RESTROOM COMPANY.

PUBLIC RESTROOM COMPANY
Building Better Places To Go.
Ph: 888-888-2060 | Fax: 888-888-1448

PROJECT NAME & LOCATION:

SIERRA CREEK PARK
NORTH HIGHLANDS, CA

Job No: 20702

RLD
5/2026

A-4

R:\2026 Drawings\Restroom Buildings\20702 Sierra Creek Park - CA\20702 Sierra Creek Park.dwg, A-4Det, 3/25/2026 1:42:50 PM

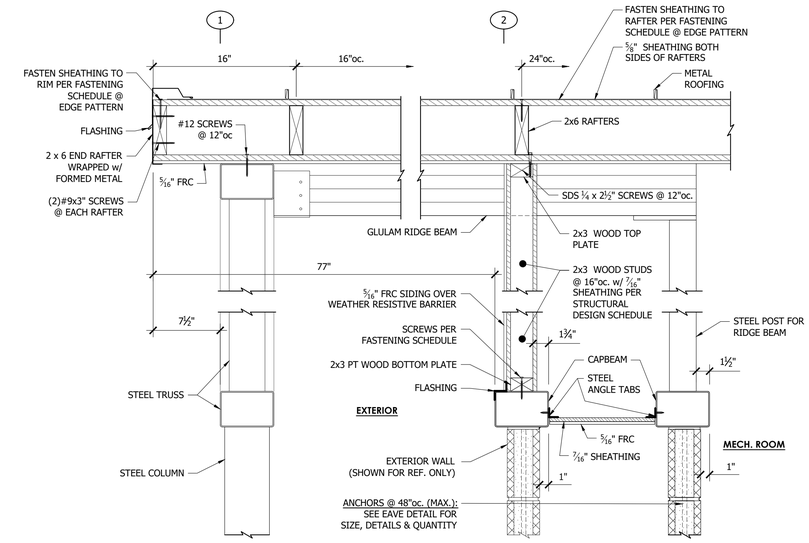

1 GABLE EAVE DETAIL @ GRID 1 & 2

1 1/2" = 1'-0"

20702 Sierra Creek Park

Natural Ventilation per CMC Section 402

Room Name	Az (sf)	4% (sf)	openings	check	notes
MEN'S ADARR	112	4.5	5.70	OK	
WOMEN'S ADARR	121	4.8	5.70	OK	

Section 402.2 - Natural Ventilation is provided through the permanently open vents and the undercut of the exterior door which have no sweep or threshold. The minimum permanently open area of these means of natural ventilation shall be ≥ 4% of the floor area.

APPROVED: STATE OF CA - CERTIFIED DAA

Based on the requirements of title 25 California code of regulations
Chapter 3 subchapter 2 Commercial Modular

Date: 3/30/2026 **Expires:** 6/30/2027

Approval # PFS: 26-003092

THIS APPROVAL DOES NOT AUTHORIZE OR APPROVE ANY OMISSION OR DEVIATION FROM THE REQUIREMENTS OF STATE LAWS OR APPLICABLE LOCAL ORDINANCES . THIS APPROVAL IS LIMITED TO FACTORY-BUILT PORTION ONLY.

PFS

PFS CORPORATION - Los Angeles, CA

03/25/2026

REGISTERED PROFESSIONAL ENGINEER
RUCK M. SHETLER
59228
CIVIL
STATE OF CALIFORNIA

DATE	REV#	REVISION	BY	DATE	REV#	REVISION	BY

Blazer Modular Construction
P.O. BOX 489 www.blazermodular.com
945 Olney St. ■ Aumsville, OR 97325-0489

COPYRIGHT 2026, BLAZER MODULAR CONSTRUCTION AND PUBLIC RESTROOM COMPANY. THIS MATERIAL IS THE EXCLUSIVE PROPERTY OF BLAZER MODULAR CONSTRUCTION AND PUBLIC RESTROOM COMPANY AND SHALL NOT BE REPRODUCED, USED, OR DISCLOSED TO OTHERS EXCEPT AS AUTHORIZED BY THE WRITTEN PERMISSION OF BLAZER MODULAR CONSTRUCTION OR PUBLIC RESTROOM COMPANY.

PUBLIC RESTROOM COMPANY
Building Better Places To Go.
Ph: 888-888-2060 | Fax: 888-888-1448

PROJECT NAME & LOCATION:
SIERRA CREEK PARK
NORTH HIGHLANDS, CA

SHEET TITLE:
DETAILS

Approved for Const:	
File Copy:	
Drawn By:	RLD
Issue Date:	03/25/2026
Job No:	20702

A-4.1

R:\2026 Drawings\Restroom Buildings\20702 Sierra Creek Park - CA\20702 Sierra Creek Park.dwg, A-4.1Det, 3/25/2026 1:42:52 PM

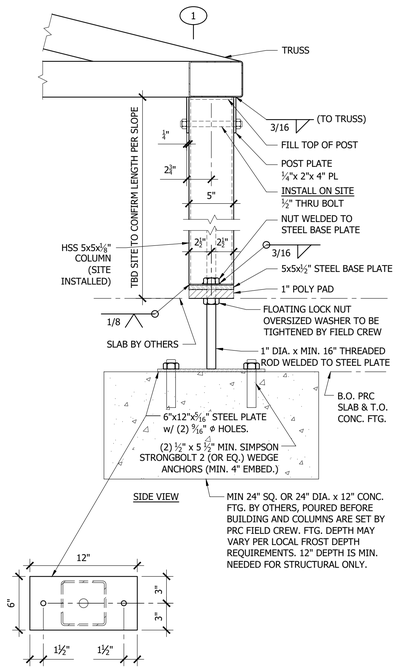

1 POST DETAIL
1 1/2" = 1'-0"

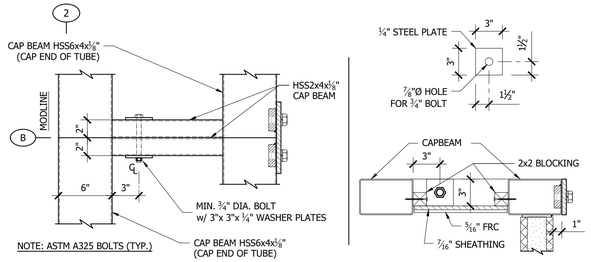

2 CAP BEAM CONNECTION @ ALCOVE
1 1/2" = 1'-0" SITE CONNECTION

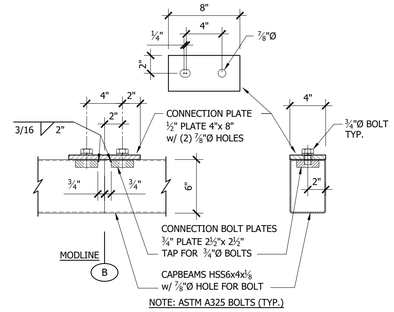

3 CAP BEAM CONNECTION
1 1/2" = 1'-0" SITE CONNECTION

NOTES:

#1 THIS DIMENSION IS FOR REFERENCE ONLY AND IS FROM THE INSIDE OF THE CAP BEAM TO THE INSIDE OF THE CMU BLOCK WALL.

#2 THIS DIMENSION IS FOR REFERENCE ONLY AND IS FROM THE INSIDE OF THE CAP BEAM TO THE INSIDE OF POSTS.

#3 ALL STEEL INTERSECTIONS WELDED WITH MIN. 3/16" FILLET FCAW-AWS 5.20 ALL AROUND OR ⅛" GROOVE WELD, UNLESS NOTED OTHERWISE.

#4 ALL STEEL PLATE IS ASTM A36.

#5 WELDING OPERATORS SHALL BE CERTIFIED FOR STRUCTURAL STEEL AND/OR REINFORCEMENT.

APPROVED: STATE OF CA - CERTIFIED DAA
Based on the requirements of title 25 California code of regulations
Chapter 3 subchapter 2 Commercial Modular
Date: 3/30/2026 Expires: 6/30/2027
Approval # PFS: 26-003092
THIS APPROVAL DOES NOT AUTHORIZE OR APPROVE ANY OMISSION OR DEVIATION FROM THE REQUIREMENTS OF STATE LAWS OR APPLICABLE LOCAL ORDINANCES . THIS APPROVAL IS LIMITED TO FACTORY-BUILT PORTION ONLY.
PFS CORPORATION - Los Angeles, CA

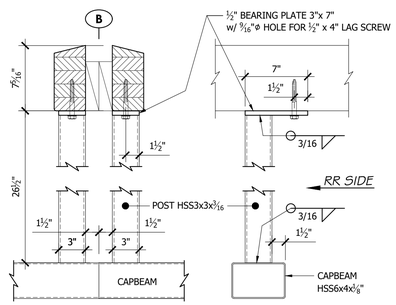

4 RIDGEBEAM POST DETAILS
1 1/2" = 1'-0"

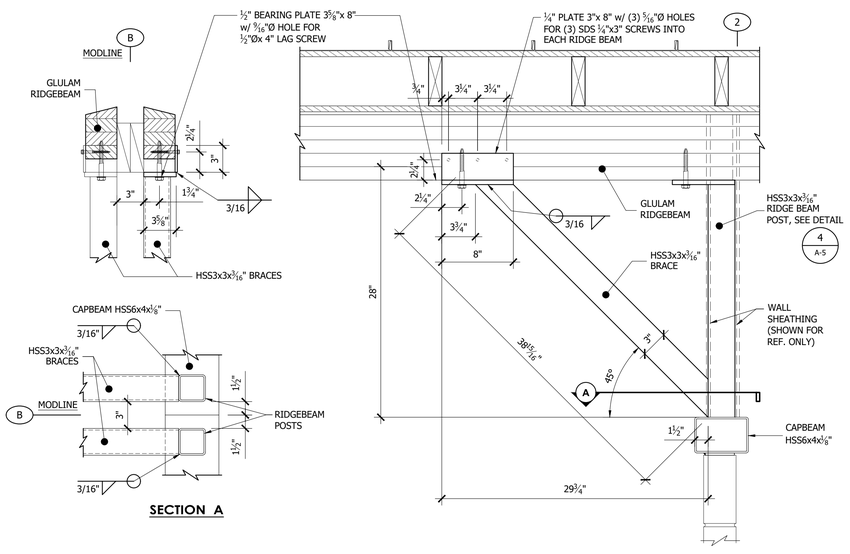

5 RIDGEBEAM ANGLE BRACING
1 1/2" = 1'-0" (SITE CONNECTION)

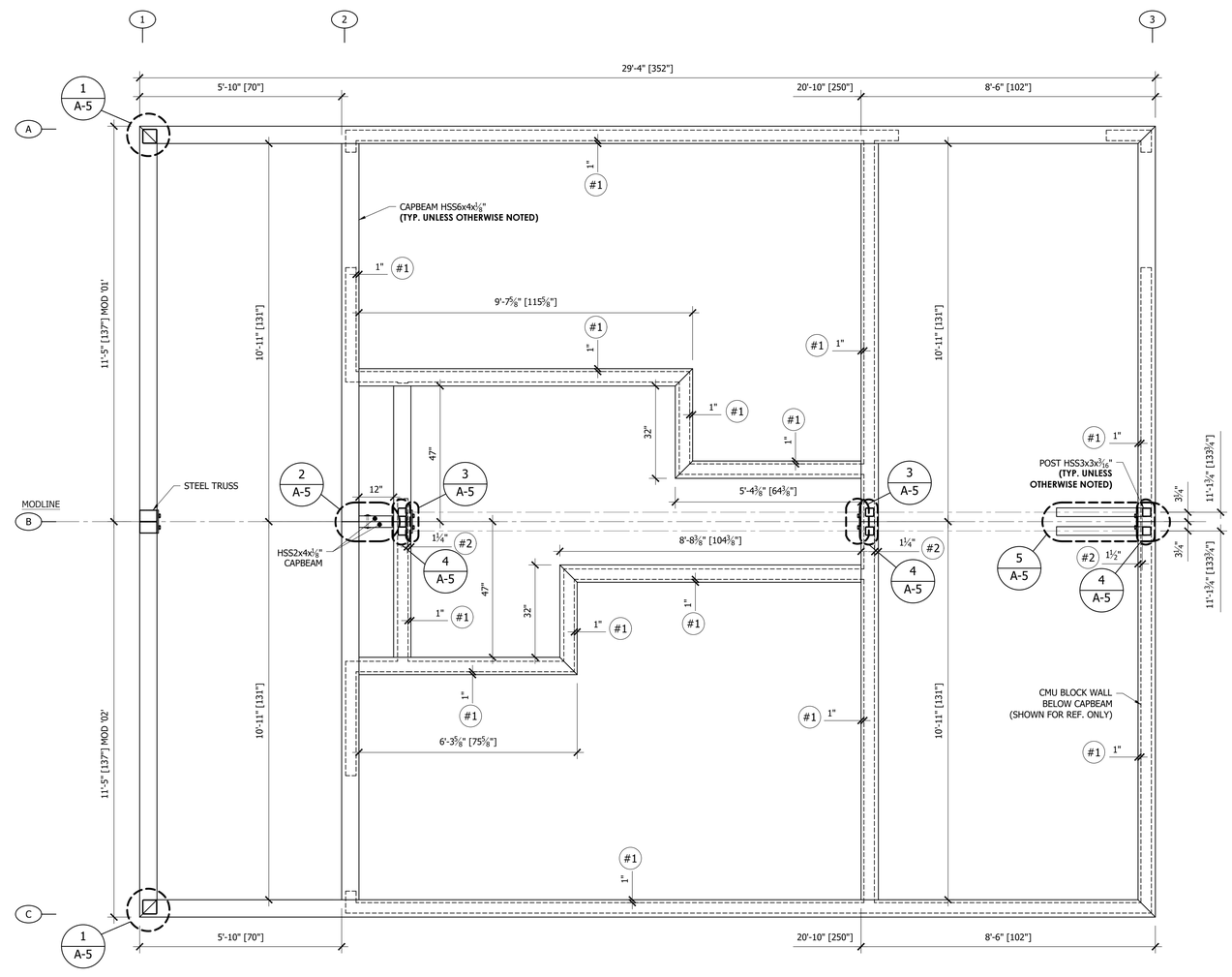

CAP BEAM PLAN
1/2" = 1'-0"

03/25/2026
REGISTERED PROFESSIONAL ENGINEER ROCK M. SHETLER 59228 CIVIL STATE OF CALIFORNIA

DATE	REV#	REVISION	BY	DATE	REV#	REVISION	BY

Blazer Modular Construction
P.O. BOX 489 945 Olney St. ■ www.blazermodular.com Aumsville, OR 97325-0489

COPYRIGHT 2026, BLAZER MODULAR CONSTRUCTION AND PUBLIC RESTROOM COMPANY. THIS MATERIAL IS THE EXCLUSIVE PROPERTY OF BLAZER MODULAR CONSTRUCTION AND PUBLIC RESTROOM COMPANY AND SHALL NOT BE REPRODUCED, USED, OR DISCLOSED TO OTHERS EXCEPT AS AUTHORIZED BY THE WRITTEN PERMISSION OF BLAZER MODULAR CONSTRUCTION OR PUBLIC RESTROOM COMPANY.

PUBLIC RESTROOM COMPANY
Building Better Places To Go.
Ph: 888-888-2060 | Fax: 888-888-1448

PROJECT NAME & LOCATION:
SIERRA CREEK PARK
NORTH HIGHLANDS, CA

SHEET TITLE:
CAP BEAM PLAN & DETAILS

Approved for Const:
File Copy:
Drawn By: RLD
Issue Date: 03/25/2026
Job No: 20702

A-5

R:\2026 Drawings\Restroom Buildings\20702 Sierra Creek Park – CA\20702 Sierra Creek Park.dwg, A-5Capbeam, 3/25/2026 1:42:54 PM

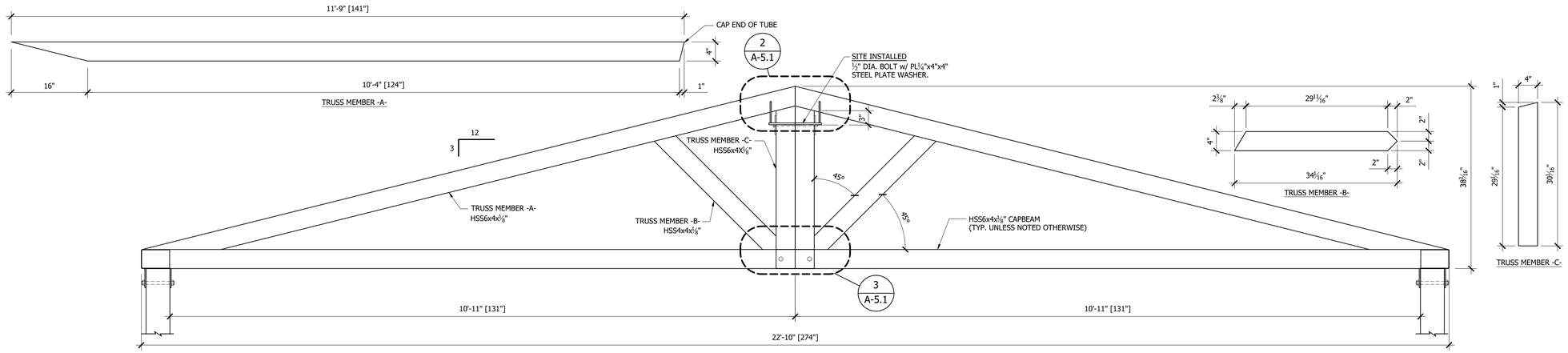

1 TRUSS DETAILS

1" = 1'-0"

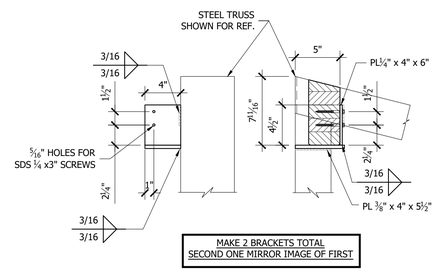

2 RIDGE BEAM BRACKET DETAIL

1 1/2" = 1'-0"

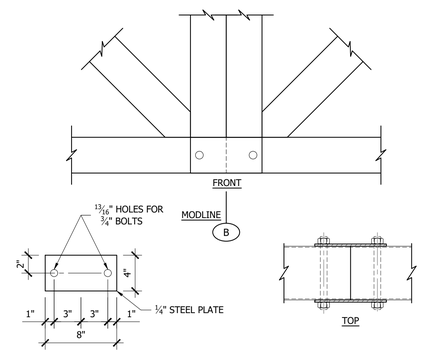

3 TRUSS CONNECTION

1 1/2" = 1'-0" SITE CONNECTION

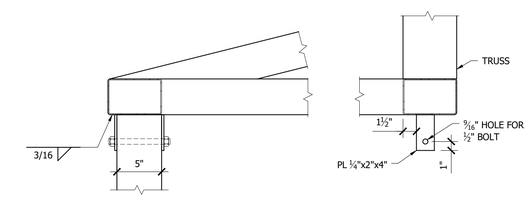

4 POST-TO-TRUSS CONNECTION

1 1/2" = 1'-0" SITE CONNECTION

APPROVED: STATE OF CA - CERTIFIED DAA

Based on the requirements of title 25 California code of regulations
Chapter 3 subchapter 2 Commercial Modular

Date: 3/30/2026 Expires: 6/30/2027

Approval # PFS: 26-003092

THIS APPROVAL DOES NOT AUTHORIZE OR APPROVE ANY OMISSION OR DEVIATION FROM THE REQUIREMENTS OF STATE LAWS OR APPLICABLE LOCAL ORDINANCES . THIS APPROVAL IS LIMITED TO FACTORY-BUILT PORTION ONLY.

PFS CORPORATION - Los Angeles, CA

03/25/2026

REGISTERED PROFESSIONAL ENGINEER
ROCK M. SHETLER
59228
CIVIL
STATE OF CALIFORNIA

DATE	REV#	REVISION	BY	DATE	REV#	REVISION	BY

Blazer Modular Construction
P.O. BOX 489
945 Olney St. ■ Aumsville, OR 97325-0489
www.blazermodular.com

COPYRIGHT 2026, BLAZER MODULAR CONSTRUCTION AND PUBLIC RESTROOM COMPANY. THIS MATERIAL IS THE EXCLUSIVE PROPERTY OF BLAZER MODULAR CONSTRUCTION AND PUBLIC RESTROOM COMPANY AND SHALL NOT BE REPRODUCED, USED, OR DISCLOSED TO OTHERS EXCEPT AS AUTHORIZED BY THE WRITTEN PERMISSION OF BLAZER MODULAR CONSTRUCTION OR PUBLIC RESTROOM COMPANY.

PUBLIC RESTROOM COMPANY
Building Better Places To Go.
Ph: 888-888-2060 | Fax: 888-888-1448

PROJECT NAME & LOCATION:
SIERRA CREEK PARK
NORTH HIGHLANDS, CA

SHEET TITLE:
CAP BEAM PLAN & DETAILS

Approved for Const:	
File Copy:	
Drawn By:	RLD
Issue Date:	03/25/2026
Job No:	20702

A-5.1

R:\2026 Drawings\Restroom Buildings\20702 Sierra Creek Park - CA\20702 Sierra Creek Park.dwg, A-5.1 Truss, 3/25/2026 1:42:56 PM

PLUMBING FIXTURE SCHEDULE		
QTY	FIXTURE	DESCRIPTION
3	WATER CLOSETS - stainless	ACORN 1675-W-1-HET-FVBO-ADA-1.28-PFS
3	TOILET SEAT - black	BEMIS 1955SSCT 047
3	FLUSH VALVE - toilet	ZURN Z6143AV-HET-BG-7L
1	URINAL - stainless	ACORN 1709 HEU-W-1-0.125-FVBO
1	FLUSH VALVE - urinal	ZURN Z6195AV-ULF-BG-7L
2	LAVATORY - stainless	ACORN 1652 LRB-1-DMS-03-M
2	FAUCET	CHICAGO 333-E2805-765PSHAB
2	MIXING VALVE	ACORN ST70-12
2	FLOOR DRAINS	ZURN ZN451IP5BP with trap primer
2	TRAP PRIMER	PROFLO PFTP2500
2	WATER HEATER (TANKLESS)	STIEBEL DHC-3-2
1	PET FOUNTAIN	MURDOCK GRT74-PF
2	DRINKING FOUNTAIN	HAWS 1109.14
1	BOTTLE FILLER	HAWS 1920 w/ 6469 DRIP TRAY
1	WATER FILTER - single	KEYSTONE CG10
1	PRESSURE GAUGE	PROFLO PFXPG100K (DOWNSTREAM)
1	PRESSURE GAUGE	FNW XLFG 0200L (UPSTREAM)
1	DOUBLE CHECK VALVE	WATTS LF 007 1-1/2" VERTICAL INSTALL BEFORE 1ST PRESSURE GAUGE
1	PRV VALVE 1 1/2"	WATTS LF25 AUB
1	BALL VALVE 1 1/2"	NIBCO NSFP600ALFJ
1	BALL VALVE 1"	NIBCO NSFP600ALFG
1	EXPANSION TANK	PROFLO PFXT5 PREP FOR 26 GAL.
2	HOSE BIBB	ACORN 8121-LF - IN MECH. ROOM
2	HAMMER ARRESTOR	SIOUX CHIEF 654-CS
1	HOSE REEL & 100' HOSE	STRONGWAY 46434 W/ HOSE
	WATER	PRESS FIT COPPER - HOT & TEMPERED INSULATED
	WASTE	PVC SCH 40
1	VENT CAP - vandal proof	SMITH 1748
	CORP STOP	BY GC

PIPE SCHEDULE

TYPE OF SERVICE		PIPE MATERIAL: TYPE "L" COPPER	TYPE "K" COPPER	SCHEDULE 40 PVC WATER	CAST IRON "NO HUB"	SCHEDULE 40 PVC DWV	SCHEDULE 40 ABS DWV
WATER	ABOVE GROUND	✓					
	BELOW GROUND		✓				
SANITARY DRAINAGE	ABOVE GROUND					✓	
	BELOW GROUND						✓
SANITARY VENT	ABOVE GROUND					✓	
	BELOW GROUND						✓
	ABOVE ROOF				✓		

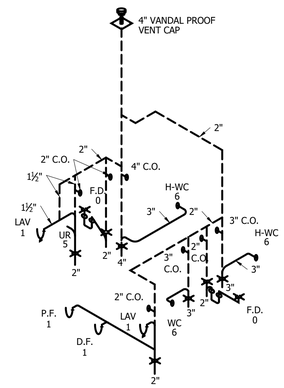

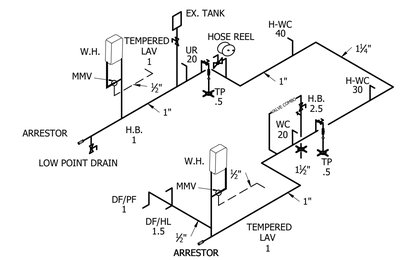

APPROVED: STATE OF CA - CERTIFIED DAA
Based on the requirements of title 25 California code of regulations
Chapter 3 subchapter 2 Commercial Modular
Date: 3/30/2026 Expires: 6/30/2027
Approval # PFS: 26-003092
THIS APPROVAL DOES NOT AUTHORIZE OR APPROVE ANY OMISSION OR DEVIATION FROM THE REQUIREMENTS OF STATE LAWS OR APPLICABLE LOCAL ORDINANCES . THIS APPROVAL IS LIMITED TO FACTORY-BUILT PORTION ONLY.
PFS CORPORATION - Los Angeles, CA

WASTE AND VENT PIPING:

- FIXTURE UNITS 27
- SIZE OF BUILDING DRAIN ..... 4"
- AGGREGATE AREA 12.566
- FLOOR DRAINS ..... 2"

GENERAL NOTES:

- SIZED TO 2025 CALIFORNIA PLUMBING CODE.
- D.W.V. MATERIAL - P.V.C.
- D.W.V. UNDERGROUND MATERIAL - P.V.C OR A.B.S.
- PLUMBING BELOW FLOOR SLAB TO BE PROVIDE AND INSTALLED ON SITE BY OTHERS.
- INSTALL GRATES AT FLOOR OPENING.
- SITE CONNECTION TO SEWER LINE AND MODULE LINE CONNECTIONS ARE CLEARLY LABELED.

GENERAL SHEET NOTE:
LOCATION OF ALL PLUMBING COMPONENTS IN THE MECHANICAL ROOM ARE SUBJECT TO CHANGE, FINAL LOCATIONS TBD.

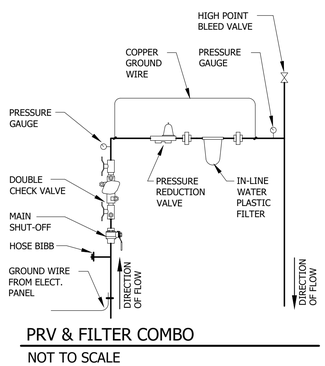

PRV & FILTER COMBO

NOT TO SCALE

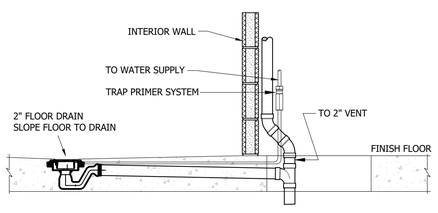

FLOOR DRAIN DETAIL

SCALE: 3/4" = 1'-0"

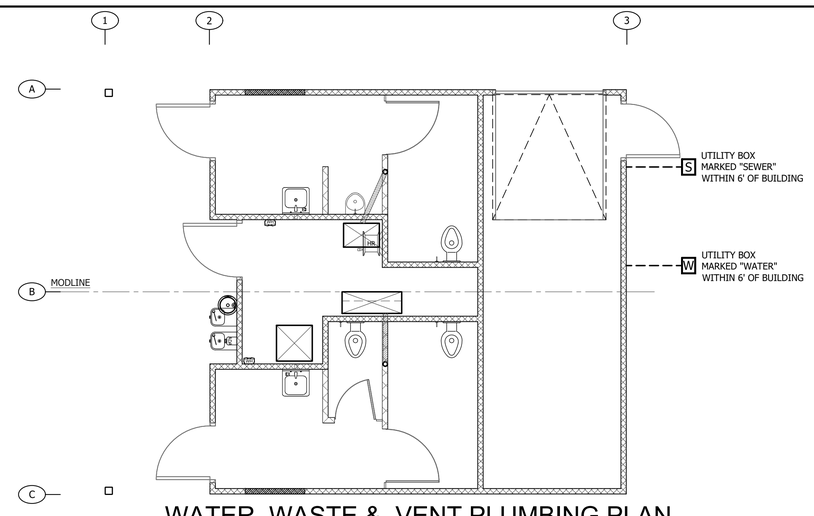

WATER, WASTE & VENT PLUMBING PLAN

1/4" = 1'-0"

DESIGN CRITERIA

- FIXTURE UNITS
- DEVELOPED LENGTH ..... 100'
- ELEVATION ..... 0'
- SYSTEM PRESSURE ..... 46-60 PSI

NOTE: THIS WATER SYSTEM IS DESIGNED w/ A MAX. DEVELOPED LENGTH OF 100 FT. FROM THE METER TO THE MOST REMOTE FIXTURE WITHIN THE BUILDING.

WATER PIPING:

- FIXTURE UNITS 119
- DEVELOPED LENGTH ..... TBD
- ELEVATION DIFFERENCE ..... TBD
- SYSTEM PRESSURE ..... TBD
- METER SIZE ..... TBD
- BUILDING SUPPLY SIZE ..... 1 1/2"

POTABLE WATER
TEMPERED WATER
HOT WATER
RELIEF WATER

CONTROL VALVES PROVIDED AT EACH WATER SUPPLIED FIXTURE AND APPLIANCE

609.10 Disinfection of Potable Water System

NEW OR REPAIRED POTABLE WATER SYSTEMS SHALL BE DISINFECTED PRIOR TO USE WHERE REQUIRED BY THE AUTHORITY HAVING JURISDICTION. THE METHOD TO BE FOLLOWED SHALL BE THAT PRESCRIBED BY THE HEALTH AUTHORITY OR, IN CASE NO METHOD IS PRESCRIBED BY IT, THE FOLLOWING:

1. THE PIPING SYSTEM SHALL BE FLUSHED WITH CLEAN, POTABLE WATER UNTIL POTABLE WATER APPEARS AT THE POINTS OF THE OUTLET.
2. THE SYSTEM OR PARTS THEREOF SHALL BE FILLED WITH A WATER CHLORINE SOLUTION CONTAINING NOT LESS THAN 50 PARTS PER MILLION OF CHLORINE, AND THE SYSTEM OR PART THEREOF SHALL BE VALVED-OFF AND ALLOWED TO STAND FOR 24 HOURS; OR, THE SYSTEM OR PART THEREOF SHALL BE FILLED WITH A WATER-CHLORINE SOLUTION CONTAINING NOT LESS THAN 200 PARTS PER MILLION OF CHLORINE AND ALLOWED TO STAND FOR 3 HOURS.
3. FOLLOWING THE ALLOWED STANDING TIME, THE SYSTEM SHALL BE FLUSHED WITH CLEAN, POTABLE WATER UNTIL THE CHLORINE RESIDUAL IN THE WATER COMING FROM THE SYSTEM DOES NOT EXCEED THE CHLORINE RESIDUAL IN THE FLUSHING WATER.
4. THE PROCEDURE SHALL BE REPEATED WHERE IT IS SHOWN BY A BACTERIOLOGICAL EXAMINATION MAKE BY AN APPROVED AGENCY THAT CONTAMINATION PERSISTS IN THE SYSTEM.

GENERAL NOTES:

- SIZED TO 2025 CALIFORNIA PLUMBING CODE (CPC).
- POTABLE WATER MATERIAL - COPPER AND AQUAPEX.
- CONTINUATION OF WATER MAIN SHALL BE PROVIDED AND INSTALLED ON SITE BY OTHERS.
- WHEN REQUIRED, HEAT TAPE SHALL BE PROVIDED AND INSTALLED ON SITE BY OTHERS.
- WATER SUPPLY AND DRAINPIPES UNDER LAVATORIES AND SINKS SHALL BE INSULATED OR OTHERWISE CONFIGURED TO PROTECT AGAINST CONTACT. THERE SHALL BE NO SHARP OR ABRASIVE SURFACES UNDER LAVATORIES AND SINKS. [CBC 11B-606.5]
- HOT WATER DELIVERED FROM PUBLIC LAVATORIES SHALL BE LIMITED TO A MAXIMUM TEMPERATURE OF 120°F BY A TEMPERING DEVICE MEETING ASSE 1070. [CPC 407.3]
- PUBLIC USE WATER CLOSET BOWLS SHALL BE ELONGATED. [CPC 411.1]
- PUBLIC USE WATER CLOSET SEATS SHALL COMPLY WITH CPC 411.3. PLASTIC SEATS SHALL COMPLY WITH IAPMO Z124.5.
- HAMMER ARRESTORS SHALL BE INSTALLED IN BUILDINGS EQUIPPED WITH QUICK ACTING VALVES. [CPC 609.10]
- A TEE WITH A PLUG SHALL BE PROVIDED FOR ON SITE INSTALLATION OF A THERMAL EXPANSION DEVICE IF REQUIRED. [CPC 608.3]
- A THERMAL EXPANSION DEVICE HAS BEEN INSTALLED IN ACCORDANCE WITH CPC 608.3.
- PEX TUBING SHALL NOT BE INSTALLED WITHIN THE FIRST 18" OF PIPE CONNECTED TO THE WATER HEATER. [CPC 604.13]
- WATER HEATER EFFICIENCY IS IN ACCORDANCE WITH TITLE 20 CALIFORNIA CODE OF REGULATIONS, DIVISION 2, ARTICLE 4, SECTION 1605. [CENC 110.3]
- SERVICE WATER HEATING INSULATION THICKNESS SHALL BE IN ACCORDANCE WITH CENC TABLE 120.3-A-1:
  - o FLUID OPERATING TEMP RANGE 105-140°F <1" PIPE = 1" INSULATION
  - o FLUID OPERATING TEMP RANGE 141-200°F <1" PIPE = 1-1/2" INSULATION
  - o FLUID OPERATING TEMP RANGE 105-140°F 1" TO <1-1/2" PIPE = 1-1/2" INSULATION
  - o FLUID OPERATING TEMP RANGE 141-200°F 1" TO <1-1/2" PIPE = 1-1/2" INSULATION

DATE	REV#	REVISION	BY	DATE	REV#	REVISION	BY

Blazer Modular Construction
P.O. BOX 489
945 Olney St. ■ Aumsville, OR 97325-0489
www.blazermodular.com

COPYRIGHT 2026, BLAZER MODULAR CONSTRUCTION AND PUBLIC RESTROOM COMPANY. THIS MATERIAL IS THE EXCLUSIVE PROPERTY OF BLAZER MODULAR CONSTRUCTION AND PUBLIC RESTROOM COMPANY AND SHALL NOT BE REPRODUCED, USED, OR DISCLOSED TO OTHERS EXCEPT AS AUTHORIZED BY THE WRITTEN PERMISSION OF BLAZER MODULAR CONSTRUCTION OR PUBLIC RESTROOM COMPANY.

PUBLIC RESTROOM COMPANY
Building Better Places To Go.
Ph: 888-888-2060 | Fax: 888-888-1448

PROJECT NAME & LOCATION:
SIERRA CREEK PARK
NORTH HIGHLANDS, CA

SHEET TITLE:
PLUMBING PLAN & INFORMATION

Approved for Const:
File Copy:
Drawn By: RLD
Issue Date: 03/25/2026
Job No: 20702

P-1

R:\2026 Drawings\Restroom Buildings\20702 Sierra Creek Park - CA\20702 Sierra Creek Park.dwg, P-1, 3/25/2026 1:42:57 PM

ELECTRICAL FIXTURE/EQUIPMENT SCHEDULE & SYMBOLS

SYMBOL	QTY	RATING	CALC. LOAD	DESCRIPTION	MODEL	HEIGHT TO TOP	COMMENTS
PANEL	1	100 AMP MAIN BREAKER		120/240 SINGLE PHASE WITH PLUG-ON BREAKERS	SQUARE D - QO124M100P / QOC24US	72"	FURR-OUT 6"
DC GFCI RECEPTACLE (DC GFCI)	7	1500 W	1500 VA	DEDICATED 20 AMP GFCI RECEPTACLE	LEVITON GFNT2-W	48" U.N.O.	
SWITCH	1			SINGLE POLE SWITCH	LEVITON 1221-W	48"	
SWITCH - EXT. BYPASS ($BP)	1			SINGLE POLE SWITCH	LEVITON 1221-2R	48"	
DOUBLE POLE SWITCH ($2)	1			DOUBLE POLE SWITCH	LEVITON 1222-2W	48"	NOTE: FOR RESTROOM BYPASS
OCCUPANCY SENSOR SWITCH ($OS)	1			OCCUPANCY SENSOR	LEVITON DECORA ODS10-IDW	48"	
ASTRONOMICAL TIMECLOCK (TC)	1			ASTRONOMICAL TIMECLOCK	INTERMATIC ET8215C		
LIGHT - EXTERIOR (10)	5	10 W	50 VA	10 WATT LED	LUMINAIRE BLD12 NODIM-10W-120-4000K-DP-BRZ	ON CAPBEAM	CONTROLLED BY TIMECLOCK / BYPASS SWITCH
LIGHT - RESTROOM (15)	4	15 W	60 VA	15 WATT LED	LUMINAIRE SWP1212-15W-4000K-OP-BRZ-OCC	108"	CONTROLLED BY INTEGRAL MOTION SENSOR / BYPASS SWITCH
LIGHT - MECH. ROOM (15)	2	15 W	30 VA	4 FT. - 1 LAMP - LED	GREENLIGHTING AL-41L	CEILING MOUNTED	CONTROLLED BY SINGLE POLE SWITCH
LIGHT - STORAGE (15)	4	15 W	60 VA	4 FT. - 1 LAMP - LED	GREENLIGHTING AL-41L	CEILING MOUNTED	CONTROLLED BY OCCUPANCY SENSOR SWITCH SENSOR
EMERGENCY LIGHT (EL)	1			EMERGENCY LIGHT	LITHONIA ELM2L	ABOVE DOOR	
HAND DRYER	2	840 W	1680 VA	REMOTE POWER ELECTRIC	FASTAIRE HD03	39" TO CONTROLS	
WIRE FOR WATER HEATER (WH)	2	3.3 KW @ 240V	6.6 KVA @ 240V	STIEBEL TANKLESS WATER HEATER	STIEBEL DHC-3-2		

NOTES:

1. ALL CONDUCTORS ARE COPPER; TYPE THHN / THWN.
2. RATING OF STANDARD PANEL IS 22,000 A.I.C.
3. WIRING METHOD IN METALLIC CONDUIT. (MC CABLE, EMT, METALLIC FLEX).
4. INSTALL UFER GROUND IN SLAB, TERMINATING IN MECH.
5. GREEN GROUNDING CONDUCTOR IN ALL RACEWAYS.
6. SITE CONNECTION POINT FOR ELECT SERVICE AND MODULE LINE CROSS OVERS ARE CLEARLY LABELED.

ONE-LINE-DIAGRAM

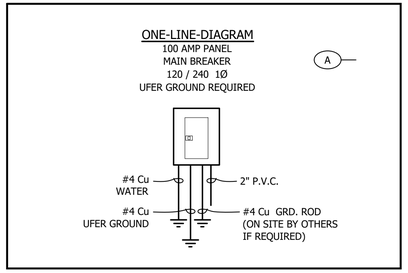

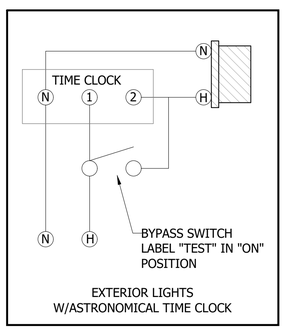

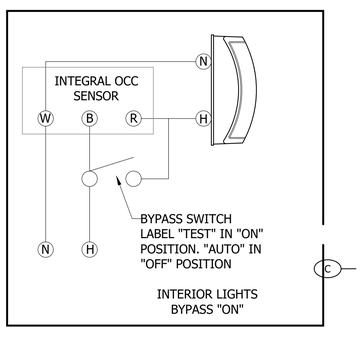

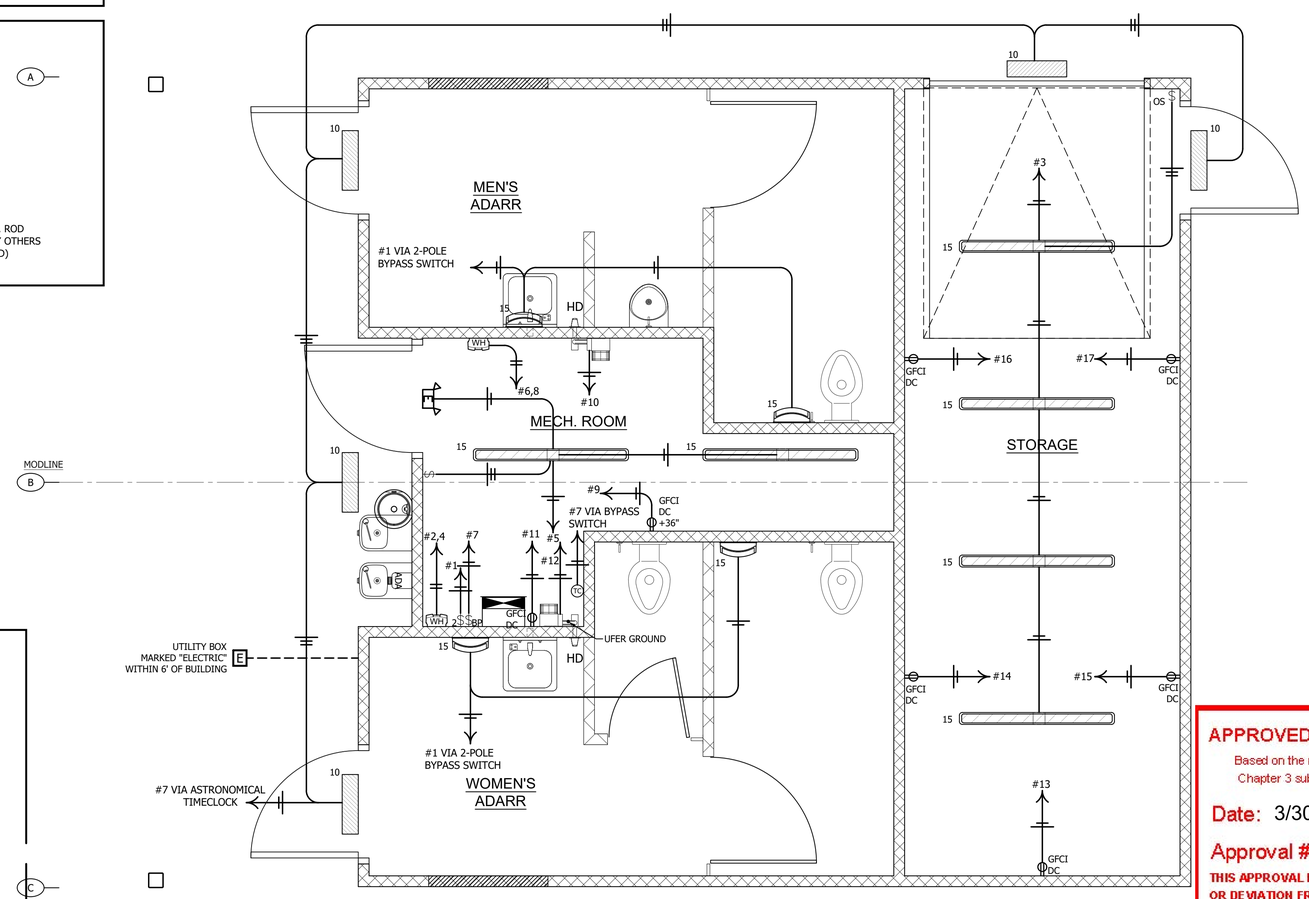

ELECTRICAL PLAN

1/2" = 1'-0"

SRP 3/17/2026

PANEL SCHEDULE

PANEL DESIGNATION	A	VOLTS	120/240	AIC RATING:	22,000
MOUNTING	SURFACE	PHASE	1	BUSS RATING:	100 AMP
ENCLOSURE TYPE	NEMA 1			MCB RATING:	100 AMP
*PROVIDE BREAKER LOCKOUT					

CKT	CIRCUIT DESCRIPTION	TRIP	WIRE SIZE	CONNECTED LOAD (VA) A		CONNECTED LOAD (VA) B		WIRE SIZE	TRIP	DESCRIPTION	CKT
1	***RESTROOM LIGHTS***	**20**	**12**	**60**	**1650**			**12**	**20**	***WATER HEATER****	2
3	***STORAGE LIGHTS***	**20**	**12**			**45**	**1650**	**/**	**/**	**/**	4
5	***MECH. ROOM LIGHTS***	**20**	**12**	**30**	**1650**			**12**	**20**	***WATER HEATER****	6
7	***EXTERIOR LIGHTS***	**20**	**12**			**50**	**1650**	**/**	**/**	**/**	8
9	***MECH ROOM GFCI***	**20**	**12**	**1500**	**840**			**12**	**20**	***HAND DRYER****	10
11	***MECH ROOM GFCI***	**20**	**12**			**1500**	**840**	**12**	**20**	***HAND DRYER****	12
13	***STORAGE GFCI***	**20**	**12**	**1500**	**1500**			**12**	**20**	***STORAGE GFCI***	14
15	***STORAGE GFCI***	**20**	**12**			**1500**	**1500**	**12**	**20**	***STORAGE GFCI***	16
17	***STORAGE GFCI***	**20**	**12**	**1500**						***SPACE***	18
19	***SPACE***									***SPACE***	20
21	***SPACE***									***SPACE***	22
23	***SPACE***									***SPACE***	24
CONNECTED LOAD		**TOTAL LOAD:**		**10230.0**		**8735.0**					
		TOTAL AMPS:		**85.3**		**72.8**					

ELECTRICAL PLAN REVIEW LOAD CALCULATION — CALC BY: SHANE PEDROLI

PROJECT INFO: 20702 SIERRA CREEK PARK — DATE: 3/12/2026

PANEL: A — VOLTAGE: **120/240** PHASE: **1** — AMPACITY: **100**

FED FROM: EXISTING SERVICE — AIC RATING: **22,000**

DESCRIPTION	VA LOAD	DEMAND FACTOR	PHASE A	PHASE B		NEUTRAL A	NEUTRAL B		NOTES
LIGHTING									
INTERIOR LIGHTING	135	1.25	**113**	**56**		***113***	***56***		
EXTERIOR LIGHTING	50	1.25		**63**			***63***		
RECEPTACLES									
TOTAL	0	1.00							
HVAC (MOTORS)									
TOTAL	0	1.00							
LARGEST	0	0.25							
WATER HEATERS (2)	6600	1.00	**3300**	**3300**					
HAND DRYERS (2)	1680	1.00	**840**	**840**		***840***	***840***		
DC GFCI'S (7)	10500	1.00	**6000**	**4500**		***6000***	***4500***		
TOTALS			PHASE A	PHASE B		NEUTRAL A	NEUTRAL B		
		VA	**10253.0**	**8759.0**		***6953.0***	***5459.0***		
		AMPS	**85.4**	**73.0**		***57.9***	***45.5***		

TOTAL KVA 19.012 KVA

LARGEST POWER PHASE 10253.0 VA / 85.4 AMPS

LARGEST NEUTRAL PHASE *6953.0* VA / *57.9* AMPS

NOTES:

CALIFORNIA - SPACE BY SPACE LIGHTING POWER DENSITY PER 2022 TITLE 24				
SPACE DESIGNATION	**SQ. FT.**	**SPACE TYPE**	**WATTS SQ. FT. ALLOWANCE**	**TOTAL ALLOWED**
MEN'S ADARR	112	RESTROOM	0.65	73
WOMEN'S ADARR	121	RESTROOM	0.65	79
MECH. ROOM	69	ELECT / MECH	0.4	28
STORAGE ROOM	170	STORAGE ROOM	0.4	68
TOTAL SQ. FT.	472		TOTAL ALLOWED	247 W
			TOTAL INSTALLED	135 W

TOTAL = SQ. FT. x ALLOWED WATTS PER SQ. FT. - TABLE 140.6-C

LIGHTING CONTROLS SCHEDULE

AREA	CONTROLS
[illegible] OR	ASTRONOMICAL TIMECLOCK / BYPASS SWITCH
AND WOMEN'S	INTEGRAL MOTION SENSOR / BYPASS SWITCH
/ ELEC. ROOM	MANUAL SWITCH CONTROL FOR LIGHTING
GE ROOM	OCCUPANCY SENSOR SWITCH CONTROL FOR LIGHTING

APPROVED: STATE OF CA - CERTIFIED DAA

Based on the requirements of title 25 California code of regulations
Chapter 3 subchapter 2 Commercial Modular

Date: 3/30/2026 Expires: 6/30/2027

Approval # PFS: 26-003092

THIS APPROVAL DOES NOT AUTHORIZE OR APPROVE ANY OMISSION OR DEVIATION FROM THE REQUIREMENTS OF STATE LAWS OR APPLICABLE LOCAL ORDINANCES . THIS APPROVAL IS LIMITED TO FACTORY-BUILT PORTION ONLY.

PFS CORPORATION - Los Angeles, CA

DATE	REV#	REVISION	BY	DATE	REV#	REVISION	BY

Blazer Modular Construction.
P.O. BOX 489 945 Olney St. ■ www.blazermodular.com Aumsville, OR 97325-0489

COPYRIGHT 2026, BLAZER MODULAR CONSTRUCTION AND PUBLIC RESTROOM COMPANY. THIS MATERIAL IS THE EXCLUSIVE PROPERTY OF BLAZER MODULAR CONSTRUCTION AND PUBLIC RESTROOM COMPANY AND SHALL NOT BE REPRODUCED, USED, OR DISCLOSED TO OTHERS EXCEPT AS AUTHORIZED BY THE WRITTEN PERMISSION OF BLAZER MODULAR CONSTRUCTION OR PUBLIC RESTROOM COMPANY.

PUBLIC RESTROOM COMPANY
Building Better Places To Go.
Ph: 888-888-2060 | Fax: 888-888-1448

PROJECT NAME & LOCATION:
SIERRA CREEK PARK
NORTH HIGHLANDS, CA

SHEET TITLE:
ELECTRICAL PLAN & INFORMATION

Approved for Const:
File Copy:
Drawn By: RLD
Issue Date: 03/25/2026

Job No: 20702

E-1

R:\2026 Drawings\Restroom Buildings\20702 Sierra Creek Park - CA\20702 Sierra Creek Park.dwg, E-1, 3/25/2026 1:42:59 PM

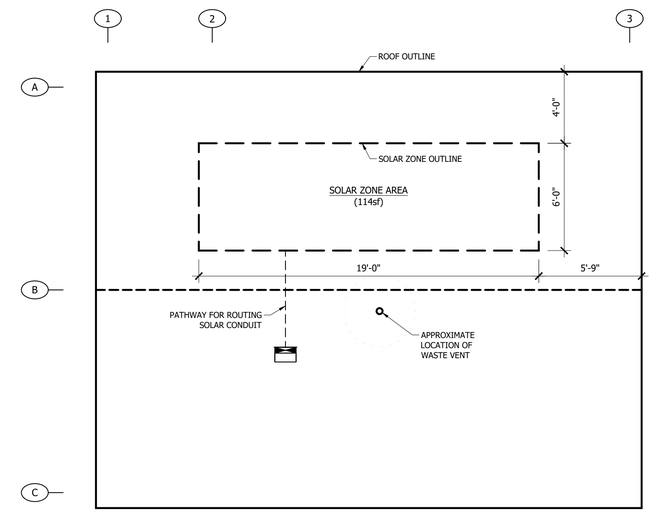

SOLAR READY ZONE PLAN

1/4" = 1'-0"

GROSS ROOF AREA = 745 sq.ft.

SOLAR ZONE AREA = 15% OF ROOF AREA = 112 sq.ft.

APPROVED: STATE OF CA - CERTIFIED DAA

Based on the requirements of title 25 California code of regulations
Chapter 3 subchapter 2 Commercial Modular

Date: 3/30/2026 Expires: 6/30/2027

Approval # PFS: 26-003092

THIS APPROVAL DOES NOT AUTHORIZE OR APPROVE ANY OMISSION OR DEVIATION FROM THE REQUIREMENTS OF STATE LAWS OR APPLICABLE LOCAL ORDINANCES . THIS APPROVAL IS LIMITED TO FACTORY-BUILT PORTION ONLY.

PFS CORPORATION - Los Angeles, CA

DATE	REV#	REVISION	BY	DATE	REV#	REVISION	BY

Blazer Modular Construction
P.O. BOX 489
945 Olney St. ■ Aumsville, OR 97325-0489
www.blazermodular.com

COPYRIGHT 2026, BLAZER MODULAR CONSTRUCTION AND PUBLIC RESTROOM COMPANY. THIS MATERIAL IS THE EXCLUSIVE PROPERTY OF BLAZER MODULAR CONSTRUCTION AND PUBLIC RESTROOM COMPANY AND SHALL NOT BE REPRODUCED, USED, OR DISCLOSED TO OTHERS EXCEPT AS AUTHORIZED BY THE WRITTEN PERMISSION OF BLAZER MODULAR CONSTRUCTION OR PUBLIC RESTROOM COMPANY.

PUBLIC RESTROOM COMPANY
Building Better Places To Go.
Ph: 888-888-2060 | Fax: 888-888-1448

PROJECT NAME & LOCATION:
SIERRA CREEK PARK
NORTH HIGHLANDS, CA

SHEET TITLE:
SOLAR ZONE PLAN

Approved for Const:
File Copy:
Drawn By: RLD
Issue Date: 03/25/2026

Job No: 20702

E-2

R:\2026 Drawings\Restroom Buildings\20702 Sierra Creek Park - CA\20702 Sierra Creek Park.dwg, E-2, 3/25/2026 1:43:02 PM

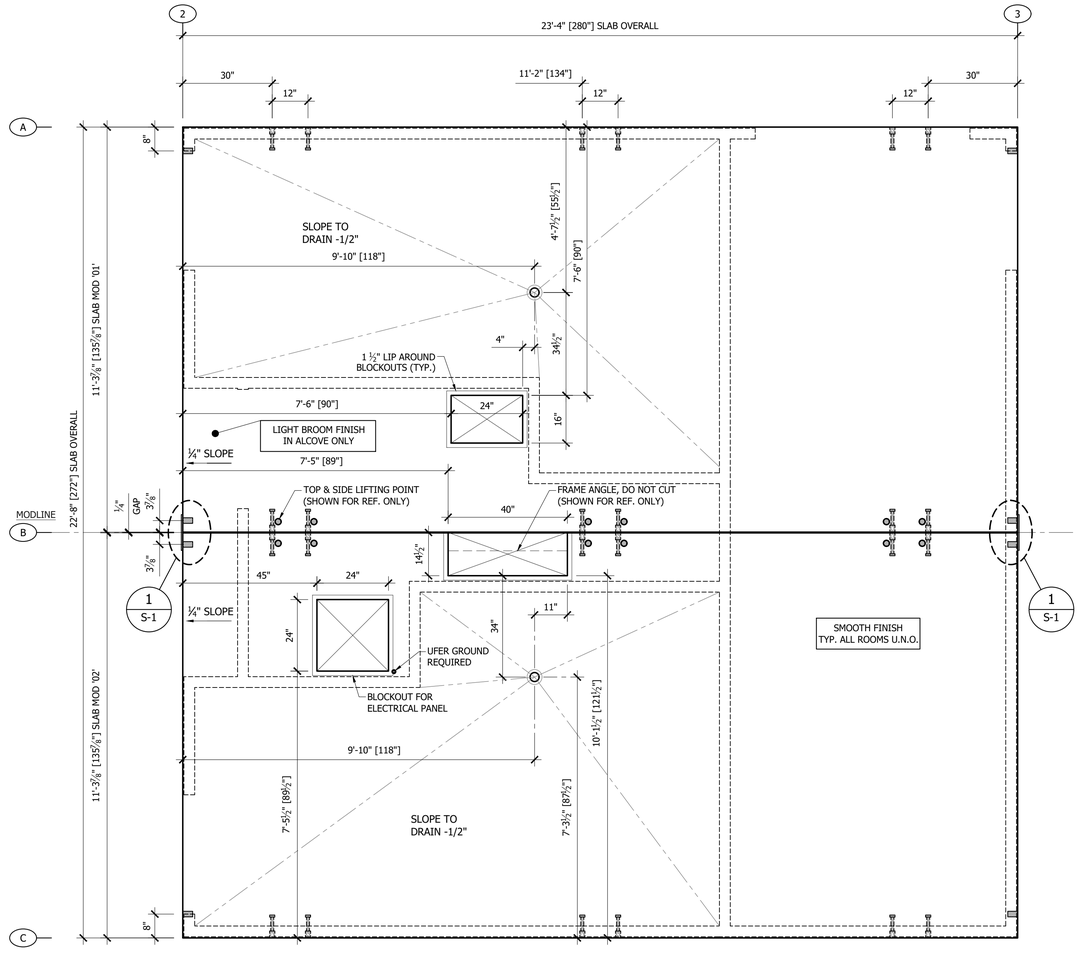

SLAB PLAN

1/2" = 1'-0"

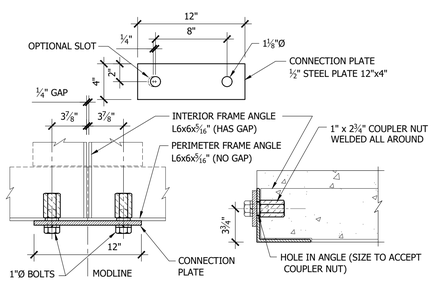

PLAN VIEW SECTION

1 SIDE MOD. SITE CONNECTION DETAIL

1 1/2" = 1'-0"

APPROVED: STATE OF CA - CERTIFIED DAA

Based on the requirements of title 25 California code of regulations
Chapter 3 subchapter 2 Commercial Modular

Date: 3/30/2026 Expires: 6/30/2027

Approval # PFS: 26-003092

THIS APPROVAL DOES NOT AUTHORIZE OR APPROVE ANY OMISSION OR DEVIATION FROM THE REQUIREMENTS OF STATE LAWS OR APPLICABLE LOCAL ORDINANCES . THIS APPROVAL IS LIMITED TO FACTORY-BUILT PORTION ONLY.

PFS CORPORATION - Los Angeles, CA

NOTE:
FLOOR SLOPE SHALL NOT EXCEED 1:48 IN ACCORDANCE WITH CBC 11B-403.3.

03/25/2026

REGISTERED PROFESSIONAL ENGINEER
RUCK M. SHETLER
59228
CIVIL
STATE OF CALIFORNIA

DATE	REV#	REVISION	BY	DATE	REV#	REVISION	BY

Blazer Modular Construction
P.O. BOX 489 www.blazermodular.com
945 Olney St. ■ Aumsville, OR 97325-0489

COPYRIGHT 2026, BLAZER MODULAR CONSTRUCTION AND PUBLIC RESTROOM COMPANY. THIS MATERIAL IS THE EXCLUSIVE PROPERTY OF BLAZER MODULAR CONSTRUCTION AND PUBLIC RESTROOM COMPANY AND SHALL NOT BE REPRODUCED, USED, OR DISCLOSED TO OTHERS EXCEPT AS AUTHORIZED BY THE WRITTEN PERMISSION OF BLAZER MODULAR CONSTRUCTION OR PUBLIC RESTROOM COMPANY.

PUBLIC RESTROOM COMPANY
Building Better Places To Go.
Ph: 888-888-2060 | Fax: 888-888-1448

PROJECT NAME & LOCATION:
SIERRA CREEK PARK
NORTH HIGHLANDS, CA

SHEET TITLE:
SLAB PLAN

Approved for Const:	
File Copy:	
Drawn By:	RLD
Issue Date:	03/25/2026
Job No:	20702

S-1

R:\2026 Drawings\Restroom Buildings\20702 Sierra Creek Park - CA\20702 Sierra Creek Park.dwg, S-1, 3/25/2026 1:43:04 PM

IMPROVEMENT PLANS FOR
WATT AVENUE
APN 203-0310-045-0000
SIERRA CREEK COMMUNITY PARK

SACRAMENTO COUNTY, CALIFORNIA

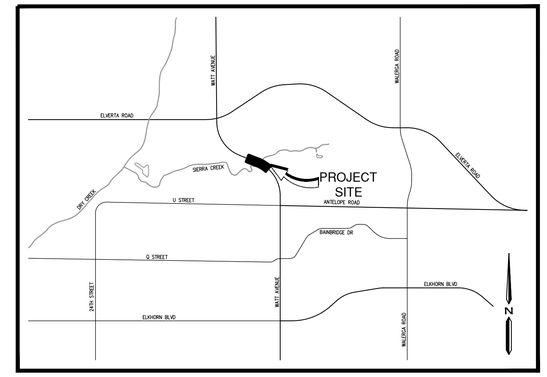

LOCATION MAP
NOT TO SCALE

LEGEND (PLANS)

EXISTING	PROPOSED	DESCRIPTION
	TC 16.25	TOP OF CURB ELEVATION
	MTC 16.25	MEDIAN TOP OF CURB ELEVATION
		GRADING LIMIT
		CURB, GUTTER AND SIDEWALK
		CENTERLINE
SS	SS	SANITARY SEWER PIPE
		SANITARY SEWER MANHOLE
SD	SD	STORM DRAIN PIPE
		STORM DRAIN MANHOLE
W	W	WATER PIPE
		CATCH BASIN
		FIRE HYDRANT
		ELECTROLIER (FOR REFERENCE ONLY)

ABBREVIATION LIST

AB	AGGREGATE BASE	MH	MANHOLE
AC	ASPHALT	MIN	MINIMUM
AER	AERATION	MTC	MEDIAN TOP OF CURB
ARV	AIR RELEASE VALVE	(N)	NORTH
BC	BEGIN CURVE	NIC	NOT INCLUDED
BLVD	BOULEVARD	NPW	NON-POTABLE WATER
BOV	BLOWOFF VALVE	NTS	NOT TO SCALE
BV	BUTTERFLY VALVE	PCC	POINT OF COMPOUND CURVE
BVC	BEGIN VERTICAL CURVE	PKWY	PARKWAY
C&G	CURB AND GUTTER	PL	PROPERTY LINE
CB	CATCH BASIN	PRC	POINT OF REVERSE CURVE
CL	CENTER LINE	PUE	PUBLIC UTILITY EASEMENT
CO	CLEAN OUT	PVI	POINT OF INTERSECTION VERTICAL CURVE
DWY	DRIVEWAY	RCP	REINFORCED CONCRETE PIPE
(E)	EAST	RET	RETURN
EA	EACH	RFL	RIVER FILL LINE
EC	END CURVE	R/W	RIGHT OF WAY
EL	ELEVATION	RT	RIGHT
EVC	END VERTICAL CURVE	RW	RECYCLED WATER
EX	EXISTING	(S)	SOUTH
FG	FINISHED GRADE	S	SLOPE
FH	FIRE HYDRANT	S/W	SIDEWALK
FH (#)	FIRE HYDRANT NUMBER	SD	STORM DRAIN
FI	FIELD INLET	SS	SANITARY SEWER
GB	GRADE BREAK	SSFM	SANITARY SEWER FORCE MAIN
GR	GRATE	SSJID	SOUTH SAN JOAQUIN IRRIGATION DISTRICT
GV	RESILIENT GATE VALVE	STA	STATION
HP	HIGH POINT	STD	STANDARD
INV	INVERT	(T)	TOTAL
LC	LAKE CIRCULATION	TC	TOP OF VERTICAL CURB
LF	LINEAR FEET	TRC	TOP OF ROLLED CURB
LFL	LAKE FILL LINE	TYP	TYPICAL
LP	LOW POINT	VC	VERTICAL CURB
LS	LANDSCAPE	(W)	WEST
LT	LEFT	W	WATER
MAX	MAXIMUM		

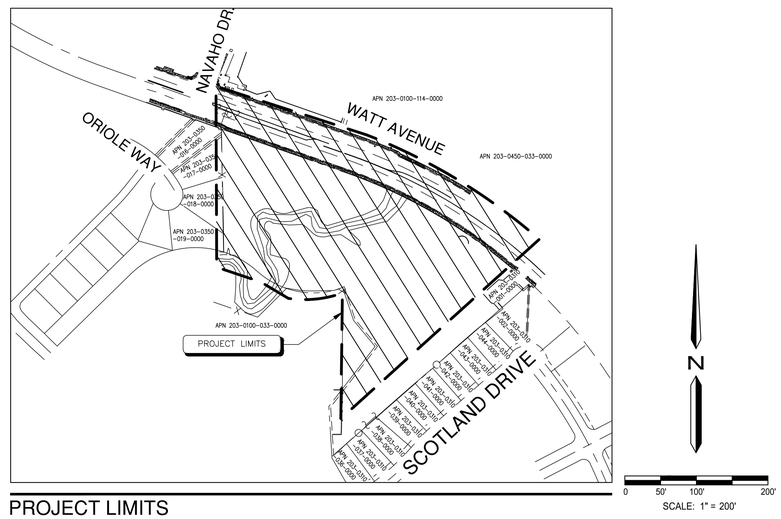

PROJECT LIMITS

SHEET INDEX

SHEET NUMBER	SHEET TITLE
1	COVER SHEET
2	NOTES
3	NOTES
4	IMPROVEMENT PLAN
5	DETAILS
6	EROSION CONTROL NOTES
7	EROSION CONTROL PLAN
TS-1	TRAFFIC SIGNAL MODIFICATION PLAN
TS-2	TRAFFIC SIGNAL MODIFICATION PLAN
SS-1	SIGNING & STRIPING PLAN
L1.0	IRRIGATION PLAN
L2.0	PLANTING PLAN
L3.0	IRRIGATION AND PLANTING DETAILS

UTILITY REPRESENTATIVES			
GAS	PG&E	6301 S ST. SACRAMENTO, CA 95817	530-889-5089
ELECTRICITY	S.M.U.D.	1290 FULTON AVE SACRAMENTO, CA 95825	916-973-1570
TELEPHONE	AT&T	2700 WATT AVE SACRAMENTO, CA 95825	916-484-2388
WATER	SACRAMENTO SUBURBAN WATER DISTRICT	3701 MARCONI AVE, SUITE 100, SACRAMENTO, CA 95821	1-210-821-4105
SAC METRO FIRE	SACRAMENTO COUNTY	10545 ARMSTRONG AVE., SUITE 200, MATHER, CA 95655	916-859-4300
SEWER	SACRAMENTO AREA SEWER DISTRICT	10060 GOETHE RD, SACRAMENTO, CA 95827	916-876-6100
DRAINAGE	SACRAMENTO COUNTY DRAINAGE DIVISION	827 7TH STREET SUITE 301 SACRAMENTO, CA 95814	916-875-4311
T.V. CABLE	COMCAST	1242 NATIONAL DR, SACRAMENTO, CA 95834	1-800-266-2278
LIGHT RAIL	SACRAMENTO REGIONAL TRANSIT DISTRICT	1400 29TH ST SACRAMENTO, CA 95812	916-321-2877
TELEPHONE	INTEGRA TELECOM	2495 NATOMAS PARK DRIVE, STE 300 SACRAMENTO, CA 95833	916-281-2400
TELEPHONE	FRONTIER COMMUNICATIONS	9260 E. STOCKTON BLVD ELK GROVE, CA 95624	1916-691-5612

WDID: 5S34C410556
CONSTRUCTION START DATE: TBD
FINAL STABILIZATION DATE: TBD
AREA OF DISTURBANCE (AC.): 6.79 AC
VOL. OF CUT (CY): 4,680 VOL. OF FILL (CY): 3,880
POST-CONST. STORMWATER BMP'S REQ? (Y/N): YES

NOTE TO INSPECTOR:

- PRIOR TO FINAL ACCEPTANCE, THE PUBLIC ROADWAY AND PUBLIC UTILITY EASEMENT ON WATT AVENUE SHALL BE SUBMITTED, APPROVED AND RECORDED TO THE SATISFACTION OF THE DEPARTMENT OF TRANSPORTATION.
- PRIOR TO BEGINNING THE IMPORT OR EXPORT OF MATERIAL THE OWNER/CONTRACTOR SHALL PROVIDE THE PROPOSED HAUL ROUTE, SIZE OF TRUCKS BEING USED FOR TRASPORT, DURATION OF HAUL OPERATION AND DATES/TIMES OF THE PROPOSED HAUL. THE OWNER/CONTRACTOR SHALL NOT COMMENCE THE IMPORT OR EXPORT OF MATERIAL UNTIL THE INFORMATION PROVIDED HAS BEEN REVIEWED AND APPROVED BYT THE COUNTY

CALIFORNIA AMERICAN WATER DISTRICT

APPROVED FOR CONSTRUCTION OF WATER SYSTEM:

BY: DATE:

NOTE: THIS PLAN EXPIRES ONE YEAR FROM APPROVAL

SACRAMENTO METRO FIRE DISTRICT

APPROVED AS TO FIRE SERVICE LOCATIONS ONLY. MAIN SIZE DETERMINED BY SACRAMENTO SUBURBAN WATER DISTRICT.

BY: DATE:

VERTICAL DATUM
NORTH AMERICAN VERTICAL DATUM OF 1988 (NAVD88)

PROJECT BENCHMARK
FD 2" BRASS DISK STAMPED "SACRAMENTO COUNTY DEPT. OF PUBLIC WORKS 7-61" LOCATED ATOP NORTHEAST ABUTMENT ON THE NORTH SIDE OF WATT AVE. APPROX. 0.4 MI. NORTH OF ANTELOPE RD., APPROX. 0.2 MI NORTH OF BLACKFOOT WAY, APPROX. 0.5 MI, SOUTH OF ELVERTA RD. PER SACRAMENTO COUNTY BENCHMARK LIST.
ELEVATION = 86.43 FEET (NAVD88)

SACRAMENTO COUNTY
PUBLIC WORKS AND INFRASTRUCTURE AGENCY

PROJECT TITLE:	SIERRA CREEK COMMUNITY PARK
ASSESSORS PARCEL NO:	203-0310-045
APPROVED:	
ORDER NUMBER: 90019087	DRAINAGE FEE:
CHECKED BY:	DRAINAGE APPROVED:

APPROVED BY: EXPIRES IN ONE YEAR
COUNTY ENGINEER DATE

Westwood
Westwood Professional Services, Inc.
6200 STONERIDGE MALL ROAD, STE 330
PLEASANTON, CA 94588
T:925.223.8340
westwoodps.com

NO.	DESCRIPTION	DATE	BY	APP. DATE	APP.

7781 WATT AVENUE - SIERRA CREEK COMMUNITY PARK

IMPROVEMENT PLANS
COVER SHEET

DATE: 9-1-2026
DRAFTER: JPJ
DESIGNER: CZW
CHECKED: RIC
PROJECT NO. 41541

REGISTERED PROFESSIONAL ENGINEER ROBERT I CHEN 59425 CIVIL STATE OF CALIFORNIA

1
SHEET 1 OF 13

SACRAMENTO COUNTY, CA

Last Saved by: Czwenrich
Last Saved: 8/28/2026 10:58 AM
Plot Date/Time: 8/28/2026 11:11 AM
Drawing: N:_ODE\Pleasanton\41541 NRWPD Sierra Creek Park\Civil\Cover\Plans\IP01

GENERAL NOTES

1. CONTRACTOR AGREES THAT HE SHALL ASSUME SOLE AND COMPLETE RESPONSIBILITY FOR JOB SITE CONDITIONS DURING THE COURSE OF CONSTRUCTION OF THIS PROJECT, INCLUDING SAFETY OF ALL PERSONS AND PROPERTY; THAT THIS REQUIREMENT SHALL APPLY CONTINUOUSLY AND NOT BE LIMITED TO NORMAL WORKING HOURS; AND THAT THE CONTRACTOR SHALL DEFEND, INDEMNIFY AND HOLD THE OWNER, ENGINEER AND THE COUNTY HARMLESS FROM ANY AND ALL LIABILITY, REAL OR ALLEGED, IN CONNECTION WITH THE PERFORMANCE OF WORK ON THIS PROJECT, EXCEPTING FOR LIABILITY ARISING FROM THE NEGLIGENCE OF THE OWNER OR THE ENGINEER.

2. ALL MATERIALS, WORKMANSHIP, AND CONSTRUCTION SHALL BE DONE IN ACCORDANCE WITH THE REQUIREMENTS OF THE CURRENT COUNTY OF SACRAMENTO, IMPROVEMENT STANDARDS AND SPECIFICATIONS; AND THE LATEST EDITION OF THE STATE OF CALIFORNIA, DEPARTMENT OF TRANSPORTATION, STANDARD SPECIFICATIONS.

3. IT IS INTENDED THAT THESE PLANS AND SPECIFICATIONS REQUIRE ALL LABOR AND MATERIALS NECESSARY AND PROPER FOR THE WORK CONTEMPLATED AND THAT THE WORK BE COMPLETED IN ACCORDANCE WITH THEIR TRUE INTENT AND PURPOSE. THE CONTRACTOR SHALL NOTIFY THE ENGINEER IMMEDIATELY REGARDING ANY DISCREPANCIES OR AMBIGUITIES WHICH MAY EXIST IN THE PLANS OR SPECIFICATIONS. THE ENGINEER'S INTERPRETATION OR CORRECTION THEREOF SHALL BE CONCLUSIVE.

4. WHERE THE PLANS OR SPECIFICATIONS DESCRIBE PORTIONS OF THE WORK IN GENERAL TERMS BUT NOT IN COMPLETE DETAIL, IT IS UNDERSTOOD THAT ONLY THE BEST GENERAL PRACTICE IS TO PREVAIL AND THAT ONLY MATERIALS AND WORKMANSHIP OF THE FIRST QUALITY ARE TO BE USED.

5. THE CONTRACTOR SHALL COORDINATE AND OBTAIN ALL PERMITS AND LICENSES REQUIRED FOR THE CONSTRUCTION AND COMPLETION OF THE PROJECT.

6. CONSTRUCTION STAKING SHALL BE DONE BY THE CONTRACTOR. THE CONTRACTOR SHALL NOTIFY THE COUNTY AND ENGINEER FORTY-EIGHT (48) HOURS IN ADVANCE OF THE NEED FOR STAKING. ANY STAKING REQUESTED BY THE CONTRACTOR OR HIS/HER SUBCONTRACTORS THAT IS ABOVE AND BEYOND NORMAL STANDARD STAKING NEEDS, MAY BE SUBJECT TO AN EXTRA WORK CHARGE. LIMITED TO (4) MOBILIZATIONS.

7. THE CONTRACTOR SHALL EXERCISE DUE CAUTION AND SHALL CAREFULLY PRESERVE BENCH MARKS, REFERENCE POINTS AND ALL SURVEY STAKES, AND SHALL BEAR ALL EXPENSES FOR REPLACEMENT AND/OR ERRORS CAUSED BY THEIR UNNECESSARY LOSS OR DISTURBANCE.

8. PRIOR TO COMMENCING ANY WORK, IT SHALL BE THE CONTRACTOR'S RESPONSIBILITY TO HAVE EACH UTILITY COMPANY LOCATE, IN THE FIELD THEIR MAIN AND SERVICE LINES. THE CONTRACTOR SHALL NOTIFY MEMBERS OF THE UNDERGROUND SERVICE ALERT (USA) 48 HOURS IN ADVANCE OF PERFORMING ANY EXCAVATION WORK BY CALLING THE TOLL FREE NUMBER (800) 642-2444. THE CONTRACTOR SHALL RECORD THE U.S.A ORDER NUMBER AND FURNISH ORDER NUMBER TO THE COUNTY PRIOR TO ANY EXCAVATION. IT SHALL BE THE CONTRACTOR'S SOLE RESPONSIBILITY TO PROTECT ALL EXISTING UTILITIES SO THAT NO DAMAGE RESULTS TO THEM DURING THE PERFORMANCE OF THIS CONTRACT. ANY REPAIRS NECESSARY TO DAMAGED UTILITIES SHALL BE PAID FOR BY THE CONTRACTOR. THE CONTRACTOR SHALL BE REQUIRED TO COOPERATE WITH OTHER CONTRACTORS AND UTILITY COMPANIES INSTALLING NEW STRUCTURES, UTILITIES AND SERVICE TO THE PROJECT.

9. IT SHALL BE THE CONTRACTOR'S RESPONSIBILITY TO NOTIFY THE OFFICE OF THE COUNTY ENGINEER AT LEAST FOURTY-EIGHT (48) HOURS IN ADVANCE OF BEGINNING ANY NEW PHASE OF WORK.

10. FOR ALL WORK WITHIN PUBLIC RIGHT-OF-WAYS, THE CONTRACTOR SHALL OBTAIN A NO FEE ENCROACHMENT PERMIT AND SHALL PRESERVE THE INTEGRITY AND LOCATION OF ANY AND ALL PUBLIC UTILITIES, STREET IMPROVEMENTS AND PROVIDE NECESSARY CONSTRUCTION TRAFFIC CONTROL. THE CONTRACTOR SHALL, THROUGH THE ENCROACHMENT PERMIT PROCESS, VERIFY WITH THE COUNTY OF SACRAMENTO THE NEED FOR ANY DETOUR PLAN. IF A PLAN IS REQUIRED, CONTRACTOR SHALL PROVIDE PLAN AND RECEIVE APPROVAL PRIOR TO CONSTRUCTION.

11. THE CONTRACTOR SHALL MAINTAIN A NEATLY MARKED SET OF FULL-SIZE RECORD DRAWINGS SHOWING THE FINAL LOCATION AND LAYOUT OF ALL ELECTRICAL, PIPING AND CONDUITS, STRUCTURES AND OTHER FACILITIES. AS-BUILT RECORD DRAWINGS SHALL REFLECT CHANGE ORDERS, ACCOMMODATIONS AND ADJUSTMENTS TO ALL IMPROVEMENTS CONSTRUCTED. WHERE NECESSARY, SUPPLEMENTAL DRAWINGS SHALL BE PREPARED BY THE CONTRACTOR AT THEIR COSTS.

12. PRIOR TO ACCEPTANCE OF THE PROJECT, THE CONTRACTOR SHALL DELIVER TO THE ENGINEER, ONE SET OF NEATLY MARKED AS-BUILT RECORD DRAWINGS SHOWING THE INFORMATION REQUIRED ABOVE. AS-BUILT RECORD DRAWINGS SHALL BE REVIEWED AND THE COMPLETE AS-BUILT RECORD DRAWING SET SHALL BE CURRENT WITH ALL CHANGES AND DEVIATIONS REDLINED AS A PRECONDITION TO THE FINAL PROGRESS PAYMENT APPROVAL AND/OR FINAL COUNTY ACCEPTANCE. ODELL ENGINEERING SHALL PROVIDE THE COUNTY WITH A COMPLETE REPRODUCIBLE AS-BUILT RECORD DRAWING SET.

13. IT SHALL BE THE CONTRACTOR'S RESPONSIBILITY TO VERIFY THE LOCATION OF ALL EXISTING FACILITIES TO THEIR SATISFACTION BEFORE COMMENCING WORK.

14. THE COUNTY OF SACRAMENTO OR ASSOCIATED UTILITY COMPANY AND RESIDENCES TO BE AFFECTED SHALL BE NOTIFIED IMMEDIATELY UPON ANY UTILITY SERVICE DISRUPTION OTHER THAN SPECIFIED ON THESE IMPROVEMENT PLANS AND A 48 HOUR NOTICE SHALL BE GIVEN FOR ANY PLANNED DISRUPTION.

    UTILITY COMPANY CONTACT INFORMATION:

    SACRAMENTO MUNICIPAL UTILITY DISTRICT
    ATTN:
    1708 59TH STREET
    SACRAMENTO, CA 95817
    PHONE:(800) 733-7683
    SBS
    ATTN: MARCY SMITH
    3675 T STREET
    SACRAMENTO, CA 95816
    PHONE: (800)300-0863

    COMCAST
    ATTN STEVE ABELIA
    1242 NATIONAL DRIVE
    SACRAMENTO, CA95834
    PHONE:1-(800)266-2278

    INTEGRA TELECOM
    ATTN: RONALD CHAMBERLAIN
    2495 NATOMAS PARK DRIVE, STE 300
    SACRAMENTO, CA 95833
    PHONE:(916)281-2400

    FRONTIER COMMUNITCATIONS
    ATTN: SUMMER SIMUNICH
    9260 E. STOCKTON BLVD.
    ELK GROVE, CA 95624
    PHONE:(916)691-5612

15. CONTRACTOR SHALL BE RESPONSIBLE FOR COORDINATION OF THE REMOVAL OR RELOCATION OF ALL EXISTING UTILITIES WITH RESPECTIVE UTILITY COMPANIES.

16. IF REQUIRED, THE CONTRACTOR SHALL DETERMINE THE PROPER WELL PLACEMENTS TO ADEQUATELY DEWATER THE AREA FOR TRENCHING.

17. THE CONTRACTOR SHALL PROVIDE SHORING, BRACING, SLOPING OR PROVISIONS TO PROTECT WORKMEN FOR ALL AREAS TO BE EXCAVATED TO A DEPTH OF FIVE FEET OR MORE. SAID PROTECTION TO BE DONE IN ACCORDANCE WITH THE REQUIREMENTS OF THE COUNTY OF SACRAMENTO DEPARTMENT OF PUBLIC WORKS, AND STATE REGULATIONS.

18. EXCAVATIONS OF 5 FEET OR MORE IN DEPTH WILL REQUIRE AN EXCAVATIONS PERMIT FROM THE STATE OF CALIFORNIA DEPARTMENT OF INDUSTRIAL SAFETY. FOR TRENCHES 5 FEET OR MORE IN DEPTH, THE CONTRACTOR SHALL COMPLY WITH SECTION 5-1.02A OF THE CALTRANS STANDARDS, CHAPTER 9 OF THE STATE OF CALIFORNIA LABOR CODE AND ANY LOCAL CODES OR ORDINANCES.

19. THE CONTRACTOR SHALL PROVIDE ALL LIGHTS, SIGNS, BARRICADES, FLAGMEN OR OTHER DEVICES NECESSARY TO PROVIDE FOR PUBLIC SAFETY IN ORDINANCE WITH THE CURRENT ISSUE OF "MANUAL OF UNIFORM TRAFFIC CONTROLS".

20. YOUR ATTENTION IS CALLED TO TITLE 8 CALIFORNIA ADMINISTRATION CODE SECTION 1540 (A) (1) OF THE CONSTRUCTION SAFETY ORDERS ISSUED BY THE OCCUPATION SAFETY AND HEALTH STANDARDS BOARD PURSUANT TO THE CALIFORNIA OCCUPATIONS SAFETY AND HEALTH ACT OF 1973 AS AMENDED WHICH STATES:

    (1) PRIOR TO OPENING AND EXCAVATION, EFFORT SHALL BE MADE TO DETERMINE WHETHER UNDERGROUND INSTALLATIONS; I.E., SEWER, WATER, FUEL, ELECTRIC LINES, ETC., WILL BE ENCOUNTERED AND IF SO, WHERE SUCH UNDERGROUND INSTALLATIONS ARE LOCATED WHEN THE EXCAVATION APPROACHES THE APPROXIMATE LOCATION OF SUCH AN INSTALLATION, THE EXACT LOCATION SHALL BE DETERMINED BY CAREFUL PROBING OR HAND DIGGING; AND, WHEN IT IS UNCOVERED ADEQUATE PROTECTION SHALL BE PROVIDED FOR THE EXISTING INSTALLATION. ALL KNOWN OWNERS OF UNDERGROUND FACILITIES IN THE AREA CONCERNED SHALL BE ADVISED OF PROPOSED WORK AT LEAST FORTY-EIGHT (48) HOURS PRIOR TO THE START OF ACTUAL EXCAVATION.

21. WHENEVER PAVEMENT IS BROKEN OR CUT IN THE INSTALLATION OF THE WORK COVERED BY THESE IMPROVEMENTS, THE PAVEMENT SHALL BE REPLACED, AFTER PROPER BACKFILLING, WITH PAVEMENT MATERIALS EQUAL TO OR BETTER THAN THE MATERIALS USED IN THE ORIGINAL PAVING. THE FINISHED PAVEMENT SHALL BE SUBJECT TO THE APPROVAL OF THE COUNTY OF SACRAMENTO

22. PAYMENT FOR PAVEMENT WILL BE MADE ONLY FOR AREAS SHOWN ON THE PLANS TO BE REPLACED, REPLACEMENT OF PAVEMENT WHICH IS BROKEN OR CUT DURING THE INSTALLATION OF THE WORK COVERED BY THESE IMPROVEMENT PLANS, AND WHICH LIES OUTSIDE OF SAID AREAS, SHALL BE INCLUDED IN THE CONTRACTOR'S UNIT PRICE FOR PAVEMENT, AND NO ADDITIONAL PAYMENT SHALL BE MADE FOR SUCH WORK.

23. ALL AREAS TO RECEIVE ASPHALT CONCRETE PAVEMENT SHALL RECEIVE A SEAL COAT IN ACCORDANCE WITH SECTION 37, "BITUMINOUS SEALS" OF THE STATE STANDARD SPECIFICATIONS.

24. WORK IN STREET RIGHT-OF-WAY SHALL BE SUBJECT TO THE APPROVAL AND ACCEPTANCE OF THE COUNTY OF SACRAMENTO PUBLIC WORKS DEPARTMENT.

25. THE CONTRACTOR SHALL BE RESPONSIBLE FOR THE REPLACEMENT OF ALL STRIPING AND PAVEMENT MARKING NECESSARY TO TIE EXISTING STRIPING INTO FUTURE STRIPING AS APPROVED BY THE COUNTY OF SACRAMENTO.

SACRAMENTO COUNTY NOTES

1. ALL CONSTRUCTION AND MATERIALS SHALL BE IN ACCORDANCE WITH THE COUNTY OF SACRAMENTO STANDARD CONSTRUCTION SPECIFICATIONS AND IMPROVEMENT STANDARDS. WHERE INCONSISTENCIES EXIST, THE LATEST EDITION SHALL TAKE PRECEDENCE.

2. PUBLIC CONVENIENCE, PUBLIC SAFETY AND TRAFFIC CONTROL SHALL BE PROVIDED IN ACCORDANCE WITH SECTIONS 12-2 AND 12-3 OF THE STANDARD CONSTRUCTION SPECIFICATIONS AND AS DIRECTED BY THE COUNTY INSPECTOR. SAFE VEHICULAR AND PEDESTRIAN ACCESS SHALL BE PROVIDED AT ALL TIMES DURING CONSTRUCTION.

3. THE CONSULTANT ENGINEER SHALL NOTIFY THE COUNTY OF SACRAMENTO CONSTRUCTION OFFICE [PHONE: (916) 875-2700] UPON COMPLETION OF STAKING.

4. THE CONTRACTOR SHALL NOTIFY THE COUNTY OF SACRAMENTO CONSTRUCTION INSPECTION OFFICE TWO (2) WORKING DAYS PRIOR TO THE INTENTION TO COMMENCE WORK. THE CONTRACTOR SHALL NOT START ANY GRADING UNTIL THE COUNTY COMPLETES A PRE-CONSTRUCTION MEETING [(916) 875-2700].

5. THE COUNTY OF SACRAMENTO IS A MEMBER OF THE UNDERGROUND SERVICE ALERT (USA) ONE CALL PROGRAM. THE CONTRACTOR OR ANY SUBCONTRACTOR FOR THIS CONTRACT SHALL NOTIFY MEMBERS OF USA TWO (2) WORKING DAYS IN ADVANCE OF PERFORMING ANY EXCAVATION WORK BY CALLING THE TOLL-FREE NUMBER: 1(800) 227-2600.
    THOMAS BROTHERS MAP PAGE __ INDEX __.

6. THE CONTRACTOR SHALL BE RESPONSIBLE FOR THE PROTECTION OF ALL EXISTING SURVEY MONUMENTS OR MARKERS. MONUMENTS OR MARKERS DESTROYED DURING CONSTRUCTION SHALL BE REPLACED AT THE CONTRACTOR'S EXPENSE.

7. ALL SERVICE SEWERS SHALL HAVE FOUR (4) TO FIVE (5) FEET OF COVER AT THE PROPERTY LINE OR RIGHT-OF-WAY, UNLESS OTHERWISE NOTED ON PLANS.

8. EROSION CONTROL MEASURES SHALL BE IN ACCORDANCE WITH SECTION 11 OF THE COUNTY OF SACRAMENTO IMPROVEMENT STANDARDS.

9. THE CONTRACTOR SHALL NOTIFY THE COUNTY INSPECTOR IF EXCESS SOIL IS DISPOSED OFF-SITE. THE DISPOSAL OF EXCESS SOIL SHALL NOT COMMENCE UNTIL THE COUNTY INSPECTOR HAS VERIFIED THAT THE EXPORT SITE IS NOT SUBJECT TO THE COUNTY GRADING ORDINANCE NOR THE FLOODPLAIN ORDINANCE.

10. ALL TRENCH RESTORATION SHALL COMPLY WITH SECTION 14 "RESTORATION OF SURFACES" OF THE SACRAMENTO COUNTY STANDARD CONSTRUCTION SPECIFICATIONS.

11. CMID INSPECTOR SHALL FIELD MARK ANY DEFECTIVE PUBLIC CURBS, GUTTERS, SIDEWALKS, OR DRIVEWAYS (UNEVEN, BROKEN, PROJECTING, OR DETERIORATING), NOT SPECIFICALLY IDENTIFIED ON THE IMPROVEMENT PLANS, FOR REPAIR AND/OR REPLACEMENT DURING THE TIME OF CONSTRUCTION AS NECESSARY FOR PUBLIC HEALTH AND SAFETY. REMOVAL AND REPLACEMENT ARE REQUIRED IF THE VERTICAL CHANGE EXCEEDS ONE-HALF INCH OR IF ANY CRACKS EXCEED ONE-QUARTER INCH IN WIDTH. MODIFICATION (I.E., GRINDING & PATCHING) OF SIDEWALKS IS REQUIRED IF THE VERTICAL CHANGE IN SIDEWALK AREA EXCEEDS ONE-QUARTER INCH BUT LESS THAN ONE-HALF INCH. IN SOME CASES, TREE ROOTS MAY BE ENCOUNTERED WHICH MAY REQUIRE CUTTING TREE ROOTS OR TREE REMOVAL TO DO THE NECESSARY REPAIRS

    (PLEASE REFER TO SECTIONS 10-13 AND 15-1 OF THE COUNTY STANDARD CONSTRUCTION SPECIFICATIONS FOR SPECIFIC REQUIREMENTS). A COUNTY TREE PERMIT IS REQUIRED FOR ANY NATIVE OAK TREE ROOT CUTTING WITHIN THE DRIPLINE OF THE TREE. IMPROVEMENTS WILL ONLY BE REQUIRED WITHIN THE PROPERTY LIMITS/BOUNDARY OF THE PROJECT SITE.

12. THE PAY REDUCTION FACTORS NOTED IN SECTION 23-9.02 DO NOT APPLY TO PRIVATELY CONSTRUCTED PROJECT(S). IF THE PERCENT OF THEORETICAL MAXIMUM DENSITY DOES NOT COMPLY WITH THE REQUIREMENTS OF THE STANDARD CONSTRUCTION SPECIFICATIONS, THE CONTRACTOR SHALL REMOVE AND REPLACE THE LIMITS AS FIELD MARKED BY THE CMID INSPECTOR.

13. THE CONTRACTOR SHALL BE RESPONSIBLE FOR THE PROTECTION OF ALL EXISTING SURVEY MONUMENTS OR MARKERS. MONUMENTS OR MARKERS DESTROYED DURING CONSTRUCTION SHALL BE REPLACED AT THE CONTRACTOR'S EXPENSE

ASPHALT CONCRETE NOTES

ANY PAVEMENT WORK WITHIN COUNTY R/W SHALL BE SUBJECT TO SECTION 23 OF THE STANDARD CONSTRUCTION SPECIFICATIONS AS MODIFIED BELOW:

1. TEST METHODS: THE FOLLOWING IS ADDED AFTER THE SECOND PARAGRAPH OF SECTION 23-2.04, "TEST METHODS" OF THE STANDARD CONSTRUCTION SPECIFICATIONS:

    ALL REFERENCES TO AASHTO T 308 IN SECTION 23 MUST BE REPLACED WITH AASHTO T 308 (MODIFIED).

    AASHTO T 308 (MODIFIED) IS AASHTO T 308 WITH THE FOLLOWING PARAMETERS:

    1) BATCH SAMPLES DOWN TO NO.8 SIEVE.
    2) REPLACE NO. 40 SIEVE WITH NO.100 SIEVE.
    3) REPLACE SECTION A2.9.2 WITH: DETERMINE THE AVERAGE DIFFERENCE FOR THE TWO VALUES. THE AGGREGATE CORRECTION FACTORS (EQUAL TO THE RESULTANT AVERAGE DIFFERENCES) FOR ALL SIEVES MUST BE APPLIED TO ALL ACCEPTANCE GRADATION TEST RESULTS DETERMINED BY T 30, PRIOR TO FINAL ROUNDING AND REPORTING.

    ALL REFERENCES TO AASHTO T 27 IN SECTION 23 MUST BE REPLACED WITH AASHTO T 30 AND CALIFORNIA TEST 384 MUST NOT BE USED TO TEST THE COMBINED AGGREGATE GRADATION.

2. GRADATIONS: THE FOLLOWING IS ADDED BEFORE THE FIRST PARAGRAPH OF SECTION 23-3.01.C, "GRADATIONS" OF THE STANDARD CONSTRUCTION SPECIFICATIONS:

    TEST FOR AGGREGATE GRADATION UNDER AASHTO T30.
    CHOOSE A TV WITHIN THE TV LIMITS SHOWN IN THE TABLES TITLED "AGGREGATE GRADATIONS FOR HMA-LG."

    GRADATIONS ARE BASED ON NOMINAL MAXIMUM SIZE AGGREGATE.

3. GRADATIONS: THE FIRST PARAGRAPH OF SECTION 23-5.04.B.2 "GRADATIONS" OF THE STANDARD CONSTRUCTION SPECIFICATIONS IS DELETED.

4. AGGREGATE GRADATIONS: THE FOLLOWING IS ADDED BEFORE THE FIRST PARAGRAPH OF SECTION 23-10.06.C.2, "AGGREGATE GRADATIONS" OF THE STANDARD CONSTRUCTION SPECIFICATIONS:

    TEST FOR AGGREGATE GRADATION UNDER AASHTO T30.

    CHOOSE A TV WITHIN THE TV LIMITS SHOWN IN THE TABLES TITLED "AGGREGATE GRADATIONS FOR RHMA-G."
    GRADATIONS ARE BASED ON NOMINAL MAXIMUM SIZE AGGREGATE.

SUPPLEMENTAL NOTES

- WHENEVER THE WORK AREA IS ADJACENT TO A TRAFFIC LANE AND THERE IS A CUT, DITCH OR TRENCH MORE THAN TWO (2) INCHES DEEP, THE CONTRACTOR SHALL MAINTAIN CONTINUOUS BARRICADES SPACED AT APPROXIMATELY 20?FOOT INTERVALS FOR THE FIRST 100 FEET FROM THE BEGINNING OF THE CUT, DITCH OR TRENCH, AND APPROXIMATELY 50? FOOT INTERVALS THEREAFTER. IF THE CUT, DITCH OR TRENCH IS MORE THAN TEN (10) FEET FROM A TRAFFIC LANE, THE BARRICADE SPACING SHALL BE GREATER BUT SHALL NOT EXCEED 200 FEET. UNLESS SPECIFICALLY SET FORTH AS SPECIAL PROVISIONS, ALL MARKED LANES OF TRAFFIC SHALL BE UNOBSTRUCTED IN EACH DIRECTION DURING PEAK TRAFFIC HOURS OF 7:00 TO 8:00 AM AND 3:30 TO 6:00 PM. A TRAFFIC LANE SHALL BE CONSIDERED UNOBSTRUCTED IF IT IS SURFACED WITH ASPHALT AND IS AT LEAST TEN (10) FEET WIDE.

(FOR PROJECTS WITH TRENCHING WITHIN THE COUNTY RIGHT-OF-WAY)

- A TRAFFIC CONTROL PLAN SHALL BE PREPARED BY THE CONTRACTOR AND SUBMITTED TO SACRAMENTO COUNTY CONSTRUCTION MANAGEMENT AND INSPECTION DIVISION FOR REVIEW AT LEAST TWENTY (20) DAYS PRIOR TO COMMENCEMENT OF ANY WORK. PLAN APPROVAL MUST FIRST BE OBTAINED PRIOR TO COMMENCEMENT OF ANY WORK WITHIN THE COUNTY RIGHT-OF-WAY.

- EROSION AND SEDIMENT CONTROL MEASURES FOR THIS PROJECT SHALL BE IN SUBSTANTIAL COMPLIANCE WITH THE STORM WATER POLLUTION PREVENTION PLAN (SWPPP) PREPARED FOR THE PROJECT IN ACCORDANCE WITH THE STATE'S GENERAL PERMIT FOR CONSTRUCTION ACTIVITIES. ACCORDING TO STATE LAW, IT IS THE RESPONSIBILITY OF THE PROPERTY OWNER TO MAINTAIN SWPPP UP-TO-DATE TO REFLECT CHANGING CONDITIONS AND ENSURE MOST CURRENT SWPPP IS AVAILABLE ON THE PROJECT SITE AT ALL TIMES FOR REVIEW BY COUNTY AND STATE INSPECTORS.

CHANGES/AUTHORIZED CHANGES

1. LANDSCAPE ARCHITECTS AND THE ENGINEERS PREPARING THESE PLANS WILL NOT BE RESPONSIBLE FOR OR LIABLE FOR UNAUTHORIZED CHANGES TO OR USES OF THESE PLANS. ALL CHANGES TO THESE PLANS MUST BE IN WRITING AND MUST BE APPROVED BY THE PREPARER OF THESE PLANS AND THE COUNTY ENGINEER.

AS-BUILT DRAWINGS

1. UPON COMPLETION OF THE WORK, THE CONTRACTOR SHALL FURNISH TO THE CLIENT (PRIOR TO THE ACCEPTANCE OF THE WORK BY THE CLIENT) "AS-BUILT" DRAWINGS OF THE WORK.

GRADING

1. THE GRADES SHOWN HERON ARE INTENDED TO PROVIDE A BALANCED EARTHWORK. IT SHALL BE THE RESPONSIBILITY OF THE GRADING CONTRACTOR, DURING THE GRADING OPERATION, TO VERIFY THE EARTHWORK QUANTITIES AND PROVIDE A BALANCED EARTHWORK. ANY CHANGES IN PROPOSED GRADES IN ORDER TO ACHIEVE AN EARTHWORK BALANCE MUST BE COORDINATED WITH THE ENGINEER AND THE COUNTY. THERE WILL BE NO EXTRA COMPENSATION DUE THE CONTRACTOR BECAUSE OF THESE ADJUSTMENTS.

INSPECTIONS

1. ALL EXCAVATIONS, FORMS, REINFORCEMENT, ELECTRICAL, PIPING, FOUNDATIONS, ETC., SHALL BE INSPECTED AND APPROVED BEFORE BACKFILL OR CONCRETE IS PLACED, AND IF FOUND UNSATISFACTORY THE WORK SHALL NOT PROCEED UNTIL ALL DEFECTS HAVE BEEN REMEDIED. APPROVAL WILL IN NO WAY RELIEVE THE CONTRACTOR OF HIS OBLIGATIONS TO PRODUCE THE FINISHED IMPROVEMENT REQUIRED BY THE PLANS AND SPECIFICATIONS. 48 HOUR PRIOR NOTICE IS REQUIRED FOR INSPECTIONS.

GUARANTEE

1. EXCEPT AS OTHERWISE PROVIDED FOR IN THE PROJECT SPECIFICATIONS, AND EXCEPTING ONLY ITEMS OF ROUTINE MAINTENANCE, ORDINARY WEAR AND TEAR AND UNUSUAL ABUSE OR NEGLECT, THE CONTRACTOR GUARANTEES ALL WORK EXECUTED BY HE/SHE AND ALL SUPPLIES, MATERIALS AND DEVICES OF WHATSOEVER NATURE INCORPORATED IN, OR ATTACHED TO THE WORK, OR OTHERWISE DELIVERED TO THE COUNTY AS A PART OF THE WORK PURSUANT TO THE CONTRACT, TO BE ABSOLUTELY FREE OF ALL DEFECTS OF WORKMANSHIP AND MATERIALS FOR A PERIOD OF ONE YEAR AFTER FINAL ACCEPTANCE OF THE ENTIRE WORK BY THE COUNTY. THE CONTRACTOR SHALL, AT THE DISCRETION OF THE COUNTY ENGINEER, EITHER REPAIR OR REPLACE ANY OR ALL SUCH WORK OR MATERIAL, TOGETHER WITH ALL OR ANY OTHER WORK OR MATERIAL WHICH MAY BE DISPLACED OR DAMAGED IN SO DOING, THAT MAY PROVE DEFECTIVE IN WORKMANSHIP OR MATERIAL WITHIN THE ONE YEAR GUARANTEE PERIOD WITHOUT EXPENSE OR CHARGE OF ANY NATURE WHATSOEVER TO THE COUNTY. IF REPAIRS OR REPLACEMENT ARE REQUIRED, THE REPAIRED ITEMS WILL BE GUARANTEED FREE OF DEFECTS FOR AN ADDITIONAL YEAR FROM THE DATE OF COUNTY ACCEPTANCE OF THE REPAIRS OR REPLACEMENT WORK.

2. IN THE EVENT THAT THE CONTRACTOR FAILS TO COMPLY WITH THE CONDITIONS OF THE FOREGOING GUARANTEE WITHIN TEN CALENDAR DAYS AFTER THE DATE OF WRITTEN NOTIFICATION OF THE DEFECT, THE COUNTY SHALL HAVE THE RIGHT, BUT SHALL NOT BE OBLIGATED TO REPAIR, OR OBTAIN THE REPAIR OF, THE DEFECT AND THE CONTRACTOR SHALL PAY TO THE COUNTY ON DEMAND ALL COSTS AND EXPENSES ASSOCIATED WITH THE REPAIR. NOTWITHSTANDING ANYTHING HEREIN TO THE CONTRARY, IF ANY DEFECT IN WORKMANSHIP OR MATERIAL COVERED BY THE FOREGOING GUARANTEE RESULTS IN AN IMMEDIATE HAZARD TO THE HEALTH OR SAFETY OF ANY PERSON OR ANY PROPERTY THEN THE COUNTY SHALL HAVE THE RIGHT TO IMMEDIATELY REPAIR, OR CAUSE TO BE REPAIRED, SUCH DEFECT, AND THE CONTRACTOR SHALL PAY TO THE COUNTY ON DEMAND ALL COSTS AND EXPENSE OF THE REPAIR. THE FOREGOING STATEMENT RELATING TO HAZARDS TO HEALTH, SAFETY OR PROPERTY SHALL BE DEEMED TO INCLUDE EITHER TEMPORARY OR PERMANENT REPAIRS WHICH MAY BE REQUIRED AS DETERMINED BY THE SOLE DISCRETION AND JUDGMENT OF THE COUNTY ENGINEER.

INDEMNIFICATION

1. THE CONTRACTOR SHALL HOLD HARMLESS, DEFEND AND INDEMNIFY THE COUNTY, ITS AGENTS, OFFICERS, OFFICIALS, EMPLOYEES AND VOLUNTEERS FROM AND AGAINST ALL CLAIMS, DAMAGES, LOSSES AND EXPENSES, INCLUDING ATTORNEY FEES, ARISING OUT OF THE PERFORMANCE OF THE WORK DESCRIBED HEREIN, CAUSED IN WHOLE OR IN PART BY ANY NEGLIGENT ACT OR OMISSION OF THE CONTRACTOR, ANY SUBCONTRACTOR, ANYONE DIRECTLY OR INDIRECTLY EMPLOYED BY ANY OF THEM OR ANYONE FOR WHOSE ACTS ANY OF THEM MAY BE LIABLE, EXCEPT WHERE CAUSED BY THE ACTIVE NEGLIGENCE OR WILLFUL MISCONDUCT OF THE COUNTY.

PUBLIC CONVENIENCE AND SAFETY

1. THE CONTRACTOR SHALL CONDUCT HIS OPERATIONS SO AS TO RESULT IN THE LEAST POSSIBLE INCONVENIENCE TO THE GENERAL PUBLIC AND TO THE RESIDENTS IN THE VICINITY OF THE WORK. PUBLIC CONVENIENCE AND SAFETY SHALL CONFORM TO §7-1.08 "PUBLIC CONVENIENCE" AND §7-1.09, "PUBLIC SAFETY" OF THE STATE STANDARDS, AND THE CALIFORNIA MANUAL ON UNIFORM TRAFFIC CONTROL DEVICES. IF LANE OR STREET CLOSURES ARE REQUIRED FOR THE WORK THEN THE CONTRACTOR SHALL SUBMIT A TRAFFIC CONTROL PLAN TO THE COUNTY FOR APPROVAL 72 HOURS (3 WORKING DAYS) BEFORE CLOSURE. IN ADDITION, THE CONTRACTOR SHALL CONFORM TO THE RULES AND REGULATIONS PERTAINING TO SAFETY ESTABLISHED BY THE CALIFORNIA DIVISIONS OF INDUSTRIAL SAFETY.

    TRAFFIC CONTROLS THROUGH THE CONSTRUCTION ZONE SHALL BE DESIGNED AND MAINTAINED BY A DESIGNATED INDIVIDUAL QUALIFIED IN THIS RESPONSIBILITY. EVIDENCE OF QUALIFICATION MAY BE A CERTIFICATE OF COMPLETION OF A COURSE ENTITLED "SAFETY THROUGH MAINTENANCE AND CONSTRUCTION ZONES," ISSUED BY THE INSTITUTE OF TRANSPORTATION ENGINEERS (ITE).

    THE CONTRACTOR SHALL FURNISH, ERECT, AND MAINTAIN FENCES, BARRIERS, LIGHTS AND SIGNS NECESSARY TO GIVE ADEQUATE WARNING TO THE PUBLIC AT ALL TIMES THAT THE WORK IS IN PROGRESS AND OF ANY DANGEROUS CONDITIONS THAT MAY BE ENCOUNTERED AS A RESULT. THE CONTRACTOR SHALL ALSO ERECT AND MAINTAIN WARNING SIGNS REQUIRED BY THE COUNTY. TEMPORARY TRAFFIC CONTROLS AND MARKINGS SHALL BE REMOVED BY THE CONTRACTOR WHEN NO LONGER NEEDED.

2. BEFORE EXCAVATING ANY TRENCH 4 FEET OR MORE IN DEPTH (OR AT LESSER DEPTHS AS WARRANTED BY SITE SOILS CONDITIONS AND AS DETERMINED BY A QUALIFIED, CALIFORNIA REGISTERED SOILS ENGINEER) THE CONTRACTOR SHALL SUBMIT A DETAILED PLAN TO THE COUNTY SHOWING THE DESIGN OF SHORING, BRACING, SLOPING, OR OTHER PROVISIONS TO BE MADE FOR THE WORKERS' PROTECTION FROM THE HAZARD OF CAVING GROUND DURING THE EXCAVATION OF THE TRENCH. THE PLAN SHALL BE PREPARED BY A REGISTERED CIVIL ENGINEER. NO EXCAVATION SHALL START UNTIL THE COUNTY HAS ACCEPTED THE PLAN AND THE CONTRACTOR HAS OBTAINED A PERMIT FROM THE STATE DIVISION OF INDUSTRIAL SAFETY. A COPY OF THE PERMIT SHALL BE SUBMITTED TO THE COUNTY PRIOR TO THE WORK.

3. NOTICE TO AGENCIES – THE CONTRACTOR SHALL PROVIDE WRITTEN NOTIFICATION TO ALL AGENCIES HAVING JURISDICTION AT LEAST 48 HOURS (2 WORKING DAYS) PRIOR TO INSTITUTING ANY LANE CLOSURE OR DETOUR. AT THE END OF EACH DAY'S WORK, THE CONTRACTOR SHALL INFORM AMBULANCE SERVICES AND POLICE AND FIRE DEPARTMENTS OF THE STATUS OF ALL DETOURS AND/OR LANES OR ROAD CLOSURES. THE CONTRACTOR SHALL COOPERATE WITH THE U.S. POSTAL SERVICE, COLLECTION SERVICES FOR TRASH AND GARBAGE, AND BUS SERVICES TO MAINTAIN EXISTING SCHEDULES FOR THESE SERVICES.

4. EMERGENCY VEHICLE ACCESS THROUGH DETOURS – DURING ALL DETOURS AND/OR STREET CLOSURES, THE CONTRACTOR SHALL PROVIDE FOR THE UNENCUMBERED MOVEMENT OF EMERGENCY VEHICLES THROUGH THE WORK AREA. THE CONTRACTOR'S WORK AND EQUIPMENT SHALL NOT IMPEDE MOVEMENT FROM ANY FIRE OR POLICE STATION TO ANY AREA OF THEIR JURISDICTION.

5. ACCESS TO PRIVATE PROPERTY – THE CONTRACTOR SHALL SCHEDULE OPERATIONS TO MINIMIZE DISRUPTION OF ACCESS TO PRIVATE PROPERTY. PRIOR TO BLOCKING ACCESS TO ANY PRIVATE DRIVEWAY OR PARKING LOT ENTRANCE, THE CONTRACTOR SHALL NOTIFY THE RESIDENT OR BUSINESS OWNER OR TENANT OF PENDING CLOSURE AND ALLOW RESIDENTS TO REMOVE VEHICLES. DURING NON-WORKING HOURS DRIVEWAYS, HOUSES OR PARKING LOTS SHALL NOT BE DENIED ACCESS TO A PUBLIC ROADWAY.

6. NIGHT DETOUR

SACRAMENTO COUNTY DEPARTMENT OF WATER RESOURCES DRAINAGE NOTES:

1. ALL CONSTRUCTION AND MATERIALS FOR DRAINAGE SHALL BE IN ACCORDANCE WITH THE LATEST EDITION OF THE COUNTY OF SACRAMENTO IMPROVEMENT STANDARDS AND STANDARD CONSTRUCTION SPECIFICATIONS.WHERE DISCREPANCIES EXIST, APPROPRIATE NOTES SHALL BE ADDED TO THE PLANS, TAKING PRECEDENCE OVER THE STANDARD CONSTRUCTION SPECIFICATIONS.
2. THE MINIMUM COVER REQUIREMENTS DURING CONSTRUCTION FOR TEMPORARY CONSTRUCTION VEHICLE LOADING SHALL BE 4 FEET FOR METAL AND PLASTIC PIPE AND 3 FEET FOR REINFORCED CONCRETE PIPE.
3. THE CONTRACTOR SHALL PLACE THE PROPER STRENGTH PIPE IF TRENCH CONDITIONS ENCOUNTERED DIFFER FROM THE DESIGN TRENCH.
4. DRAINAGE IN PUBLIC RIGHT-OF-WAY (ROW) AND DRAINAGE EASEMENTS SHALL CONFORM TO THE FOLLOWING:
   - DRAINAGE PIPE MATERIAL SHALL CONFORM TO SECTION 36 AND SECTION 50 (EXCLUDING 50-20, WHICH IS NOT ALLOWED) OF THE STANDARD CONSTRUCTION SPECIFICATIONS.
   - DRAINAGE MANHOLES SHALL CONFORM TO SECTION 39 OF THE STANDARD CONSTRUCTION SPECIFICATIONS.
5. TESTING OF DRAINAGE SYSTEMS. DRAINAGE IN PUBLIC ROW AND DRAINAGE EASEMENTS SHALL CONFORM TO THE FOLLOWING:
   - DRAINAGE PIPES, INCLUDING DRAIN INLET LATERALS, SHALL BE TESTED IN CONFORMANCE WITH SECTION 38-10 OF THE STANDARD CONSTRUCTION SPECIFICATIONS.
   - STORM DRAIN MANHOLES SHALL BE TESTED IN CONFORMANCE WITH SECTION 39-4.02 OF THE STANDARD CONSTRUCTION SPECIFICATIONS.
6. RESILIENT CONNECTORS, IN CONFORMANCE WITH SECTION 39-2.02 AND STD DWG 9-7A OF THE STANDARD CONSTRUCTION SPECIFICATIONS, ARE REQUIRED BETWEEN PRE-CAST MANHOLE AND PIPE AND BETWEEN PRE-CAST DROP INLET AND PIPE. WATER STOPS ARE REQUIRED FOR PIPE TO CAST-IN-PLACE MANHOLE/DROP INLET CONNECTIONS.
7. EROSION CONTROL STRUCTURES (STD DWG 9-27) SHALL BE CLASS B CONCRETE, NOT GROUTED COBBLE.
8. ALL DRAINAGE INLETS IN PUBLIC ROW AND DRAINAGE EASEMENTS SHALL HAVE A PERMANENT STORM DRAIN MESSAGE "NO DUMPING-FLOWS TO CREEK" OR OTHER APPROVED MESSAGE CONSISTENT WITH 11-10A AND 11-10B OF THE SACRAMENTO COUNTY IMPROVEMENT STANDARDS.
9. ALL CONNECTIONS TO DRAINAGE INLETS SHALL BE ON THE FACE OR SIDE ALLOWING A MINIMUM OF 6 INCHES FROM CORNER. CONNECTIONS TO CORNERS OF DRAIN INLETS IS NOT ALLOWED.
10. OBLIQUE CONNECTIONS TO DRAINAGE INLETS SHALL NOT EXCEED 20 DEGREES FROM PERPENDICULAR.
11. POLYVINYL CHLORIDE (PVC) PIPE SHALL CONFORM TO THE CONSTRUCTION SPECIFICATIONS, SECTION 50-26.
12. HIGH-DENSITY POLYPROPYLENE (HDPE) PIPE SHALL NOT BE USED FOR PUBLIC STORM DRAINS.

MITIGATION MEASURE A: SMAQMD BASIC CONSTRUCTION EMISSION CONTROL PRACTICES

COMPLY WITH BASIC CONSTRUCTION EMISSION CONTROL PRACTICES IDENTIFIED BY THE SMAQMD AND LISTED BELOW OR AS THEY MAY BE UPDATED IN THE FUTURE:

1. WATER ALL EXPOSED SURFACES TWO TIMES DAILY. EXPOSED SURFACES INCLUDE, BUT ARE NOT LIMITED TO SOIL PILES, GRADED AREAS, UNPAVED PARKING AREAS, STAGING AREAS, AND ACCESS ROADS.
2. COVER OR MAINTAIN AT LEAST TWO FEET OF FREE BOARD SPACE ON HAUL TRUCKS TRANSPORTING SOIL, SAND, OR OTHER LOOSE MATERIAL ON THE SITE. ANY HAUL TRUCKS THAT WOULD BE TRAVELING ALONG FREEWAYS OR MAJOR ROADWAYS SHOULD BE COVERED.
3. USE WET POWER VACUUM STREET SWEEPERS TO REMOVE ANY VISIBLE TRACK OUT MUD OR DIRT ONTO ADJACENT PUBLIC ROADS AT LEAST ONCE A DAY. USE OF DRY POWERED SWEEPING IS PROHIBITED.
4. LIMIT VEHICLE SPEEDS ON UNPAVED ROADS TO 15 MILES PER HOUR (MPH).
5. ALL ROADWAYS, DRIVEWAYS, SIDEWALKS, PARKING LOTS TO BE PAVED SHOULD BE COMPLETED AS SOON AS POSSIBLE. IN ADDITION, BUILDING PADS SHOULD BE LAID AS SOON AS POSSIBLE AFTER GRADING UNLESS SEEDING OR SOIL BINDERS ARE USED.
6. MINIMIZE IDLING TIME EITHER BY SHUTTING EQUIPMENT OFF WHEN NOT IN USE OR REDUCING THE TIME OF IDLING TO 5 MINUTES [REQUIRED BY CALIFORNIA CODE OF REGULATIONS, TITLE 13, SECTIONS 2449(D) AND 2485]. PROVIDE CLEAR SIGNAGE THAT POSTS THIS REQUIREMENT FOR WORKERS AT THE ENTRANCES TO THE SITE.
7. PROVIDE CURRENT CERTIFICATE(S) OF COMPLIANCE FOR CARB'S IN-USE OFF-ROAD DIESEL-FUELED FLEETS REGULATION [CALIFORNIA CODE OF REGULATIONS, TITLE 13, SECTIONS 2449 AND 2449.1]. FOR MORE INFORMATION CONTACT CARB AT 877-593-6677, DOORS@ARB.CA.GOV, OR WWW.ARB.CA.GOV/DOORS/COMPLIANCE CERT1HTML
8. MAINTAIN ALL CONSTRUCTION EQUIPMENT IN PROPER WORKING CONDITION ACCORDING TO MANUFACTURER'S SPECIFICATIONS. THE EQUIPMENT MUST BE CHECKED BY A CERTIFIED MECHANIC AND DETERMINED TO BE RUNNING IN PROPER CONDITION BEFORE IT IS OPERATED.

MITIGATION MEASURE B: IMPLEMENT MEASURES TO REDUCE SHORT-TERM, CONSTRUCTION-RELATED NOISE

1. PROVIDE WRITTEN NOTIFICATION TO THE RESIDENTS SOUTH OF THE PROJECT SITE AND WITHIN 500 FEET FROM THE SOUTHERN PROJECT BOUNDARY AT LEAST THREE WEEKS PRIOR TO CONSTRUCTION, IDENTIFYING THE TYPE, DURATION, AND FREQUENCY OF CONSTRUCTION ACTIVITIES. NOTIFICATION MATERIALS WILL ALSO IDENTIFY A MECHANISM FOR RESIDENTS TO CONTACT REGARDING CONSTRUCTION NOISE. POST CONTACT INFORMATION IN THE CONSPICUOUS LOCATIONS ADJACENT TO THE SITE WITH CONTACT INFORMATION REGARDING CONSTRUCTION NOISE AND ACTIVITIES. THE NOTIFICATION WILL INCLUDE ANTICIPATED DATES AND HOURS DURING WICH CONSTRUCTION ACTIVITIES ARE ANTICIPATED TO OCCUR AND CONTACT INFORMATION, INCLUDING A DAYTIME TELEPHONE NUMBER, FOR THE PROJECT REPRESENTATIVE TO BE CONTACTED IN THE EVENT THAT NOISE LEVELS ARE DEEMED EXCESSIVE. RECOMMENDATIONS TO ASSIST NOISE-SENSITIVE LAND USES IN REDUCING INTERIOR NOISE LEVELS (E.G., CLOSING WINDOWS AND DOORS) WILL BE INCLUDED IN THE NOTIFICATION. IF THERE IS COMMUNICATION-RELATED TO CONSTRUCTION NOISE, IMPLEMENT FEASIBLE METHODS TO REDUCE NOISE EXPOSURE EFFECTS, SUCH AS SHIELDING, CHANGING THE LOCATION OF STATIONARY SOURCES, AND CHANGING CONSTRUCTION HOURS.
2. PROHIBIT THE START-UP OF MACHINES OR EQUIPMENT BEFORE PLACE BETWEEN THE HOURS OF 8:00 P.M. AND 6:00 A.M. ON WEEKDAYS AND FRIDAY COMMENCING AT 8:00 P.M. THROUGH AND INCLUDING 7:00 A.M. ON SATURDAY; SATURDAYS COMMENCING AT 8:00 P.M. THROUGH AND INCLUDING 7:00 A.M. ON THE NEXT FOLLOWING SUNDAY AND ON EACH SUNDAY AFTER THE HOUR OF 8:00 P.M.
3. PROHIBIT USE OF MATERIALS AND EQUIPMENT DELIVERIES BEFORE 7:00 A.M. AND AFTER 7:00 P.M., MONDAY THROUGH SATURDAY AND BEFORE 9:00 A.M. AND PAST 5:00 P.M. ON SUNDAY.
4. RESTRICT THE USE OF BELLS, WHISTLES, ALARMS, AND HORNS TO SAFETY-WARNING PURPOSES.
5. EQUIP ALL CONSTRUCTION EQUIPMENT WITH NOISE-REDUCTION DEVICES, SUCH AS MUFFLERS TO MINIMIZE CONSTRUCTION NOISE D OPERATE ALL INTERNAL COMBUSTION ENGINES WITH EXHAUST AND INTAKE SILENCERS.
6. LOCATE FIXED CONSTRUCTION EQUIPMENT (E.G., COMPRESSORS AND GENERATORS), CONSTRUCTION STAGING AND STOCKPILING AREAS, AND CONSTRUCTION VEHICLE ROUTES AS FAR AS FEASIBLE FROM NOISE-SENSITIVE RECEPTORS, THE NORTHERN PORTION OF THE SITE, AND/OR OFF-SITE STAGING AREAS NORTH OF THE SITE.

MITIGATION MEASURE C: CONDUCT BOTANICAL SURVEYS FOR SANFORD'S ARROWHEAD; AVOID PLACING PEDESTRIAN BRIDGES OVER SANFORD'S ARROWHEAD POPULATIONS

RETAIN A QUALIFIED BOTANIST TO CONDUCT A SURVEY TO MAP THE EXTENT OF SANFORD'S ARROWHEAD IN THE PROJECT AREA DURING ITS BLOOM PERIOD (I.E., MAY THROUGH OCTOBER) AT LEAST 1 YEAR PRIOR TO THE INITIATION OF CONSTRUCTION. FINAL DESIGN OF PEDESTRIAN BRIDGES OVER SIERRA CREEK WOULD BE LOCATED TO AVOID DISTURBANCE TO OR SHADING OF THESE POPULATIONS OF SANFORD'S ARROWHEAD.

MITIGATION MEASURE D: AVOID IMPACTS ON WESTERN POND TURTLE DURING CONSTRUCTION

IMPLEMENT THE MEASURES LISTED BELOW TO AVOID IMPACTS ON WESTERN POND TURTLE DURING PROJECT CONSTRUCTION:

1. WHERE FEASIBLE, CONSTRUCTION ACTIVITIES INVOLVING CONSTRUCTION WITH HEAVY EQUIPMENT (E.G., EXCAVATION, GRADING, CONTOURING) WITHIN SUITABLE WESTERN POND TURTLE UPLAND HABITAT (I.E., ANY UNDEVELOPED AREAS WITHIN 1,300 FEET OF SIERRA CREEK) WOULD AVOID THE WESTERN POND TURTLE NESTING PERIOD (GENERALLY MID-MAY TO EARLY JULY).
2. IF GROUND-DISTURBING ACTIVITIES OCCUR DURING THE NESTING SEASON, THE DISTRICT WOULD RETAIN A QUALIFIED BIOLOGIST PRIOR TO THE START OF CONSTRUCTION TO CONDUCT PRE-CONSTRUCTION SURVEYS AND MONITOR CONSTRUCTION, IF NEEDED. PRECONSTRUCTION SURVEYS WOULD BE CONDUCTED WITHIN SUITABLE WESTERN POND TURTLE AQUATIC AND UPLAND HABITAT 1 WEEK BEFORE AND WITHIN 24 HOURS OF BEGINNING WORK WITHIN SUITABLE WESTERN POND TURTLE UPLAND HABITAT (I.E., ANY UNDEVELOPED AREAS WITHIN 1,300 FEET OF SIERRA CREEK).

THE SURVEYS WOULD BE TIMED TO COINCIDE WITH THE TIME OF DAY WHEN TURTLES ARE MOST LIKELY TO BE ACTIVE (THE COOLER PART OF THE DAY BETWEEN 8:00 A.M. AND 12:00 P.M. DURING SPRING AND SUMMER). PRIOR TO CONDUCTING THE SURVEYS, THE BIOLOGIST WOULD LOCATE THE MICROHABITATS FOR TURTLE BASKING (FLOATING VEGETATION MATS) AND DETERMINE A LOCATION TO QUIETLY OBSERVE TURTLES. EACH SURVEY WOULD INCLUDE A 30-MINUTE WAIT TIME AFTER ARRIVING ON THE SITE TO ALLOW STARTLED TURTLES TO RETURN TO OPEN BASKING AREAS. THE SURVEY WOULD CONSIST OF A MINIMUM 15-MINUTE OBSERVATION TIME PER AREA WHERE TURTLES COULD BE OBSERVED. IF WESTERN POND TURTLES ARE OBSERVED DURING EITHER SURVEY, THE DISTRICT WOULD CONSULT WITH CDFW TO DETERMINE THE BEST COURSE OF ACTION TO AVOID HARM AND HARASSMENT OF INDIVIDUALS.

MITIGATION MEASURE E: CONDUCT A PRECONSTRUCTION SURVEY FOR NESTING BIRDS AND RAPTORS, AND IMPLEMENT AVOIDANCE MEASURES, AS NEEDED

IF PROJECT IMPLEMENTATION IS TO OCCUR DURING THE BIRD BREEDING SEASON (FEBRUARY 1 THROUGH AUGUST 31), THE DISTRICT WOULD RETAIN A QUALIFIED BIOLOGIST TO CONDUCT PRECONSTRUCTION SURVEYS NO MORE THAN 7 DAYS PRIOR TO THE START OF PROJECT CONSTRUCTION. THE SURVEY WOULD DETERMINE IF ACTIVE NEST SITES FOR ANY AVIAN SPECIES PROTECTED UNDER THE FEDERAL MBTA OCCUR WITHIN ALL PROJECT WORK AREAS AND A 300-FOOT BUFFER. IF WORK IS CONDUCTED OUTSIDE OF THIS TIMEFRAME, THEN NO PRECONSTRUCTION SURVEYS ARE NECESSARY. IF AN ACTIVE NEST (DEFIED AS A BIRD BUILDING A NEST, SITTING ON A NEST, CARRYING FOOD TO YOUNG, ETC.) IS FOUND, THEN A 100-FOOT BUFFER WOULD BE ESTABLISHED. AT THE DISCRETION OF THE QUALIFIED BIOLOGIST, THE BUFFER FOR CERTAIN SPECIES MAY BE REDUCED TO PERMIT PROJECT IMPLEMENTATION TO OCCUR (DEPENDING ON THE DURATION, INTENSITY, AND TYPE OF WORK THAT IS NECESSARY). THE BIOLOGIST WOULD MONITOR AS NEEDED TO ENSURE THAT NO HARASSMENT OR POTENTIAL TAKE OCCURS. THE BIOLOGIST WOULD HAVE THE AUTHORITY TO STOP WORK IF THEY DETERMINE THAT THE ACTIVITY MAY RESULT IN HARASSMENT, THROUGH THE BIRD FLUSHING OFF THE NEST OR PREVENTING ADULT BIRDS FROM CARRYING FOOD TO THE NEST, OR OTHERWISE JEOPARDIZE THE SURVIVAL OF THE NEST CONTENTS (EGGS, YOUNG, FLEDGLINGS, ETC.).

MITIGATION MEASURE F: COMPLY WITH THE SECTION 1600 STREAMBED ALTERATION AGREEMENT

BEFORE CONSTRUCTION, OBTAIN A SECTION 1600 STREAMBED ALTERATION AGREEMENT FROM CDFW FOR ANY ACTIVITIES PROPOSED IN OR NEAR THE SIERRA CREEK DRAINAGE THAT WOULD POTENTIALLY ALTER THE BANKS OF SIERRA CREEK AND IMPLEMENT ALL CONDITIONS IN THE PERMIT.

MITIGATION MEASURE G: SUBMIT A TREE PERMIT APPLICATION WITH THE COUNTY OF SACRAMENTO DEPARTMENT OF PUBLIC WORKS

BEFORE CONSTRUCTION, SUBMIT A TREE PERMIT APPLICATION TO THE COUNTY OF SACRAMENTO DEPARTMENT OF PUBLIC WORKS ACCOMPANIED BY THE APPLICATION FEE ESTABLISHED BY THE BOARD OF SUPERVISORS, IN ACCORDANCE WITH SECTION 19.12.180 OF COUNTY CODE. A COPY OF THIS REPORT AND THE FINAL PROJECT SITE PLAN SHOULD ACCOMPANY THE APPLICATION. ONCE REVIEWED BY THE COUNTY, FINAL DETERMINATION OF TREE REPLACEMENT REQUIREMENTS WILL BE PROVIDED.

MITIGATION MEASURE H: PALEONTOLOGICAL RESOURCES UNANTICIPATED DISCOVERY

PRIOR TO THE START OF EARTHMOVING ACTIVITIES AT THE PROJECT SITE, INFORM ALL CONSTRUCTION PERSONNEL INVOLVED WITH EARTHMOVING ACTIVITIES REGARDING THE POSSIBILITY OF ENCOUNTERING FOSSILS, THE APPEARANCE AND TYPES OF FOSSILS LIKELY TO BE SEEN DURING CONSTRUCTION, AND PROPER NOTIFICATION PROCEDURES SHOULD FOSSILS BE ENCOUNTERED. THIS WORKER TRAINING MAY EITHER BE PREPARED AND PRESENTED BY AN EXPERIENCED FIELD ARCHAEOLOGIST AT THE SAME TIME AS CONSTRUCTION WORKER EDUCATION ON CULTURAL RESOURCES OR PREPARED AND PRESENTED SEPARATELY BY A QUALIFIED PALEONTOLOGIST.

IF PALEONTOLOGICAL RESOURCES ARE DISCOVERED DURING EARTHMOVING ACTIVITIES, IMMEDIATELY CEASE WORK IN THE VICINITY OF THE FIND AND NOTIFY THE COUNTY. THE SACRAMENTO COUNTY OFFICE OF PLANNING AND ENVIRONMENTAL REVIEW WILL ALSO BE NOTIFIED. NHRPD WILL RETAIN A QUALIFIED PALEONTOLOGIST TO EVALUATE THE RESOURCE AND PREPARE A RECOVERY PLAN BASED ON SOCIETY OF VERTEBRATE PALEONTOLOGY (SVP) GUIDELINES (SVP 1996). THE RECOVERY PLAN MAY INCLUDE, BUT IS LIMITED TO, A FIELD SURVEY, CONSTRUCTION MONITORING, SAMPLING AND DATA RECOVERY PROCEDURES, MUSEUM CURATION AND FOR ANY SPECIMEN RECOVERED, AND A REPORT OF FINDINGS. RECOMMENDATIONS IN THE RECOVERY PLAN THAT ARE DETERMINED BY NHRPD, AS THE CEQA LEAD AGENCY, TO BE NECESSARY AND FEASIBLE WILL BE IMPLEMENTED BEFORE CONSTRUCTION ACTIVITIES CAN RESUME AT THE SITE WHERE THE PALEONTOLOGICAL RESOURCES WERE DISCOVERED.

MITIGATION MEASURE I: CULTURAL RESOURCES UNANTICIPATED DISCOVERY

IF HUMAN REMAINS ARE DISCOVERED DURING ANY GROUND DISTURBING/CONSTRUCTION ACTIVITIES DURING PROJECT IMPLEMENTATION, WORK WILL BE HALTED AND THE COUNTY CORONER CONTACTED. FOR ALL OTHER UNEXPECTED CULTURAL RESOURCES DISCOVERED DURING PROJECT CONSTRUCTION, WORK WILL BE HALTED UNTIL A QUALIFIED ARCHAEOLOGIST MAY EVALUATE THE RESOURCE ENCOUNTERED.

1. PURSUANT TO SECTIONS 5097.97 AND 5097.98 OF THE STATE HEALTH AND SAFETY CODE, IF A HUMAN BONE OR BONE OF UNKNOWN ORIGIN IS FOUND DURING CONSTRUCTION, ALL WORK IS TO STOP AND THE COUNTY CORONER AND THE OFFICE OF PLANNING AND ENVIRONMENTAL REVIEW WILL BE IMMEDIATELY NOTIFIED. ID THE REMAINS ARE DETERMINED TO BE NATIVE AMERICAN, THE CORONER WILL NOTIFY THE NATIVE AMERICAN HERITAGE COMMISSION (NAHC) WITHIN 24 HOURS, AND THE NAHC WILL IDENTIFY THE PERSON OR PERSONS IT BELIEVES TO BE THE MOST LIKELY DESCENDENT (MLD) FROM THE DECEASED NATIVE AMERICAN. THE MOST LIKELY DESCENDENT MAY MAKE RECOMMENDATIONS TO THE LANDOWNER OR THE PERSON RESPONSIBLE FOR THE EXCAVATION WORK, FOR MEANS OF TREATING OR DISPOSITION OF, WITH APPROPRIATE DIGNITY, THE HUMAN REMAINS AND ANY ASSOCIATED GRAVE GOODS.
2. IN THE EVENT OF AN INADVERTENT DISCOVERY OF CULTURAL RESOURCES (EXCLUDING HUMAN REMAINS) DURING CONSTRUCTION, ALL WORK MUST HALT WITHIN A 150-FOOT RADIUS OF THE DISCOVERY. A QUALIFIED PROFESSIONAL ARCHAEOLOGIST, MEETING THE SECRETARY OF THE INTERIOR'S PROFESSIONAL QUALIFICATION STANDARDS FOR PREHISTORIC AND HISTORIC ARCHAEOLOGY, WILL BE RETAINED AT THE APPLICANT'S EXPENSE TO EVALUATE THE SIGNIFICANCE OF THE FIND. IF IT IS DETERMINED DUE TO THE TYPES OF DEPOSITS DISCOVERED THAT A NATIVE AMERICAN MONITOR IS REQUIRED, THE GUIDELINES FOR MONITORS/CONSULTANTS OF NATIVE AMERICAN CULTURAL, RELIGIOUS, AND BURIAL SITES AS ESTABLISHED BY THE NATIVE AMERICAN HERITAGE COMMISSION WILL BE FOLLOWED, AND THE MONITOR WILL BE RETAINED AT THE APPLICANT'S EXPENSE.

   A. WORK CANNOT CONTINUE WITHIN THE 150-FOOT RADIUS OF THE DISCOVERY SITE UNTIL THE ARCHAEOLOGIST AND/OR TRIBAL MONITOR CONDUCTS SUFFICIENT RESEARCH AND DTA COLLECTION TO MAKE A DETERMINATION THAT THE RESOURCE IS EITHER 1) NOT CULTURAL IN ORIGIN; OR 2) NOT POTENTIALLY ELIGIBLE FOR LISTING ON THE NATIONAL REGISTER OF HISTORIC PLACES OR CALIFORNIA REGISTER OF HISTORICAL RESOURCES.

   B. IF A POTENTIALLY-ELIGIBLE RESOURCE IS ENCOUNTERED, THEN THE ARCHAEOLOGIST AND/OR TRIBAL MONITOR, THE PLANNING AND ENVIRONMENTAL REVIEW DIVISION STAFF, AND THE PROJECT PROPONENT WILL ARRANGE FOR EITHER 1)TOT AVOIDANCE OF THE RESOURCE, IF POSSIBLE; OR 2) TEST EXCAVATIONS OR TOTAL DATA RECOVERY AS MITIGATION. THE DETERMINATION WILL BE FORMALLY DOCUMENTED IN WRITING AND SUBMITTED TO THE COUNTY ENVIRONMENTAL COORDINATOR AS VERIFICATION THAT THE PROVISIONS OF CEQA FOR MANAGING UNANTICIPATED DISCOVERIES HAVE BEEN MET.

Westwood
Westwood Professional Services, Inc.
6200 STONERIDGE MALL ROAD, STE 330
PLEASANTON, CA 94588
T:925.223.8340
westwoodps.com

NO.	DESCRIPTION	DATE	BY	APP. DATE	APP.

7781 WATT AVENUE - SIERRA CREEK COMMUNITY PARK

IMPROVEMENT PLANS

NOTES

DATE: 9-1-2026
DRAFTER: JPJ
DESIGNER: CZW
CHECKED: RIC
PROJECT NO. 41541

REGISTERED PROFESSIONAL ENGINEER ROBERT I. FRIEDMAN 59425 CIVIL STATE OF CALIFORNIA

SACRAMENTO COUNTY, CA

Last Saved by: Czwennich
Last Saved: 9/1/2026 10:00 AM
Plot Date/Time: 9/1/2026 10:01 AM
Drawing: N:_ODE\Pleasanton\41541 NRHPD Sierra Creek Park\Civil\ConceptPlans\IP02

CURVE TABLE			
CURVE	RADIUS	DELTA	LENGTH
C1	100.00	18°11'42"	31.76'
C2	100.00	18°11'41"	31.76'

PAVEMENT MARKING DETAILS

MUTCD TYPE XI U-TURN ARROW

4" SOLID WHITE LINE

12" THICK WHITE LINE

LEGEND

1. INSTALL NEW CONCRETE MEDIAN. CONFORM TO EX MEDIAN CURB HEIGHT & GRADE. SAWCUT EX PAVEMENT & DEMO EX PAVEMENT AS NECESSARY.
2. DEMO EX MEDIAN CURB
3. EXISTING MONUMENT. THE CONTRATOR SHALL BE RESPONSIBLE FOR THE PROTECTION OF ALL EXISTING SURVEY MONUMENTS OR MARKERS. MONUMENTS OR MARKERS DESTROYED DURING CONSTRUCTION SHALL BE REPLACED AT THE CONTRACTOR'S EXPENSE
4. SEE SHEET L1.0 FOR IRRIGATION SLEEVING AND ROUTING

REMOVE EX PAVEMENT & FILL BETWEEN CURB WITH 6"± P.C.C.

DEMO EX MEDIAN & INSTALL NEW AC/AG PAVEMENT

N

0 15 30 60 90

GRAPHIC SCALE IN FEET
1"=30'

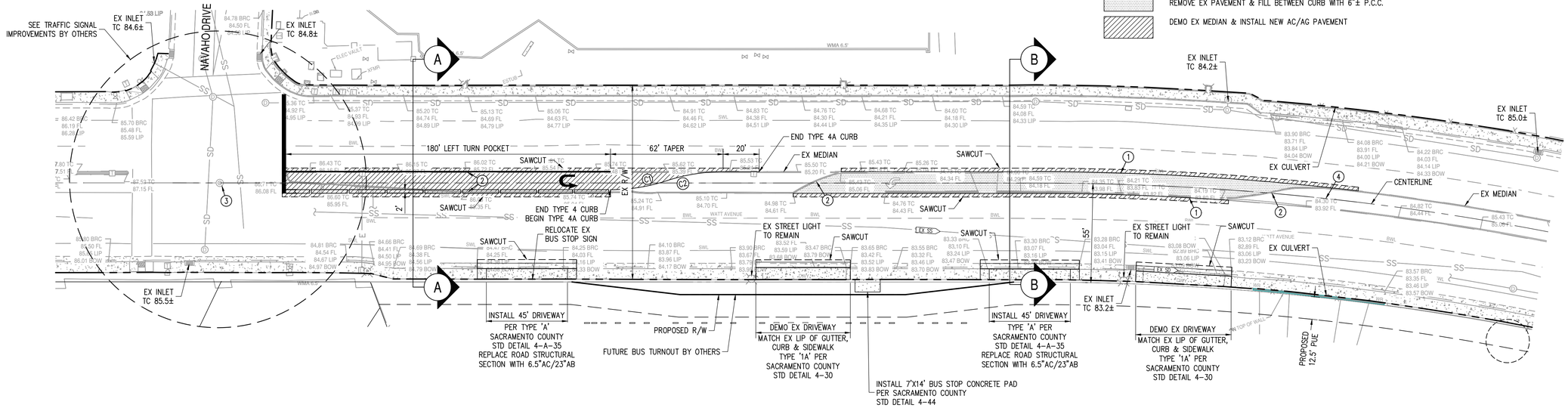

WATT AVENUE

SCALE: 1" = 30'

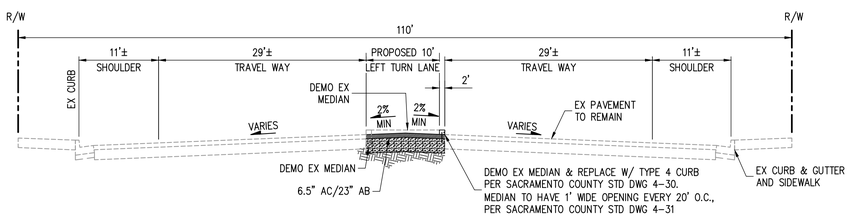

NOTE: REFER TO SACRAMENTO COUNTY STD DWG 4-42 FOR PAVEMENT WIDENING DETAILS

SECTION A-A

NOT TO SCALE

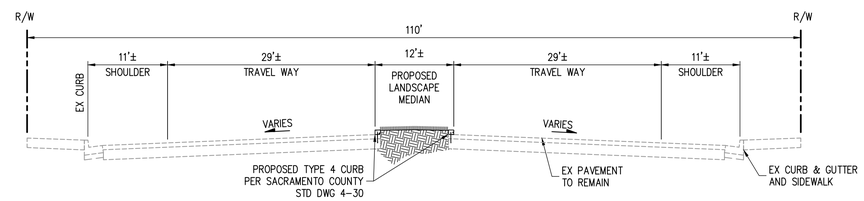

SECTION B-B

NOT TO SCALE

NOTE:

- CONTRACTOR TO DEMO ANY PROJECT FRONTAGE SIDEWALK THAT IS NOT ADA COMPLIANT. ADA COMPLIANT MEANS THAT THE SIDEWALK IS FIRM, STABLE AND SLIP RESISTANT, NO ABRUPT CHANGES IN LEVEL, 5% MAX RUNNING SLOPE AND 2% MAX CROSS SLOPE.
- CONTRACTOR TO ADJUST WET UTILITY BOXES AND VALVES TO GRADE AS NEEDED TO CONFORM TO THE MEDIAN MODIFICATIONS.

Westwood
Westwood Professional Services, Inc.
6200 STONERIDGE MALL ROAD, STE 330
PLEASANTON, CA 94588
T:925.223.8340
westwoodps.com

NO.	DESCRIPTION	DATE	BY	APP. DATE	APP.

7781 WATT AVENUE - SIERRA CREEK COMMUNITY PARK

IMPROVEMENT PLANS
IMPROVEMENT PLAN

DATE: 9-1-2026

DRAFTER: JPJ

DESIGNER: CZW

CHECKED: RIC

PROJECT NO. 41541

REGISTERED PROFESSIONAL ENGINEER ROBERT I CHAN 59425 CIVIL STATE OF CALIFORNIA

4

SHEET 4 OF 13

SACRAMENTO COUNTY, CA

Last Saved by: Czwenrich
Last Saved: 8/28/2026 10:38 AM
Plot Date/Time: 8/28/2026 10:39 AM
Drawing: N:_OE\Pleasanton\41541 NRHPD Sierra Creek Park\Civil\Const\Plans\IP03

1. SEE SECTION 27-3.01 OF STANDARD CONSTRUCTION SPECIFICATIONS FOR REQUIREMENT FOR EXPANSION JOINTS, WEAKENED PLANE JOINTS AND SCORE MARKS. 1/2" RADIUS ON EXPOSED EDGES UNLESS NOTED OTHERWISE.

2. SEE DRAWING 4-31 FOR ADDITIONAL MEDIAN CURB DETAILS.

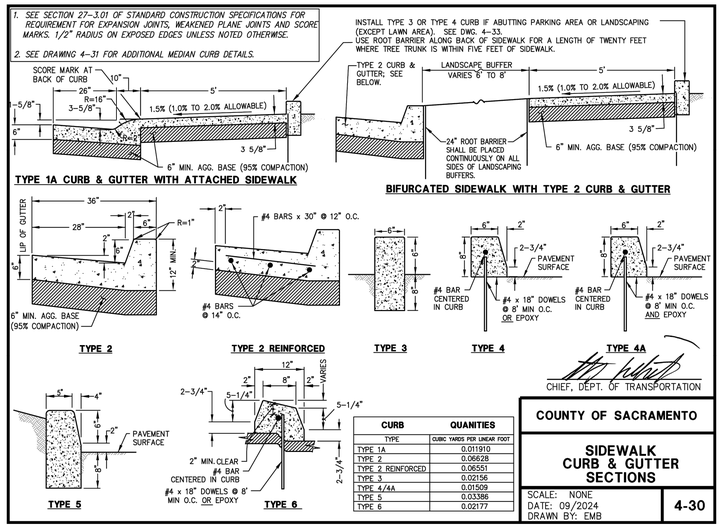

CURB QUANITIES	
TYPE	CUBIC YARDS PER LINEAR FOOT
TYPE 1A	0.011910
TYPE 2	0.06628
TYPE 2 REINFORCED	0.06551
TYPE 3	0.02156
TYPE 4/4A	0.01509
TYPE 5	0.03386
TYPE 6	0.02177

CHIEF, DEPT. OF TRANSPORTATION

COUNTY OF SACRAMENTO

SIDEWALK CURB & GUTTER SECTIONS

SCALE: NONE
DATE: 09/2024
DRAWN BY: EMB

4-30

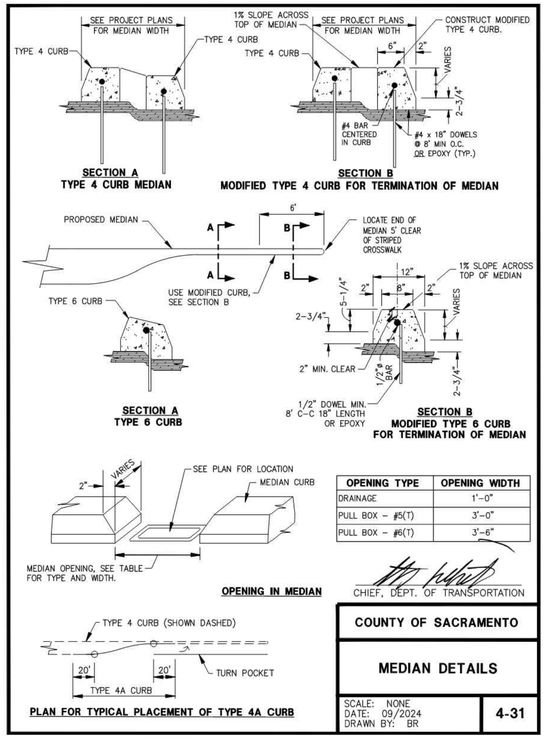

OPENING TYPE	OPENING WIDTH
DRAINAGE	1'-0"
PULL BOX - #5(T)	3'-0"
PULL BOX - #6(T)	3'-6"

CHIEF, DEPT. OF TRANSPORTATION

COUNTY OF SACRAMENTO

MEDIAN DETAILS

SCALE: NONE
DATE: 09/2024
DRAWN BY: BR

4-31

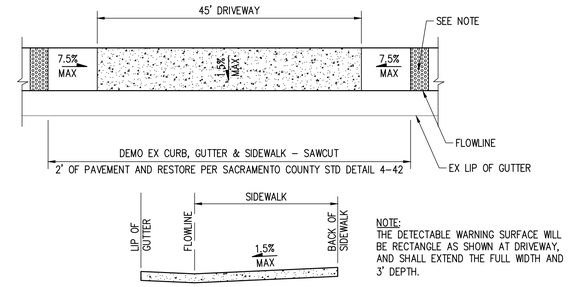

NOTE:
THE DETECTABLE WARNING SURFACE WILL BE RECTANGLE AS SHOWN AT DRIVEWAY, AND SHALL EXTEND THE FULL WIDTH AND 3' DEPTH.

DRIVEWAY

NOT TO SCALE

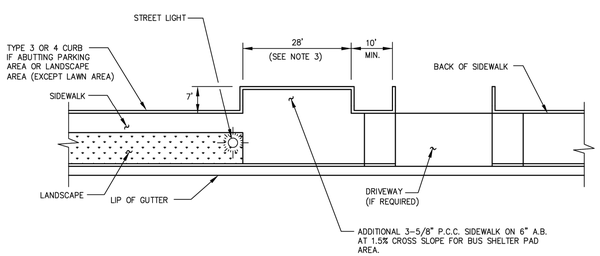

NOTES:

1. FOR BUS STOPS WITHOUT TURNOUTS, TYPE 2 REINFORCED CURB & GUTTER SECTION SHALL BE USED FOR 100' EACH SIDE OF BUS STOP SIGN.
2. SEE STANDARD DRAWING 4-43 FOR APPLICATIONS OF TYPE 2 REINFORCED CURB & GUTTER AT BUS STOP TURNOUTS.
3. PAD LENGTH MAY BE 14' AT MINOR STREET INTERSECTIONS & MID BLOCK LOCATIONS.

CHIEF, DEPT. OF TRANSPORTATION

COUNTY OF SACRAMENTO

BUS STOP DETAILS

SCALE: NONE
DATE: 09/2024
DRAWN BY: TRU P.

4-44

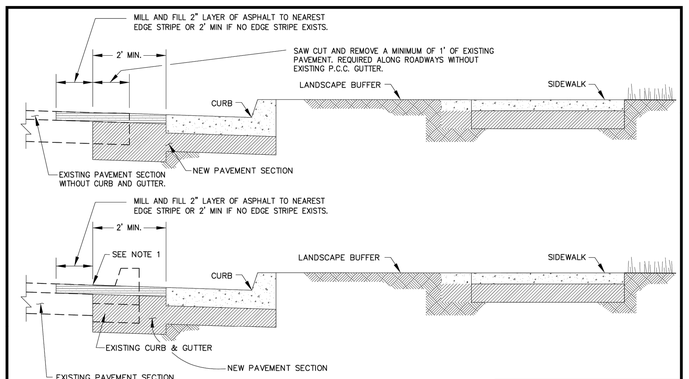

NOTE:

1. SAW CUT AT EDGE OF PAVEMENT PRIOR TO REMOVAL OF EXISTING GUTTER. IF CONDITION OF EXISTING PAVEMENT AT EXISTING LIP OF GUTTER IS UNACCEPTABLE FOR PAVEMENT WIDENING, SAW CUT AND REMOVE ADDITIONAL PAVEMENT WIDTH AS DIRECTED BY THE ENGINEER.

CHIEF, DEPT. OF TRANSPORTATION

COUNTY OF SACRAMENTO

PCC CURB & GUTTER PAVEMENT WIDENING DETAIL

SCALE: NONE
DATE: 09/2024
DRAWN BY: TRS

4-42

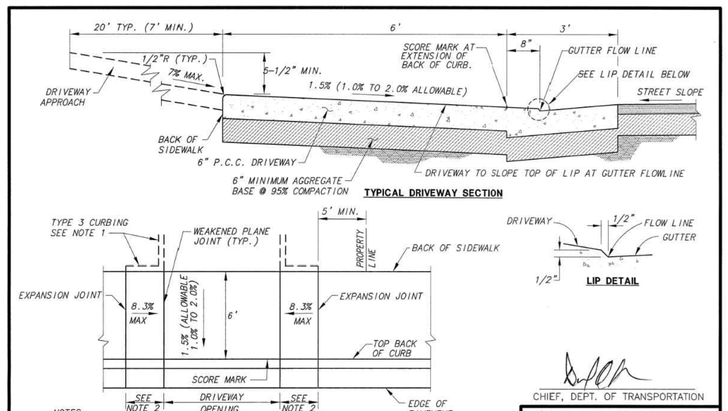

NOTES:

1. TYPE 3 CURBING ON SITE SHALL EXTEND TO WHERE THE DRIVEWAY APPROACH IS A MINIMUM OF FOUR INCHES ABOVE THE BACK OF SIDEWALK ELEVATION AT THE DRIVEWAY.
2. SEE DRAWING 4-51 FOR APPROX. LENGTH OF INCLINED PORTION OF DRIVEWAY.

USE OF THIS DRAWING IS RESTRICTED TO LOCATIONS APPROVED TO BE BUILT WITH ATTACHED SIDEWALK. ATTACHED SIDEWALK MAY ONLY BE USED ON MINOR RESIDENTIAL AND PRIMARY RESIDENTIAL STREETS, OR ALONG INFILL PROJECTS WITH WRITTEN APPROVAL OF THE DIRECTOR OF COUNTY ENGINEERING OR THE DIRECTOR OF TRANSPORTATION.

CHIEF, DEPT. OF TRANSPORTATION

COUNTY OF SACRAMENTO MUNICIPAL SERVICES AGENCY

TYPE A DRIVEWAY

SCALE: NONE
DATE: 07/21/2009
DRAWN BY: B.R.

4-A-35

Westwood
Westwood Professional Services, Inc.
6200 STONERIDGE MALL ROAD, STE 330
PLEASANTON, CA 94588
T:925.223.8340

NO.	DESCRIPTION	DATE	BY	APP. DATE	APP.

7781 WATT AVENUE - SIERRA CREEK COMMUNITY PARK

IMPROVEMENT PLANS

DETAILS

DATE: 9-1-2026
DRAFTER: JPJ
DESIGNER: CZW
CHECKED: RIC
PROJECT NO. 41541

REGISTERED PROFESSIONAL ENGINEER ROBERT I CHEW 59425 CIVIL STATE OF CALIFORNIA

5
SHEET 5 OF 13

SACRAMENTO COUNTY, CA

Last Saved by: Czwenrich
Last Saved: 5/6/2026 12:17 PM
Plot Date/Time: 5/6/2026 10:00 AM
Drawing: N:_CQE\Pleasanton\41541 NRI\PD Sierra Creek Park\Civil\ConstPlans\IP04

EROSION CONTROL NOTES:

1. ALL EROSION AND SEDIMENT CONTROL MEASURES SHALL BE CONSTRUCTED AND MAINTAINED IN ACCORDANCE WITH THE CURRENT MEASURES SHALL BE CONSTRUCTED AND MAINTAINED IN ACCORDANCE WITH THE CURRENT EDITION OF THE COUNTY OF SACRAMENTO IMPROVEMENT STANDARDS.
2. EROSION CONTROL BMPs SHALL BE INSTALLED AND MAINTAINED DURING THE WET SEASON (OCTOBER 1 THROUGH APRIL 30). SEDIMENT CONTROL BMPs SHALL BE INSTALLED AND MAINTAINED YEAR-ROUND.
3. ALL DRAINAGE INLETS IMMEDIATELY DOWNSTREAM OF THE WORK AREAS AND WITHIN THE WORK AREAS SHALL BE PROTECTED WITH SEDIMENT CONTROL YEAR-ROUND. SEDIMENT CONTROL PROTECTION SHALL BE REMOVED FROM THE DRAINAGE INLETS UPON THE COUNTY'S ACCEPTANCE OF PUBLIC IMPROVEMENTS.
4. ALL STABILIZED CONSTRUCTION ACCESS LOCATIONS SHALL BE CONSTRUCTED PER STANDARD DRAWING 11-1 WHERE CONSTRUCTION TRAFFIC ENTERS OR LEAVES PAVED AREAS. THE STABILIZED ACCESS SHALL BE MAINTAINED YEAR-ROUND UNTIL THE COMPLETION OF CONSTRUCTION.
5. ALL AREAS DISTURBED DURING CONSTRUCTION BY GRADING, TRENCHING, OR OTHER ACTIVES, SHALL BE PROTECTED FROM EROSION DURING THE WET SEASON (OCTOBER 1 THROUGH APRIL 30). HYDROSEED, IF UTILIZED, MUST BE PLACED BY SEPTEMBER 15. HYDROSEED PLACED DURING THE WET SEASON SHALL USE A SECONDARY EROSION PROTECTION METHOD.
6. SENSITIVE AREAS AND AREAS WHERE EXISTING VEGETATION BEING PRESERVED SHALL BE PRESERVED SHALL BE PROTECTED WITH CONSTRUCTION FENCING. SEDIMENT CONTROL BMPs SHALL BE INSTALLED WHERE ACTIVE CONSTRUCTION AREAS DRAIN INTO SENSITIVE OR PRESERVED VEGETATION AREAS.
7. SEDIMENT CONTROL BMPs SHALL BE PLACED ALONG THE PROJECT PERIMETER WHERE DRAINAGE LEAVES THE PROJECT. SEDIMENT CONTROL BMPs SHALL BE MAINTAINED YEAR-ROUND UNTIL THE CONSTRUCTION IS COMPLETE OR THE DRAINAGE PATTERN HAS BEEN CHANGED AND NO LONGER LEAVES THE SITE.
8. EROSION AND SEDIMENT CONTROL MEASURES FOR THE PROJECT SHOULD ALWAYS BE IN SUBSTANTIAL COMPLIANCE WITH THE STORMWATER POLLUTION PREVENTION PLAN (SWPPP) PREPARED FOR THE PROJECT IN ACCORDANCE WITH THE STATE OF CALIFORNIA GENERAL CONSTRUCTION PERMIT. THIS PERMIT REQUIRES THAT THE SWPPP BE KEPT UP TO DATE TO REFLECT THE CHANGING SITE CONDITIONS AND THAT THE SWPPP BE ALWAYS AVAILABLE ON-SITE FOR REVIEW BY STATE INSPECTORS.
9. EFFECTIVE EROSION CONTROL BMPs SHALL BE IN PLACE BEFORE ANY STORM EVENTS.
10. EROSION AND SEDIMENT CONTROL MEASURES SHALL BE EFFECTIVE FOR THE DURATION OF THE CONSTRUCTION ACTIVITY.
11. NO STORM RUNOFF WATER SHALL BE ALLOWED TO DRAIN DIRECTLY INTO THE EXISTING UNDERGROUND STORM SYSTEM BEFORE THE ONSITE STORM DRAIN SYSTEM IS INSTALLED.
12. AS SOON AS IS PRACTICAL AFTER THE NEW ONSITE STORM SYSTEM IS INSTALLED, THE CATCH BASINS SHALL BE INSTALLED AND DRAIN INLET PROTECTION BMPS SHALL BE INSTALLED.
13. SHOULD THE PROPOSED ONSITE STORM SYSTEM NOT BE INSTALLED BY OCTOBER 1ST, TEMPORARY SEDIMENT BASINS SHALL BE CONSTRUCTED AROUND THE OPENINGS OF ANY EXISTING STORM PIPES THAT DRAIN THE SITE, PER CASQA BMPS AND STANDARDS OR PER A SPECIAL DETAIL SHOWN ON THE PLAN.
14. THE NAME, ADDRESS AND 24-HOUR TELEPHONE NUMBER OF THE PERSON RESPONSIBLE FOR IMPLEMENTATION OF THE EROSION AND SEDIMENTATION CONTROL PLAN SHALL BE PROVIDED TO THE CITY PRIOR TO BEGINNING CONSTRUCTION.
15. INSTALL AND MAINTAIN STABILIZED SITE EXITS SO THAT TRACK OUT DOES NOT OCCUR. THE SITE EXIT TRACK OUT CONTROLS MUST BE INSTALLED AND MAINTAINED PER THE CASQA STORMWATER BMP HANDBOOK TC-1 SPECIFICATION. PROPERLY GRADE THE ACCESS AREA TO PREVENT RUNOFF AND DESIGN IT TO SUPPORT THE HEAVIEST VEHICLES IN USE. OTHER MEASURES TO PREVENT TRACKING ONTO ROADWAYS MAY BE USED IF APPROVED BY THE CITY. THIS DOES NOT NEED TO BE DONE AT DRIVEWAYS, WHICH WILL BE CLOSED BY IMMOVABLE BARRICADES DURING CONSTRUCTION.
16. ALL EROSION AND SEDIMENTATION CONTROL MEASURES SHALL BE MAINTAINED UNTIL DISTURBED AREAS ARE STABILIZED. CHANGES TO THE ESCP SHALL BE MADE TO MEET FIELD CONDITIONS, BUT ONLY WITH THE APPROVAL OF OR AT THE DIRECTION OF THE CITY ENGINEER.
17. ALL SIDEWALK AND PAVED AREAS OUTSIDE OF THE CONSTRUCTION BOUNDARY SHALL BE KEPT CLEAR OF EARTH MATERIAL AND DEBRIS. THE CONSTRUCTION SITE SHALL BE MAINTAINED SO AS TO MINIMIZE SEDIMENT LADEN RUNOFF FROM ENTERING ANY STORM DRAINAGE SYSTEM.
18. THE EROSION AND SEDIMENTATION CONTROL PLAN COVERS ONLY THE FIRST WINTER DURING WHICH CONSTRUCTION IS TO TAKE PLACE. PLANS ARE TO BE RESUBMITTED PRIOR TO SEPTEMBER 1 OF EACH SUBSEQUENT YEAR UNTIL THE CITY ACCEPTS THE SITE IMPROVEMENTS.
19. IT IS THE RESPONSIBILITY OF THE CONTRACTOR TO INSPECT AND REPAIR ALL EROSION CONTROL FACILITIES AT THE END OF EACH WORK DAY DURING THE RAINY SEASON.
20. IT IS THE RESPONSIBILITY OF THE CONTRACTOR TO CLEAN OUT SEDIMENT BASINS WHENEVER THE LEVEL OF SEDIMENT REACHES L/2 OF THE DESIGN VOLUME.
21. IT IS THE RESPONSIBILITY OF THE CONTRACTOR TO PROTECT TEMPORARY BORROW AREAS AND/OR STOCKPILES AS SPECIFIED IN CASQA WM-3.
22. THE CLEANING OF PAVED STREETS, DURING AND AT THE COMPLETION OF CONSTRUCTION, SHALL BE PERFORMED WITH MECHANICAL SWEEPERS. THE USE OF HOSES OR WATER TRUCKS TO "WASH DOWN" THE STREET IS PROHIBITED UNLESS THE DRAINS HAVE BEEN PLUGGED AND THE WATER IS CAPTURED AND PROPER!Y DISPOSED.
23. THE ESCP AND/OR SWPPP, DETAILS, NOTES AND CALCULATIONS IF REQUIRED, MUST BE A PART OF THE PLAN CHECK SUBMITTAL PACKAGE FOR EITHER GRADING PERMIT ONLY OR FINAL SITE APPROVAL. THE DESIGN ENGINEER PRIOR TO PLAN PREPARATION SHOULD CONSULT THE CITY ENGINEER IF THE NEED FOR A SEPARATE PLAN IS IN DOUBT.

ADDITIONAL EROSION CONTROL NOTES:

1. THESE PLANS DEPICT APPROPRIATE MEASURES TO CONTROL EROSION ON THE SITE TO BE GRADED AS SHOWN ON THE PLANS ENTITLED, "IMPROVEMENT PLANS FOR WATT AVENUE APN 203-0310-045-0000 SIERRA CREEK COMMUNITY PARK".
2. A BUFFER ADJACENT TO THE EXISTING CREEK A MINIMUM OF 20 FEET WIDE DISALLOWING STOCKPILING OR STAGING.
3. A LOG OF CORRECTIVE CHANGES SHOULD BE INCLUDED AND MAINTAINED AT THE SITE.
4. A CONSTRUCTION ENTRANCE SHALL BE INSTALLED PRIOR TO COMMENCEMENT OF GRADING. THE LOCATION OF THE ENTRANCE IS SHOWN AND SHOULD BE ADJUSTED BASE ON THE ROUTE OF CONSTRUCTION TRAFFIC ENTERING THE SITE. ALL CONSTRUCTION TRAFFIC ENTERING THE PAVED ROAD MUST CROSS THE CONSTRUCTION ENTRANCE.
5. ALL GRADED SLOPES SHALL BE SPRAY WITH HYDROSEED MULCH, INSTALL STRAW WATTLES AT TOP AND TOE OF SLOPE WHERE SHOWN ON THE EROSION CONTROL PLAN.
6. WHEN TEMPORARY STRUCTURES HAVE SERVED THEIR INTENDED PURPOSE AND THE CONTRIBUTING DRAINAGE AREA HAS BEEN PROPERLY STABILIZED, THE EMBANKMENT AND RESULTING SEDIMENT DEPOSITS ARE TO BE LEVELED OR OTHERWISE DISPOSED OF BY THE CONTRACTOR AS RECOMMENDED BY THE GEOTECHNICAL ENGINEER.
7. GRADED AREAS MUST DRAIN AWAY FROM THE FACE OF SLOPES AT THE CONCLUSION OF EACH WORKING DAY.
8. HYDROSEEDED AREAS SHALL BE REPAIRED, RESEEDED, AND MULCHED AS SOON AS POSSIBLE AFTER ANY DAMAGE.
9. TEMPORARY HYDROSEEDING SPECIFICATIONS: - ALL TEMPORARY SLOPES WILL BE SEEDED AT THE RATES SPECIFIED BELOW.

ITEM	LB/ACRE
"BLANDO" BROME	30
ANNUAL RYEGRASS	20
BARLEY	150

10. THE INTERIM EROSION CONTROL MEASURES DURING NORMAL GRADING OPERATIONS SHALL CONSIST OF INSTALLING THE FOLLOWING MEASURES AT LOCATIONS SHOWN ON THE EROSION CONTROL PLAN:
    - CONSTRUCTION ENTRANCE PER DETAIL ON THIS SHEET
    - PERIMETER SILT FENCING OR STRAW WATTLE PER DETAIL ON THIS SHEET
    - HYDROSEEDING PER SPECIFICATIONS ON THIS SHEET
    - STORM DRAIN INLET PROTECTION
    - CONCRETE WASH AREA
    - CONSTRUCTION STAGING AREA.
14. ADDITIONAL MATERIALS FOR IMPLEMENTATION OF EROSION AND SEDIMENTATION CONTROL MEASURES SHALL BE STORED ON SITE.
15. ALL DISTURBED SOIL, INCLUDING FINISHED LOTS, TO BE PROTECTED WITH EROSION CONTROL (e.g. HYDROSEED, BONDED FIBRE MATRIX, ETC.) MEASURES IF INACTIVE FOR MORE THAN 14 DAYS.
16. HAZARDOUS MATERIALS TO BE PROPERLY STORED IN ELEVATED, COVERED, WATERTIGHT CONTAINERS.
17. CONTRACTOR TO GRADE SWALE IN THE STREET AND DIRECT THE SWALE TO THE LOW SPOT IN THE OUTFALL.
18. WHEN THE STORM DRAIN LINES ARE INSTALLED, CONTRACTOR IS TO PROVIDE INLET PROTECTION.

DUST CONRTOL:

1. DUST SHALL BE CONTROLLED PER SECTION 10 OF THE STATE OF CALIFORNIA, DEPARTMENT OF TRANSPORTATION STANDARD SPECIFICATIONS AND THE #### REQUIREMENTS.
2. ALL EXPOSED SURFACES SHALL BE WATERED A MINIMUM OF TWICE DAILY UNLESS DEEMED UNNECESSARY DUE TO WEATHER. WATER SHALL BE APPLIED AS PROVIDED IN SECTION 17 OF CALTRANS STANDARD SPECIFICATIONS.
3. DUST PALLIATIVES MAY BE SUBSTITUTED FOR WATERING UPON THE APPROVAL OF THE COUNTY ENGINEER. DUST PALLIATIVES SHALL BE APPLIED AS PROVIDED IN SECTION 18 OF CALTRANS STANDARD SPECIFICATIONS.
4. ALL TRUCKS CARRYING LOOSE MATERIALS SHALL BE COVERED WITH A TARPAULIN.

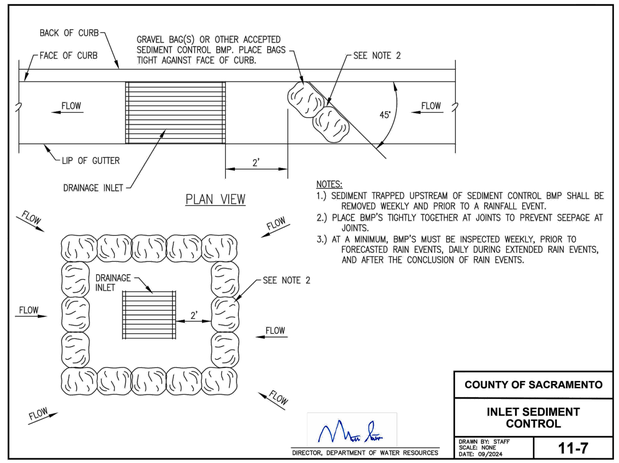

INLET PROTECTION DETAIL

NOT TO SCALE

BMP INSTALLATION SCHEDULE

PHASE OF CONSTRUCTION	EROSION & SEDIMENT CONTROL MEASURES															
	WET SEASON					WET AND DRY SEASON										
	HYDROSEEDING	STRAW MULCHES & TACIFIER	SOIL BINDERS	PRESERVATION OF EXISTING VEGETATION	BLANKETS, MATS & GEOTEXTILES	FIBER ROLLS	DUST CONTROL	OUTLET PROTECTION	SILT FENCING	SAND/GRAVEL BAD BARRIERS	STORM DRAIN INLET PROTECTION	SEDIMENT TRAP	DEWATERING	STABILIZED CONSTRUCTION ENTRANCE	MATERIAL WASTE DISPOSAL LOCATION	CONCRETE WASHOUT
PRE-GRADING				X		X	X			X	X	X		X	X	
CUT & FILL ACTIVITIES	X	X	X		X	X	X			X	X	X		X	X	
UNDERGROUND WORK						X	X			X	X	X		X	X	X
STORM DRAIN IMPROVEMENTS						X	X	X		X	X	X		X	X	X
CURB & GUTTER							X			X	X	X		X	X	X
STREET IMPROVEMENTS							X			X	X				X	X
PAVE OUT							X			X	X	X		X	X	X
POST GRADING	X		X			X	X			X	X	X		X	X	X

Westwood
Westwood Professional Services, Inc.
6200 STONERIDGE MALL ROAD, STE 330
PLEASANTON, CA 94588
T:925.223.8340
westwoodps.com

NO.	DESCRIPTION	DATE	BY	APP. DATE	APP.

7781 WATT AVENUE - SIERRA CREEK COMMUNITY PARK

IMPROVEMENT PLANS
EROSION CONTROL NOTES

DATE: 9-1-2026
DRAFTER: JPJ
DESIGNER: CZW
CHECKED: RIC
PROJECT NO. 41541

REGISTERED PROFESSIONAL ENGINEER ROBERT T CHEN 59425 CIVIL STATE OF CALIFORNIA

SACRAMENTO COUNTY, CA

Last Saved by: Czwerrich
Last Saved: 8/26/2026 10:56 AM
Plot Saved by: Czwerrich On: 8/26/2026 10:56 AM
Drawing: N:_ODE\Pleasanton\41541 NRHPD Sierra Creek Park\Civil\Const\Plans\IP05

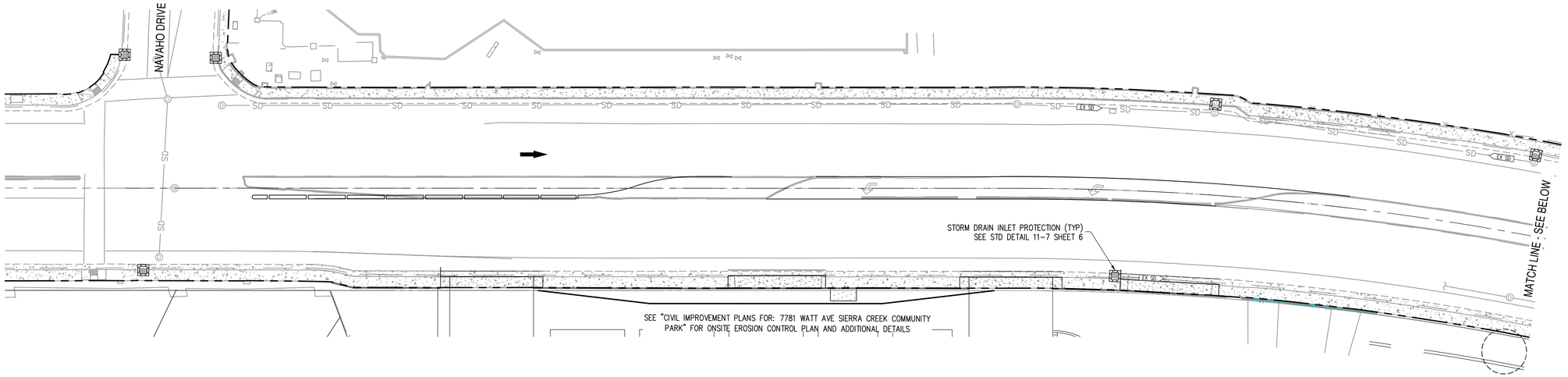

WATT AVENUE

SCALE: 1" = 30'

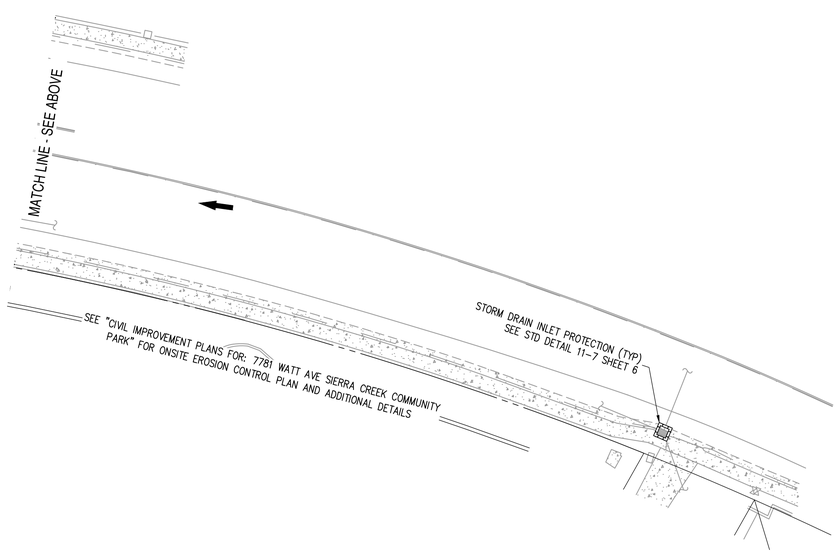

WATT AVENUE

SCALE: 1" = 30'

LEGEND

INLET SEDIMENT CONTROL PER STD DETAIL 11-7

PRE CONSTRUCTION FLOW DIRECTION

*6.79 TOTAL ACRES DISTURBED DURING CONSTRUCTION
- 0.99 ACRES PER "IMPROVEMENT PLANS FOR WATT AVENUE" PLANS (OFFSITE)
- 5.80 ACRES FOR "7781 WATT AVENUE SIERRA CREEK COMMUNITY PARK" PLANS (ONSITE)

WDID: 5S34C410556

ALL CONSTRUCTION ACTIVITIES HALL BE PERFORMED IN CONFORMANCE WITH STORM WATER POLLUTION PREVENTION PLAN (SWPPP) FOR THIS PROJECT AND AS REQUIRED BY THE STATE OF CALIFORNIA WATER RESOURCES CONTROL BOARD ORDER 2009-0009-DWQ AS AMENDED BY 2010-0014-DWQ AS AMENDED BY 2012-006-DWQ AND NPDES PERMIT NO. CAS 000002

STORM WATER POLLUTION PREVENTION PLAN (SWPP)	
NAME:	PHONE:

N

0 15 30 60 90

GRAPHIC SCALE IN FEET
1"=30'

Westwood
Westwood Professional Services, Inc.
6200 STONERIDGE MALL ROAD, STE 330
PLEASANTON, CA 94588
T:925.223.8340
westwoodps.com

NO.	DESCRIPTION	DATE	BY	APP. DATE	APP.

7781 WATT AVENUE - SIERRA CREEK COMMUNITY PARK

IMPROVEMENT PLANS
EROSION CONTROL PLAN

DATE: 9-1-2026

DRAFTER: JPJ

DESIGNER: CZW

CHECKED: RIC

PROJECT NO.
41541

REGISTERED PROFESSIONAL ENGINEER
ROBERT T CHEN
59425
CIVIL
STATE OF CALIFORNIA

7
SHEET 7 OF 13

SACRAMENTO COUNTY, CA

Last Saved by: Czwerlich
Last Saved: 8/26/2026 10:56 AM
Plot Saved by: CZWERLICH 8/26/2026 10:56 AM
Drawing: N:_ODE\Pleasanton\41541 NRHPD Sierra Creek Park\Civil\Const\Plans\IP05

EQUIPMENT SCHEDULE

LOC ID	STANDARD/EQUIPMENT TYPE	LUMINAIRE ARM	LUMINAIRE HGT	LUMINAIRE ARM	LUMINAIRE TYPE	VEH SIGNAL HEAD MOUNTING	VEH SIGNAL HEAD PHASE	VEH SIGNAL HEAD SEC.	PED SIG HEAD PHASE	PED SIG HEAD MOUNT'G	PED PUSH BUTTON PHASE	PED PUSH BUTTON QUAD.	PED PUSH BUTTON ARROW	STA	OFFSET	NOTES
A	29-5-100 (N)	45' (N)	30' (N)	15' (N)	LEOTEK LED 87W	SV-1-T(N) MAS(N) MAS(N) MAS(N)	2 2 2 5*	12" 12" 12" 12"	2	SP-1-T (N)				158+13.5	50.0'L	RELOCATE EXISTING VIDEO DETECTION CAMERA, OPTICAL DETECTOR, LUMINAIRE HEAD, AND SNS "NAVAHO DR" PER STD. 4-70E ON SMA. FURNISH AND INSTALL R73(SPECIAL) SIGN, SEE DETAIL ON THIS SHEET. FURNISH AND INSTALL SNS "NAVAHO DR" PER STD. 4-70C ON POLE.
B	1-B		7'						4	TP-1-T	4	EAST	LEFT			13
C	PPB POST		4'									SOUTH	LEFT			
D	15TS		30'	12'	LEOTEK LED 87W	SV-2-T	1 2	12" 12"	2	SP-1-T						
E	29-5-100	50'	30'	12'	LEOTEK LED 87W	MAT MAS SV-2-T	1 6 4 4	12" 12" 12" 12"								EXISTING VIDEO DETECTION CAMERA, OPTICAL DETECTOR AND SNS "NAVAHO DR" ON SMA.
F	17-2-100	20'	30'	12'	LEOTEK LED 87W	MAT SV-3-TB(N)	4 4 5* 6	12" 12" 12" 12"	4	SP-1-T	4	WEST	LEFT			EXISTING VIDEO DETECTION CAMERA, OPTICAL DETECTOR AND SNS "WATT AVE" ON SMA.
G	1-B (N)		5' (N)								2 (N)	SOUTH	RIGHT (N)	157+83.8	63.8'L	SEE COUNTY STANDARD DRAWING 5-23 AND PUSH BUTTON ASSEMBLY DETAIL ON THIS SHEET. ALL EQUIPMENT ON POLE SHALL BE NEW.

- ALL INDICATIONS SHALL BE LED.
- ALL VEHICLE HEADS SHALL HAVE 12" FACES AND BE DIALIGHT LONG LIFE XL15 LED TRAFFIC BALLS WITH CLEAR LENSES OR DIALIGHT 12" LONG LIFE XOD15 LED OMNI-ARROWS WITH CLEAR LENSES OR APPROVED EQUAL 15 YEAR WARRANTY TRAFFIC SIGNAL MODULES.
- COUNTY SIGNAL MAINTENANCE TO RECONFIGURE EXISTING VIDEO DETECTION ZONES. CONTACT PAUL BLANCO (916)875-5823 AT LEAST FIVE WORKING DAYS BEFORE CHANGING OR OR MODIFYING EXISTING LANE ASSIGNMENTS.

(N) = NEW
(E) = EXISTING
* = U-TURN LENS

LEGEND

- BC INSTALL PULL BOX IN EXISTING CONDUIT RUN
- CB INSTALL CONDUIT INTO EXISTING PULL BOX
- RC EQUIPMENT OR MATERIAL TO BE REMOVED AND BECOME THE PROPERTY OF THE CONTRACTOR
- RS REMOVE AND SALVAGE EQUIPMENT
- CC CONNECT NEW AND EXISTING CONDUIT, REMOVE EXISTING CONDUCTORS AND INSTALL CONDUCTORS AS INDICATED

CONSTRUCTION NOTES: (THIS SHEET ONLY)

1. EXISTING COUNTY R CONTROLLER CABINET TO REMAIN. CONTRACTOR SHALL MODIFY CABINET AS REQUIRED FOR NEW SIGNAL OPERATION.
2. EXISTING SERVICE PEDESTAL TO REMAIN.
3. EXISTING VECTOR VIDEO/RADAR HYBRID DETECTION CAMERA ON SIGNAL MAST ARM.
4. RELOCATE EXISTING VECTOR VIDEO/RADAR HYBRID DETECTION CAMERA ON PROPOSED SIGNAL MAST ARM. DETECTION MUST REMAIN OPERATIONAL AT ALL TIMES DURING CONSTRUCTION. EXISTING DETECTION UNIT SHALL BE RELOCATED ON THE SAME DAY THE NEW POLE IS ACTIVATED AND EX. POLE REMOVED.
5. FURNISH AND INSTALL CHRISTY B1324 PULLBOX WITH ONE EXTENSION PER COUNTY STD. DWG. 4-31.
6. RELOCATE TO SIGNAL MAST ARM ON NEW POLE A.
7. COUNTY SIGNAL MAINTENANCE TO RECONFIGURE EXISTING VIDEO DETECTION ZONES. CONTACT PAUL BLANCO (916)875-5823 AT LEAST FIVE WORKING DAYS BEFORE CHANGING OR MODIFYING EXISTING LANE ASSIGNMENTS.
8. FURNISH AND INSTALL SIGNAL HEAD WITH U-TURN LENS. SEE DETAIL A ON THIS SHEET.
9. EXISTING VECTOR VIDEO DETECTION CAMERA ON SIGNAL MAST ARM.
10. 3"c, SUPPLY AND INSTALL #10 SOLID GREEN LOCATOR WIRE
11. NOT USED.
12. REPLACE EXISTING PULL BOX WITH CHRISTY B1730 PULLBOX WITH ONE EXTENSION AND LID AT MEDIAN GRADE.
13. CONTRACTOR SHALL REMOVE EXISTING ø2 APS AND PATCH HOLE PER STATE STANDARDS
14. REPLACE EXISTING PULL BOX WITH FIBER SPLICE BOX PER COUNTY STD. DWGS. 5-22A & 5-22B ON THESE PLANS. LID SHALL BE AT MEDIAN GRADE AND MAINTAIN ALL EXISTING CONDUITS INTO BOX.
15. INSTALL 3" CONDUIT. RELOCATE EXISTING 2#8(STREET LIGHT) TO THIS CONDUIT. REPLACE CONDUCTORS IF NOT LONG ENOUGH.
16. RC EXISTING PULL BOX. CONNECT EXISTING EAST/WEST 3" CONDUIT. AB CONDUIT TO THE SOUTH.
17. RC EXISTING PULL BOX. CONNECT EXISTING EAST/WEST 3" CONDUIT. EXTEND EXISTING NORTH/SOUTH 3" CONDUIT TO NEW PULL BOX ON MEDIAN.
18. REPLACE EXISTING COUNTY IRRIGATION PULL BOX WITH #5 TRAFFIC RATED PULL BOX AND LID AT GRADE PER CALTRANS STD. ES-8B.
19. RC EXISTING RED PULL WIRE. RELOCATE EXISTING 2#8(STREET LIGHT) PER NOTE 15
20. INSTALL 3"C, #10 SOLID GREEN LOCATOR WIRE

CONDUIT & CONDUCTOR SCHEDULE

AWG	CIRCUIT	RUN 1	RUN 2	RUN 3	RUN 4	RUN 5	RUN 6	RUN 7
#14	ø1 SIGNALS		6	6	6	3	3	
	ø2 SIGNALS	(3)	(6)	(6)	3			
	ø3 SIGNALS							
	ø4 SIGNALS		6	6	6	6	6	3
	ø5 SIGNALS	(3)	(6)	(6)	(3)	(3)	(3)	(3)
	ø6 SIGNALS		6	6	6	6	6	3
	ø2 PED SIGNALS	(2)	(2)	(2)				
	ø4 PED SIGNALS	2	4	4	2	2	2	2
	APS(ø2)	(2)	(4)	(4)				
	APS(ø4)	2	4	4	2	2	2	2
	PPB COMMON	(1)	(2)	(2)	1	1	1	1
	SPARES	(3)	(6)	(6)	3	3	3	3
	TOTAL	(15)	(52)	(52)	32	26	26	17
#10	SIGNAL COMMON	(1)	(2)	(2)	1	1	1	1
#8	LIGHTING	(2)	(3)	(3)	3	3	3	2
EVD	EVD A		1	1	1	1	1	
	EVD B	(1)	(1)	(1)				
	EVD D		1	1	1	1	1	1
VIDEO DETECTION	ø1/ø6 VRDU		1	1	1	1	1	
	ø2/ø5 VRDU	(1)	(1)	(1)				
	ø4 VDU		1	1	1	1	1	1
CONDUIT SIZE		2.5"	2-3"	2-3"	3"	2.5"	3"	2.5"

ALL CONDUCTORS/CABLES ARE EXISTING UNLESS NOTED OTHERWISE.
(#) = NEW CONDUCTORS

NEW CONDUCTORS SIZE #10 AND SMaller SHALL BE SOLID COPPER.

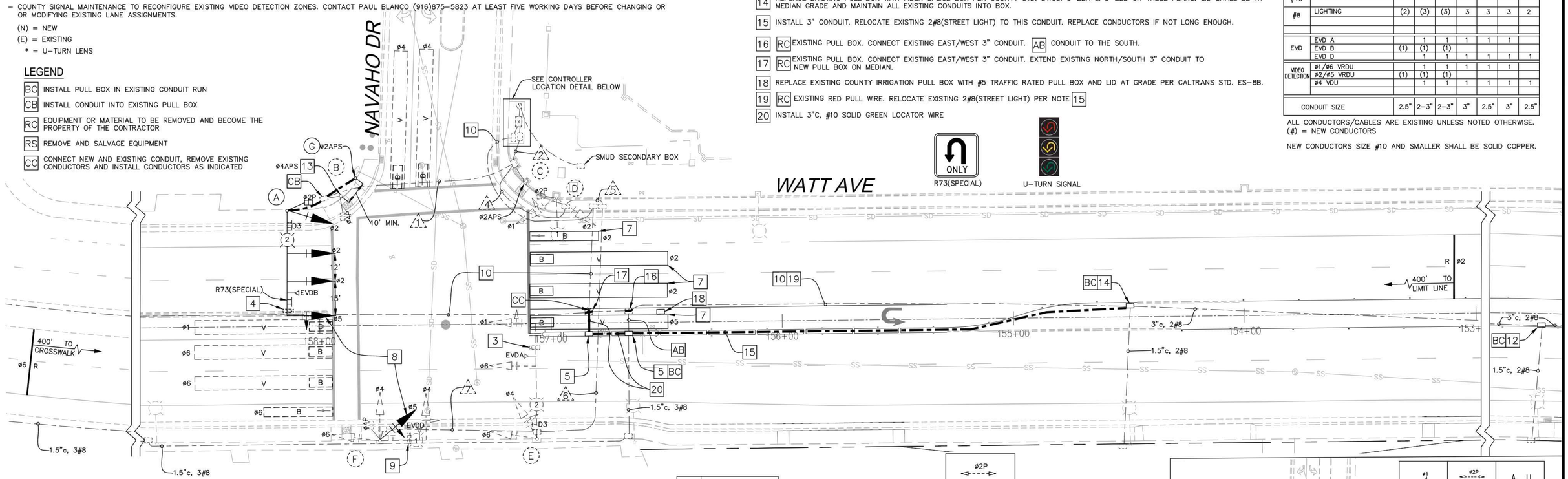

ONLY
R73(SPECIAL)

U-TURN SIGNAL

SPECIAL PROVISIONS:

General – The work shall conform to Section 49 of the County of Sacramento's 2024 Standard Construction Specifications and these Special Provisions.

Contractor Supplied Equipment – The contractor shall supply all traffic signal poles and all other material and equipment not specifically identified as "County Supplied" on the contract plans.

Foundations – The Contractor's attention is directed to Section 49-2.04 of the Standard Construction Specifications. All traffic signal poles and pull boxes shall be located outside the limits of sidewalk ramps, unless shown on the plans to be located on a wider than standard curb incorporated into the rear portion of the ramp.

APPROVED BY:

STEPHEN V. WHITE, P.E.
CHIEF, DEPARTMENT OF TRANSPORTATION
COUNTY OF SACRAMENTO

DATE

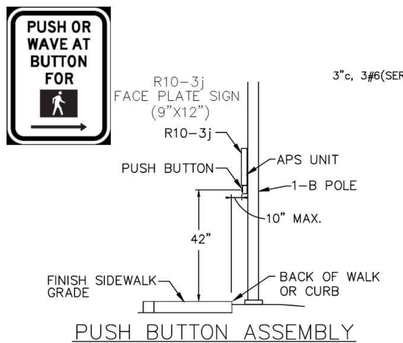

PUSH BUTTON ASSEMBLY
DETAIL AT BACK OF WALK
N.T.S.

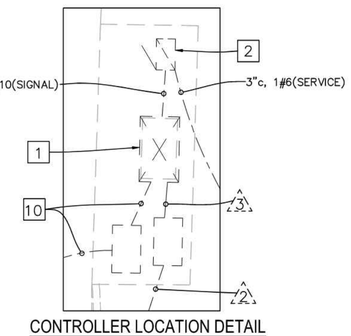

CONTROLLER LOCATION DETAIL
N.T.S.

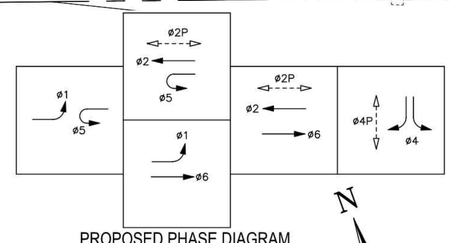

PROPOSED PHASE DIAGRAM

EV(A) = ø1+ø6
EV(B) = ø2+ø5
EV(D) = ø4

811
Know what's below,
Call before you dig.

THIS PLAN ACCURATE FOR ELECTRICAL WORK ONLY

N

0 20' 40'
SCALE: 1"=20'

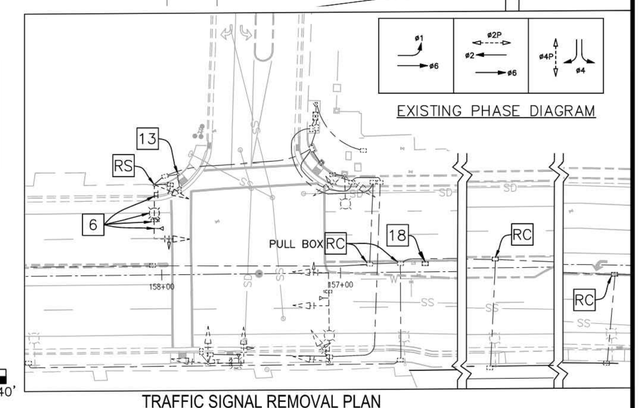

EXISTING PHASE DIAGRAM

TRAFFIC SIGNAL REMOVAL PLAN
SCALE 1"=40'

NO.	REVISIONS	BY	DATE

TRAFFIC SIGNAL PLAN APPROVED BY:

DATE

DEPARTMENT OF TRANSPORTATION
COUNTY OF SACRAMENTO

DESIGN BY : ESB
DRAWN BY : AM
CHECKED BY : ESB
SCALE : 1"=20'
DATE : SEPTEMBER 2026
FILE:

REGISTERED ENGINEER

DATE

PRELIMINARY
REGISTERED PROFESSIONAL ENGINEER
RUTA JARIWALA
No. 73840
Exp. 6/30/27
CIVIL
STATE OF CALIFORNIA

TJKM
4305 Hacienda Drive, Suite 550
Pleasanton, CA 94588
tjkm@tjkm.com

TRAFFIC SIGNAL MODIFICATION PLAN
WATT AVE AND NAVAHO DR

SACRAMENTO COUNTY

TS-1

1 OF 3

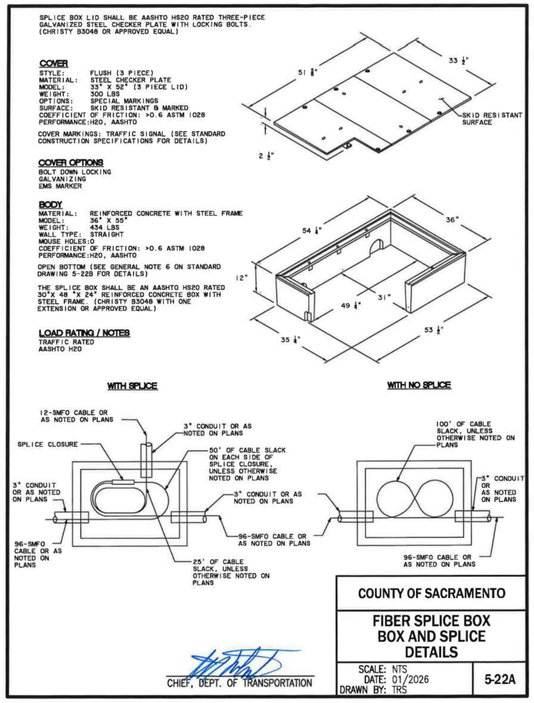

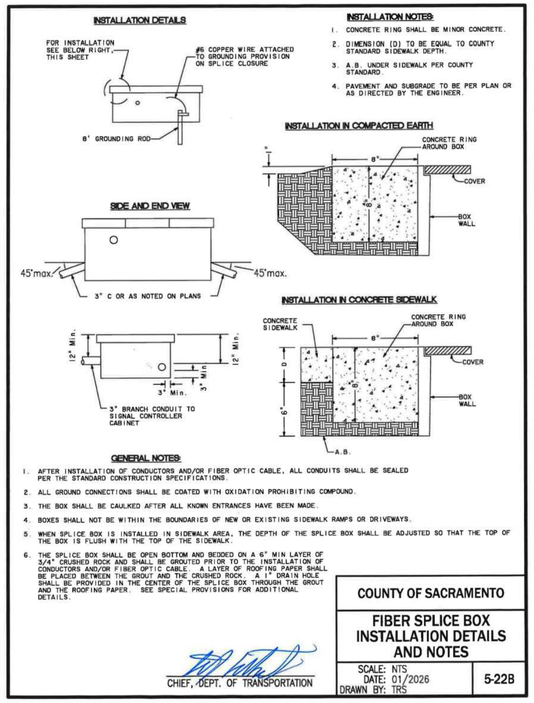

49-2.06 CONDUIT

The first sentence of the last paragraph of Section 49-2.06, "Conduit," is hereby deleted and replaced with the following:

Conduit installed by earth saw trenching in existing pavement shall have conduit depth and backfill per Section *49-2.02.A, "Earth Saw Trenching,"* in these Specifications. Conduit installed by trenching under proposed hardscape areas shall have 18" minimum cover from the top of the conduit to the finished grade. Conduit installed by trenching in all other areas shall have 30" minimum cover from the top of the conduit to the finished grade.

49-2.07 PULL BOXES

The second paragraph of Section 49-2.07 of the Standard Construction Specifications is hereby revised to the following:

Covers shall be factory marked per Section 86-1.02C, "Pull Boxes," of the State Specifications to indicate the contents of the pull box. Do not mark "CALTRANS". Metal covers shall be marked by the "bead weld" method as described in the State Specifications.

The following paragraph is hereby added to the end of Section 49-2.07 of the Standard Construction Specifications:

The pull box used for connecting conduits to the signal controller cabinet (home run box) shall be an AASHTO HS20 rated 24" x 36" reinforced concrete box with steel frame. (Christy B2436 or approved equal). The cover shall be AASHTO HS20 rated two-piece galvanized steel checker plate with locking bolts. Locking hardware shall be brass, stainless steel, or other non-corroding material. Skid resistant >0.6 ASTM 1028. Each cover portion shall have inset lifting pull slots. Cover marking to be "Traffic Signal" per paragraph two of this Section. (Christy B2436 or approved equal).

49-2.08.A Traffic Signal Interconnect

The Section 49-2.08.A, "Traffic Signal Interconnect," and all subsections of said section of the Standard Construction Specifications is hereby deleting each instance of "6E"and replacing it with the following: "17"x30"x24"."

49-2.08.A.(3) FIBER SPLICE BOXES AND PULL BOXES

FIBER SPLICE BOXES

The first paragraph of Section 49-2.08.A.(3), "Fiber Splice Boxes and Pull Boxes, Fiber Splice Boxes," of the Standard Construction Specifications is hereby replaced with the following:

Fiber splice boxes shall be in accordance with Section 49-2.07, "Pull Boxes," and Standard Drawings 5-22A and 5-22B of these Specifications, and as detailed in the Contract. Splice boxes shall be an AASHTO HS20 rated 30" x 48" x 24" reinforced concrete box with steel frame. (Christy B3048 with one extension or approved equal). The cover shall be AASHTO HS20 rated three-piece galvanized steel checker plate with locking bolts. Locking hardware shall be brass, stainless steel, or other non-corroding material. Skid resistant >0.6 ASTM 1028. Each cover portion shall have inset lifting pull slots. Cover marking to be "TRAFFIC SIGNAL" per Section 49-2.07, "Pull Boxes," of these Specifications. (Christy B3048 or approved equal).

PULL BOXES

The first paragraph of Section 49-2.08.A.(3), "Fiber Splice Boxes and Pull Boxes, Pull Boxes," of the Standard Construction Specifications is hereby replaced with the following:

Pull boxes shall be in accordance with Section 49-2.07, "Pull Boxes," of these Specifications and this Section. Pull boxes which contain 96 strand fiber optic backbone cable shall be an AASHTO HS20 rated 17" x 30" x 24" reinforced concrete box with steel frame. (Christy B1730 with one extension or approved equal). The cover shall be AASHTO HS20 rated galvanized steel checker plate with locking bolts. Locking hardware shall be brass, stainless steel, or other non-corroding material. Skid resistant >0.6 ASTM 1028. Cover portion shall have inset lifting pull slots. Cover marking to be "TRAFFIC SIGNAL" per Section 49-2.07, "Pull Boxes," of these Specifications. (Christy B1730 or approved equal)." Pull boxes which contain only 12 strand fiber optic drop cable shall be an AASHTO HS20 rated 13" x 24" x 24" reinforced concrete box with steel frame. (Christy B1324 with one extension or approved equal). The cover shall be AASHTO HS20 rated galvanized steel checker plate with locking bolts. Locking hardware shall be brass, stainless steel, or other non-corroding material. Skid resistant >0.6 ASTM 1028. Cover portion shall have inset lifting pull slots. Cover marking to be "TRAFFIC SIGNAL" per Section 49-2.07, "Pull Boxes," of these Specifications. (Christy B1324 or approved equal)." The use of pull boxes in fiber optic signal interconnect cable systems shall be minimized.

49-4.01 VEHICLE SIGNAL FACES

The second paragraph of Section 49-4.01, "Vehicle Signal Faces," is deleted and replaced with the following:

All vehicle signal heads supplied by the Contractor shall have 12-inch (300mm) signal faces with clear lens and illuminated by light emitting diode (LED).

The third (current last) paragraph of Section 49-4.01, "Vehicle Signal Faces," is deleted and replaced with the following:

All traffic signal LED modules shall have a 15-year warranty. The manufacturer shall provide a written 15-year warranty certificate or warranty statement for the circular and arrow signal modules. The warranty documentation must state that the modules meet the current ITE VTCSH LED specifications and provide the spec sheets.

A fourth paragraph is added to Section 49-4.01, "Vehicle Signal Faces," as follows:

The traffic signal LED modules shall be one of the following, or County approved equal.
- Current Lighting Solutions – GLI Brands, GTX City ELA Series
- Leotek Electronics USA, DT Series

49-4.04 PEDESTRIAN SIGNAL FACES

The last paragraph of Section 49-4.04, "Pedestrian Signal Faces," is deleted and replaced with the following two paragraphs:

The pedestrian signal housing shall be 16 inch, aluminum, olive green color, and manufactured by one of the following, or County approved equal.
- SWARCO McCain
- ORIUX (formerly Peek Traffic)

The pedestrian signal LED module shall be Current Lighting Solutions – GLI Brands, GTX PS7 VLA (CFF1), or County approved equal.

APPROVED BY:

STEPHEN V. WHITE, P.E.
CHIEF, DEPARTMENT OF TRANSPORTATION
COUNTY OF SACRAMENTO

DATE

THIS PLAN ACCURATE FOR ELECTRICAL WORK ONLY

Know what's below, Call before you dig.

NO.	REVISIONS	BY	DATE

TRAFFIC SIGNAL PLAN APPROVED BY:

DATE

DEPARTMENT OF TRANSPORTATION
COUNTY OF SACRAMENTO

DESIGN BY : ESB
DRAWN BY : AM
CHECKED BY : ESB
SCALE : N/A
DATE : SEPTEMBER 2026
FILE:

REGISTERED ENGINEER

DATE

PRELIMINARY FOR REVIEW ONLY
REGISTERED PROFESSIONAL ENGINEER
RUTA JARIWALA
No. 73840
Exp. 6/30/27
CIVIL
STATE OF CALIFORNIA

TJKM
4305 Hacienda Drive, Suite 550
Pleasanton, CA 94588
tjkm@tjkm.com

TRAFFIC SIGNAL MODIFICATION PLAN NOTES AND DETAILS

SACRAMENTO COUNTY

TS-2

CONSTRUCTION NOTES: (THIS SHEET ONLY)

1. REFRESH EXISTING 12" WHITE STRIPE
2. INSTALL MODIFIED DETAIL 26 PER COUNTY STD. DWG. 4-77 ALONG PROPOSED MEDIAN.
3. REMOVE EXISTING BUS SIGN AND INSTALL AT NEW BUS STOP LOCATION. SEE NOTE 4 ON THIS SHEET.
4. INSTALL EXISTING BUS STOP SIGN.

STRIPING NOTES:

1. ALL WORK SHALL CONFORM TO COUNTY OF SACRAMENTO IMPROVEMENT STANDARDS, AND STANDARD CONSTRUCTION SPECIFICATIONS, MOST RECENT EDITION, AND THE MOST RECENT EDITIONS OF THE STATE OF CALIFORNIA DEPARTMENT OF TRANSPORTING (CALTRANS) STANDARD SPECIFICATION, STANDARD PLANS, SIGN SPECIFICATION SHEETS, TRAFFIC MANUAL AND THE SPECIAL PROVISIONS.
2. ALL TRAFFIC STRIPES AND PAVEMENT LEGENDS SHALL BE THERMOPLASTIC PER SACRAMENTO COUNTY STANDARD CONSTRUCTION SPECIFICATION SECTION SS-105.
3. SIGNING AND STRIPING DETAILS REFER TO THOSE SHOWN IN CALTRANS STANDARD PLAN.

LEGEND:

- EXISTING STREET LIGHT
- EXISTING SIGN
- TYPE IX, PAVEMENT ARROW PER CALTRANS STD A24H
- BICYCLE DETECTION SYMBOL PER COUNTY STD. 4-77

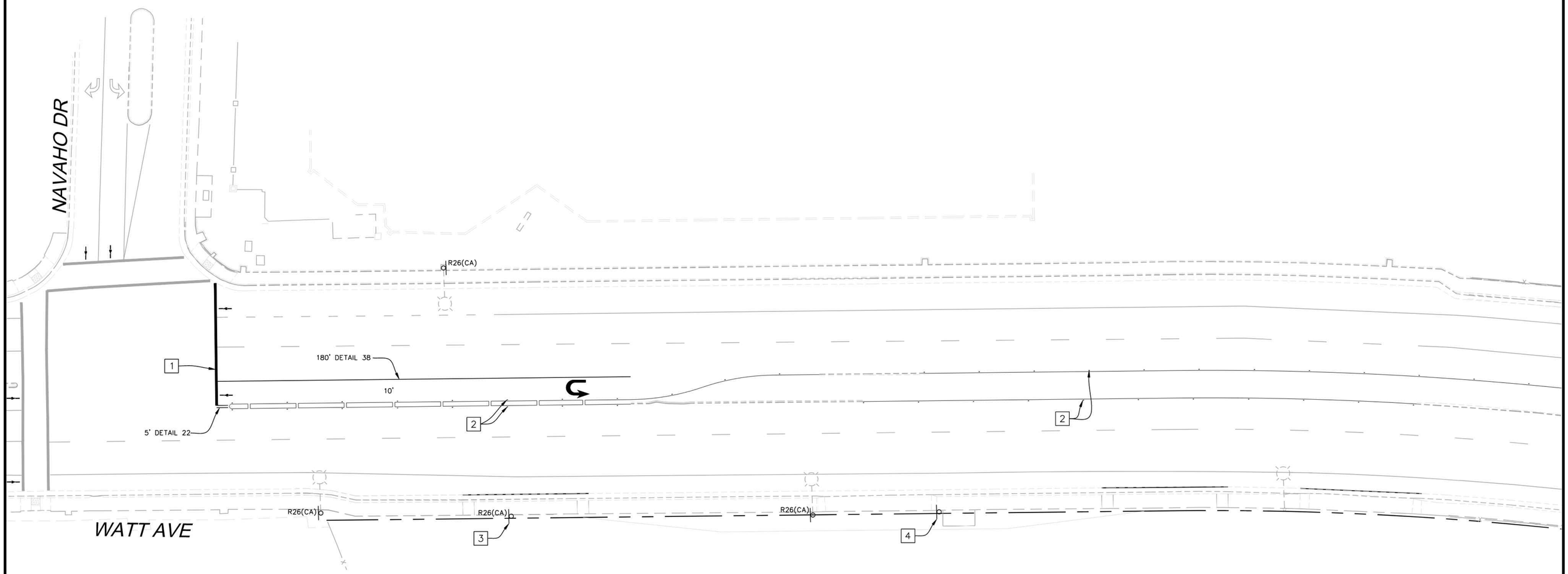

N

0 20' 40'

SCALE: 1"=20'

THIS PLAN ACCURATE FOR ELECTRICAL WORK ONLY

Know what's below, Call before you dig.

APPROVED BY:

STEPHEN V. WHITE, P.E.
CHIEF, DEPARTMENT OF TRANSPORTATION
COUNTY OF SACRAMENTO

DATE

NO.	REVISIONS	BY	DATE

TRAFFIC SIGNAL PLAN APPROVED BY:

DATE

DEPARTMENT OF TRANSPORTATION
COUNTY OF SACRAMENTO

DESIGN BY : ESB
DRAWN BY : AM
CHECKED BY : ESB
SCALE : 1"=20'
DATE : SEPTEMBER 2026
FILE:

REGISTERED ENGINEER

DATE

PRELIMINARY FOR REVIEW

REGISTERED PROFESSIONAL ENGINEER
RUTA JARIWALA
No. 73840
Exp. 6/30/27
CIVIL
STATE OF CALIFORNIA

TJKM
4305 Hacienda Drive, Suite 550
Pleasanton, CA 94588
tjkm@tjkm.com

SIGNING AND STRIPING PLAN
WATT AVE AND NAVAHO DR

SACRAMENTO COUNTY

SS-1

3 OF 3

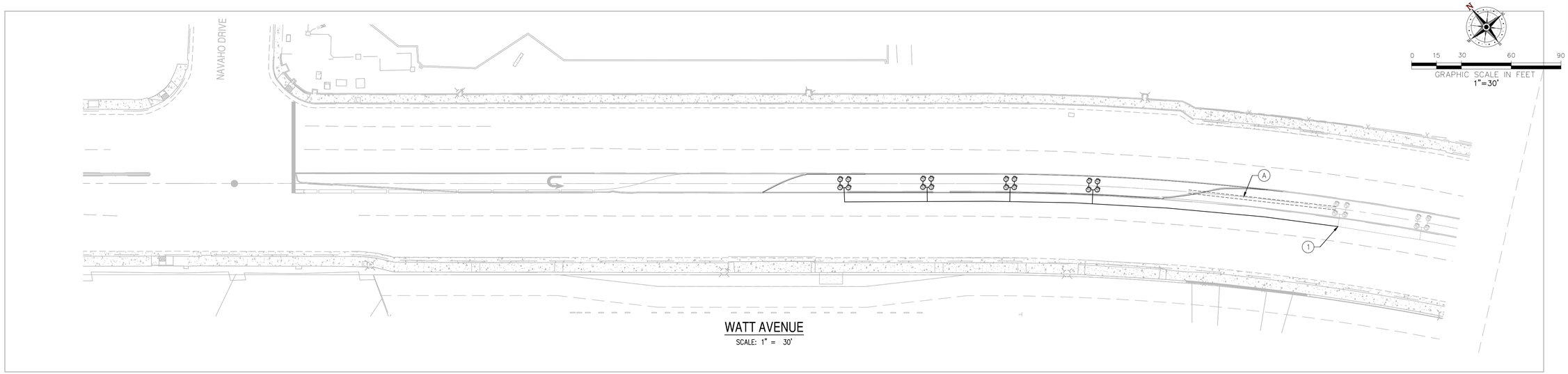

WATT AVENUE
SCALE: 1" = 30'

GENERAL IRRIGATION NOTES

GENERAL IRRIGATION NOTES

1. ANY AND ALL PORTIONS OF THIS WORK SHALL BE CONSTRUCTED IN COMPLIANCE WITH ALL APPLICABLE RULES AND REGULATIONS AS SET FORTH BY LOCAL MUNICIPALITIES, STATE AND NATIONAL AGENCIES. IN THE EVENT THERE IS A CONFLICT WITH THESE PLANS AND THE AGENCIES STATED ABOVE, THE GOVERNING BODY'S REGULATIONS SHALL PREVAIL.
2. IRRIGATION SHALL BE CONSISTENT WITH THE COUNTY WATER CONSERVATION REQUIREMENTS (15.92.010) AND THE STATE WATER EFFICIENT LANDSCAPE ORDINANCE (AB 1881).
3. PRIOR TO BIDDING AND COMMENCEMENT OF SITE WORK, THE CONTRACTOR SHALL BECOME FAMILIAR WITH/AND EXAMINE CONDITIONS OF THE PROJECT SITE, VERIFYING LOCATIONS OF ALL EXISTING UTILITIES, STRUCTURES AND SERVICES. LOCATIONS OF ITEMS SHOWN ON THESE PLANS ARE ONLY APPROXIMATIONS. ANY DISCREPANCIES DISCOVERED SHALL BE REPORTED TO THE DISTRICT. FAILURE TO REPORT DISCREPANCIES TO THE DISTRICT BEFORE COMMENCEMENT OF SITE WORK IMPLIES ACCEPTANCE OF SITE CONDITIONS AND COSTS ASSOCIATED WITH CORRECTING IRRIGATION LAYOUTS.
4. ANY EXISTING SITE FEATURES, GRADE CHANGES, OR SITE PLAN DESIGN CHANGES NOT SPECIFICALLY ADDRESSED ON THESE PLANS, (OR UNKNOWN CONDITIONS THAT WERE NOT APPARENT DURING THE DESIGN PROCESS) THAT WILL IMPACT INSTALLATION OR OPERATING OF IRRIGATION SYSTEMS IN ANY WAY, SHALL BE REPORTED TO THE LANDSCAPE ARCHITECT/DISTRICT PRIOR TO COMMENCEMENT OF SITE WORK.
5. CONTRACTOR SHALL INSTALL IRRIGATION EQUIPMENT PER DETAILS AND SPECIFICATIONS. ALL IRRIGATION EQUIPMENT REQUIRED FOR PROJECT COMPLETION BUT NOT DETAILED ON THESE PLANS SHALL BE INSTALLED PER LOCAL AND STATE CODES AND MANUFACTURER'S WRITTEN INSTALLATION RECOMMENDATIONS.
6. CONTRACTOR SHALL OBTAIN ALL REQUIRED PERMITS FOR SUCCESSFUL COMPLETION OF PROJECT PRIOR TO COMMENCEMENT OF WORK.
7. CONTRACTOR SHALL BE RESPONSIBLE FOR OBTAINING ANY AND ALL PROJECT RELATED ARCHITECTURAL OR ENGINEERING DRAWINGS PRIOR TO COMMENCEMENT OF WORK.
8. THE CONTRACTOR SHALL REPAIR, REPLACE, OR COMPENSATE DISTRICT FOR ALL ITEMS DAMAGED BY THEIR WORK.
9. THE CONTRACTOR SHALL COORDINATE AND SCHEDULE INSTALLATION EFFORTS WITH THOSE OF OTHER TRADES TO AVOID COSTLY DELAYS AND ERRORS.

INSPECTIONS

1. CONTACT COUNTY OF SACRAMENTO, 48HRS PRIOR TO TEST TO SCHEDULE ALL IRRIGATION INSPECTIONS. REQUIRED TESTING:
   A. COVERAGE TEST: COVERAGE TEST SHALL BE PERFORMED PRIOR TO INSTALLATION OF ANY PLANT MATERIAL. IRRIGATION AUDIT SHALL BE PERFORMED AT THIS POINT, BY CERTIFIED IRRIGATION AUDITOR. CONTRACTOR SHALL PROVIDE RESULTS TO LANDSCAPE ARCHITECT/DISTRICT AND MAKE ALL NECESSARY CORRECTIONS PRIOR TO PLANTING. FAILURE TO DO SO SHALL MAKE ALL REQUIRED COSTS ASSOCIATED WITH ADJUSTING IRRIGATION THE CONTRACTOR'S RESPONSIBILITY.

OVERHEAD SPRAY AND ROTOR NOTES

1. ALL HEADS SHALL INCLUDE A FACTORY INSTALLED DRAIN CHECK VALVE TO PREVENT LOW HEAD DRAINAGE.
2. ALL HEADS SHALL INCLUDE A FACTORY INSTALLED PRESSURE REGULATOR. SEE LEGEND FOR SPECIFIED PRESSURE LEVELS OF INDIVIDUAL HEADS.
3. ALL HEADS AND NOZZLES SHALL BE INSTALLED PER PLANS. AFTER INSTALLATION, ADJUST ALL ARCS AND THROWS FOR EVEN COVERAGE AND TO PREVENT OVERSPRAY ONTO PAVEMENT, BUILDINGS, WALLS, OR EQUIPMENT. THIS INCLUDES BUT IS NOT LIMITED TO ADJUSTMENTS TO THE RADIUS REDUCTION SCREW, SCREEN REPLACEMENTS, AND APPROVED NOZZLE REPLACEMENTS. ANY VERTICAL OBSTRUCTIONS NOT NOTED ON THESE PLANS SHALL BE REPORTED TO THE LANDSCAPE ARCHITECT PRIOR TO COMMENCING WORK.
4. FLOOD TRENCHES TO COMPACT SOIL PRIOR TO LEVELING HEADS. ALL HEADS SHALL BE INSTALLED FLUSH AND PERPENDICULAR TO FINISH GRADE UNLESS OTHERWISE NOTED OR DETAILED.

PVC PIPING NOTES

1. PIPING AND EQUIPMENT LAYOUT IS SHOWN SCHEMATICALLY FOR VISUAL CLARITY. PIPING AND EQUIPMENT SHOWN WITHIN PAVED AREAS SHALL BE INSTALLED WITHIN AREAS DESIGNATED FOR LANDSCAPE. MAINLINES SHOULD BE LOCATED A MINIMUM OF 18" OFF ADJACENT PAVEMENT OR OTHER OBSTACLES.
2. NON-PRESSURIZED LINES SHALL BE BURIED WITH A MINIMUM OF 18" COVER. PRESSURIZED MAINLINES SHALL BE BURIED WITH A MINIMUM OF 24" COVER. UNDERGROUND WARNING TAPE READING "CAUTION, BURIED IRRIGATION LINE BELOW" SHALL BE INSTALLED 12" ABOVE PRESSURIZED LINES.
3. PIPE SIZES SHALL BE INSTALLED PER PLANS. SMALLER PIPE SIZE SUBSTITUTIONS ARE NOT ACCEPTABLE; LARGER PIPE SIZES MAY BE APPROVED.
4. SOLVENT WELD FITTINGS FOR MAINLINES 4" AND SMALLER SHALL BE SCHEDULE 80 PVC. ALL THREADED FITTINGS SHALL BE SCHEDULE 80 PVC. FOR MAINLINES 6" AND LARGER, USE LEEMCO STRAP FITTINGS WITH THRUST BLOCKS.

SLEEVING NOTES

1. SCHEDULE 40 PVC SLEEVES SHALL PROVIDED FOR ALL MAINLINE PIPING, LATERAL LINE PIPING AND WIRING UNDER PAVEMENT. LATERAL LINE SLEEVES NOT REQUIRED UNDER PAVEMENT SPANNING LESS THAN 6'. ANY LATERAL LINES NOT REQUIRING A SLEEVE SHALL BE INSTALLED PRIOR TO PAVING AND SHALL BE SCHEDULE 40 PVC.
2. SLEEVES SHALL BE SIZED PER PLAN OR TWICE THE SIZE OF THE PIPE WHEN NOT SPECIFIED. ELECTRICAL WIRE SLEEVES SHALL BE OF SUFFICIENT SIZE FOR THE REQUIRED NUMBER OF WIRES. PIPING AND WIRING SHALL BE IN SEPARATE SLEEVES.
3. SLEEVES SHALL EXTEND A MINIMUM OF 12" BEYOND PAVED SURFACES.

WATER CONSERVATION STATEMENT

1. I HAVE COMPLIED WITH THE CRITERIA PROVIDED BY SACRAMENTO COUNTY AND APPLIED THEM IN THE IRRIGATION DESIGN PLAN.
2. CHANGES TO THE APPROVED PLANS OR FIELD SUBSTITUTIONS SHALL NOT BE PERMITTED WITHOUT PRIOR WRITTEN APPROVAL FROM THE LANDSCAPE ARCHITECT AND THE COUNTY OF SACRAMENTO. IF THE DISTRICT/CONTRACTOR DEVIATES FROM THE APPROVED PLAN WITHOUT PRIOR WRITTEN APPROVAL THEY WILL BE REQUIRED TO MAKE ANY CORRECTIONS, AT THEIR OWN EXPENSE, TO BRING THE LANDSCAPE AND IRRIGATION INTO COMPLIANCE WITH THE APPROVED PLANS AND THE STATE MODEL WATER EFFICIENT LANDSCAPE ORDINANCE.

CLOSE-OUT DOCUMENTS

1. AT THE COMPLETION OF THE PROJECT THE CONTRACTOR SHALL SUPPLY A "CERTIFICATE OF COMPLETION" DOCUMENT. THE DOCUMENT SHALL INCLUDE:
   A. PROJECT INFORMATION SHEET THAT CONTAINS:
      1. DATE
      2. PROJECT NAME
      3. PROJECT APPLICANT NAME, TELEPHONE NUMBER, AND MAILING ADDRESS.
      4. PROJECT ADDRESS
      5. PROPERTY DISTRICT NAME, TELEPHONE NUMBER AND MAILING ADDRESS.
   B. CERTIFICATION BY EITHER THE SIGNER OF THE LANDSCAPE DESIGN PLAN, THE DESIGNER OF THE IRRIGATION DESIGN PLAN OR THE LICENSED LANDSCAPE CONTRACTOR THAT THE LANDSCAPE PROJECT HAS BEEN INSTALLED PER THE APPROVED LANDSCAPE DOCUMENTATION PACKAGE.
      1. WHERE THERE HAVE BEEN SIGNIFICANT CHANGES MADE IN THE FIELD DURING CONSTRUCTION THESE "AS-BUILT" OR RECORD DRAWINGS SHALL BE INCLUDED WITH THE CERTIFICATION.
      2. A DIAGRAM OF THE IRRIGATION PLAN SHOWING HYDROZONES SHALL BE KEPT WITH THE IRRIGATION CONTROLLER FOR SUBSEQUENT MANAGEMENT PURPOSES.
   C. IRRIGATION SCHEDULING PARAMETERS USED TO SET THE CONTROLLER.
   D. LANDSCAPE AND IRRIGATION MAINTENANCE SCHEDULE
   E. IRRIGATION AUDIT REPORT.
   F. SOILS ANALYSIS REPORT IF NOT SUBMITTED WITH LANDSCAPE DOCUMENTATION PACKAGE AND DOCUMENTATION VERIFYING IMPLEMENTATION OF SOIL REPORT RECOMMENDATIONS.

SHEET NOTES

(1) CONNECT TO EXISTING 3/4" LATERAL LINE AT NEAREST EXISTING TREE PIT.

SHEEVING NOTES

(A) (1) 3" LATERAL LINE SLEEVE

IRRIGATION LEGEND

SYMBOL	MANUFACTURER/MODEL/DESCRIPTION	QTY	PSI	GPM	RADIUS	DETAIL
SPRAY						
	RAINBIRD 1806-PRS-5Q-B SPRAYHEAD, 6IN. POP-UP WITH CHECK VALVE, PRESSURE REGULATED TO 30 PSI, WITH MPR 5Q-B NOZZLE.	16	30	0.5	5'	1/L3.0
	EXISTING ROTARY NOZZLE TO REMAIN (REFER TO COUNTY AS-BUILT PLANS)	–	–	–	–	–
PIPING						
	IRRIGATION LATERAL LINE: SCHEDULE 40 PVC SCHEDULE 40 PVC IRRIGATION PIPE. ONLY LATERAL TRANSITION PIPE SIZES 1" AND ABOVE ARE INDICATED ON THE PLAN, WITH ALL OTHERS BEING 3/4" IN SIZE.	355 L.F.	–	–	–	2/L3.0
	EXISTING LATERAL LINE (REFER TO COUNTY AS-BUILT PLANS)	–	–	–	–	–
	PIPE SLEEVE: PVC SCHEDULE 40	VARIES	–	–	–	3/L3.0

Know what's **below.**
Call before you dig.

Westwood
Westwood Professional Services, Inc.
6200 STONERIDGE MALL ROAD, SUITE 330
PLEASANTON, CA 94588
T: 925.223.8340
www.westwoodps.com

NO.	DESCRIPTION	DATE	BY	APP. DATE	APP.

7781 WATT AVENUE - SIERRA CREEK COMMUNITY PARK
IMPROVEMENT PLANS
IRRIGATION PLAN

TH

DATE: 9-1-2026
DRAFTER: TH
DESIGNER: TH
CHECKED: KF

PROJECT NO.
41541

LICENSED LANDSCAPE ARCHITECT
KARIN N. FOLSOM
Signature
03/31/27
Renewal Date
9-1-2026
Date
STATE OF CALIFORNIA

L1.0
SHEET L1.0 OF 13

SACRAMENTO COUNTY, CA

Last Saved by: ALiao
Plot Scale/Time: 1:30000 10:03 AM
Drawing: N:_CDE\Pleasanton\41541 NRHPD Sierra Creek Park\Landscape\ConstPlans\Watt Ave\Pls\41541-WATT-IR

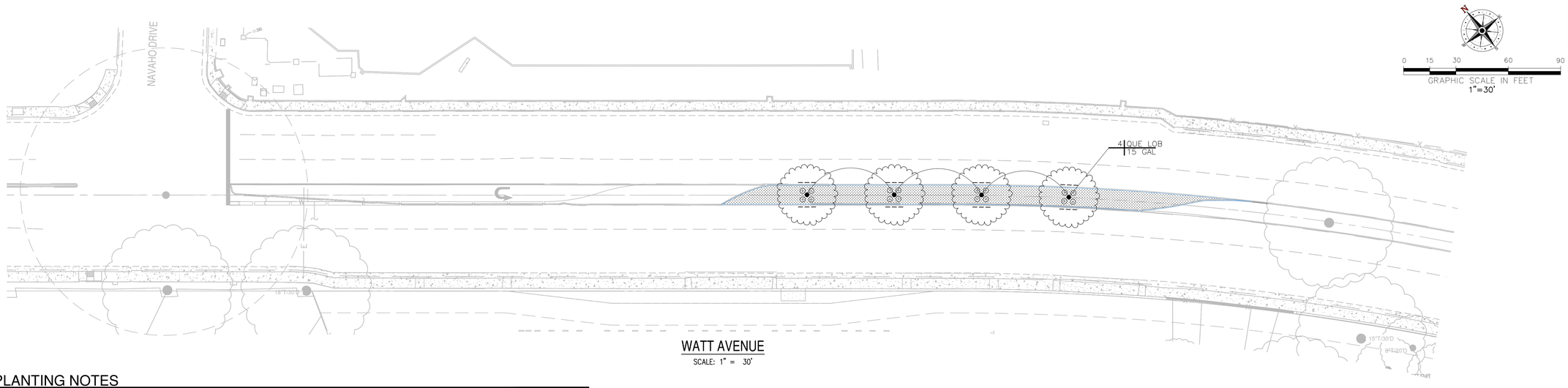

WATT AVENUE

SCALE: 1" = 30'

GENERAL PLANTING NOTES

GENERAL

1. ANY AND ALL PORTIONS OF THIS WORK SHALL BE CONSTRUCTED IN COMPLIANCE WITH ALL APPLICABLE RULES AND REGULATIONS AS SET FORTH BY LOCAL MUNICIPALITIES, STATE AND NATIONAL AGENCIES. IN THE EVENT THERE IS A CONFLICT WITH THESE PLANS AND THE AGENCIES STATED ABOVE, THE GOVERNING BODY'S REGULATIONS SHALL PREVAIL.
2. PRIOR TO BIDDING AND COMMENCEMENT OF SITE WORK, THE CONTRACTOR SHALL BECOME FAMILIAR WITH AND EXAMINE CONDITIONS OF THE PROJECT SITE, VERIFYING LOCATIONS OF ALL EXISTING UTILITIES, STRUCTURES AND SERVICES. LOCATIONS OF ITEMS SHOWN ON THESE PLANS ARE ONLY APPROXIMATIONS. ANY DISCREPANCIES DISCOVERED SHALL BE REPORTED TO THE LANDSCAPE ARCHITECT. FAILURE TO REPORT DISCREPANCIES TO THE LANDSCAPE ARCHITECT BEFORE COMMENCEMENT OF SITE WORK IMPLIES ACCEPTANCE OF SITE CONDITIONS AND COSTS ASSOCIATED WITH CORRECTING PLANTING RELATED INSTALLATIONS.
3. CONTRACTOR SHALL PURCHASE AND PROVIDE ALL LABOR, MATERIALS, AND EQUIPMENT NECESSARY TO COMPLETE THE LANDSCAPE WORK (I.E. TREE PLANTING, SHRUB PLANTING, ETC.) AS SHOWN ON THE DRAWINGS AND AS SPECIFIED. THE CONTRACTOR SHALL BE RESPONSIBLE FOR PROTECTION OF THESE ITEMS UNTIL THE PROJECT IS COMPLETED.
4. ALL SCALED DIMENSIONS ARE APPROXIMATE. PRIOR TO PROCEEDING WITH ANY WORK, THE CONTRACTOR SHALL CAREFULLY CHECK AND VERIFY ALL DIMENSIONS AND QUANTITIES AND SHALL IMMEDIATELY INFORM THE DISTRICT'S REPRESENTATIVE OF ANY DISCREPANCY BETWEEN THE INFORMATION. NUMBERS PROVIDED ON THIS PLAN ARE FOR REFERENCE ONLY. THE NUMBER OF SYMBOLS SHOWN ON THE PLANS SHALL HAVE PRIORITY OVER THE NUMBERS GIVEN.

SOIL PREPARATION

1. THE LANDSCAPE CONTRACTOR SHALL INSPECT THE PLANTER AREAS FOR EXTREME COMPACTION PARTICULARLY AROUND CONSTRUCTION AREAS. CONTRACTOR SHALL PROVIDE MEANS FOR RIPPING TO A DEPTH OF TWELVE INCHES (12") ALL COMPACTED AREAS TO INSURE PROPER ROOT GROWTH OF NEW PLANTINGS.
2. CULTIVATE TOP SIX INCHES (6") OF SOIL IN ALL AREAS.
3. NO SOIL SHALL BE HANDLED OR WORKED WHEN IN A MUDDY CONDITION.
4. FINISH GRADE SHALL BE APPROVED BY THE OWNERS REPRESENTATIVE BEFORE ANY PLANTING BEGINS.
5. AN EVEN FINISHED GRADE WITH NO RIDGES OR DEPRESSIONS SHALL BE CAREFULLY MAINTAINED DURING OPERATIONS TO ENSURE PROPER SURFACE DRAINAGE.
6. SHRUB AREAS SHALL BE FINE GRADED TO WITHIN TWO INCH (2") BELOW ADJACENT SURFACES.
7. CONTRACTOR SHALL PERFORM SOILS ANALYSIS AND OBTAIN AMENDMENT RECOMMENDATIONS FROM SOIL LABORATORY PRIOR TO BEGINNING WORK AND AFTER BACKFILL SOIL HAS BEEN PLACED. CONTRACTOR SHALL AMEND SOILS PER MOST RECENT RECOMMENDATIONS. THE FOLLOWING, FOR BID PURPOSE ONLY, MINIMUM AMENDMENTS SHALL BE INCORPORATED INTO ALL PLANTED AREAS AND TILLED INTO THE SOIL TO A DEPTH OF SIX TO TWELVE INCHES (6"–12"):
   –6–20–20 FERTILIZER @24 LBS/1000 S.F.
   –ORGANIC COMPOST AT 4 CUBIC YARDS PER 1,000 SF.
   –BACKFILL MIX, 1/3 NATIVE SOIL, MIXED WITH 2/3 SOIL AMENDMENT.
8. PRIOR TO SCHEDULING FINAL INSPECTIONS FOR THE BUILDING PERMIT, THE SOILS TEST REQUIREMENT MUST BE COMPLETED. SOILS TEST AND DOCUMENTATION VERIFYING THE IMPLEMENTATION OF THE SOILS TEST RECOMMENDATIONS SHALL BE SUBMITTED WITH THE CERTIFICATE OF COMPLETION TO THE COUNTY AS REQUIRED BY THE MWELO.

PLANT MATERIAL

1. SUBSTITUTIONS WILL NOT BE PERMITTED UNLESS APPROVED BY THE DISTRICT.
2. PLANTS SHALL BE SOUND, HEALTHY, VIGOROUS, FREE FROM NOXIOUS WEEDS, PLANT DISEASE, INSECT PESTS, OR THEIR EGGS, AND SHALL HAVE HEALTHY, NORMAL ROOT SYSTEMS AND COMPLY WITH ALL STATE AND LOCAL REGULATIONS.
3. PLANTS SHALL NOT BE PRUNED PRIOR TO DELIVERY EXCEPT AS AUTHORIZED BY THE OWNER'S REPRESENTATIVE. DO NOT "TOP" TREES.
4. ALL PLANT MATERIAL IS SUBJECT TO REVIEW AND APPROVAL BY THE OWNER PRIOR TO INSTALLATION. THE CONTRACTOR SHALL BE RESPONSIBLE FOR REPLACING ANY REJECTED MATERIAL.
5. CONTRACTOR SHALL PROVIDE PLANT MATERIAL DELIVERY TO JOB SITE. CONTRACTOR SHALL BE RESPONSIBLE FOR STORAGE, CARE, INSTALLATION, AND GUARANTEE FROM TIME OF DELIVERY. DO NOT STORE PLANT MATERIAL ON CONCRETE OR ASPHALT SURFACES.

WEED CONTROL

1. PRIOR TO PLANTING THE CONTRACTOR SHALL SPRAY A POST EMERGENT HERBICIDE TO KILL EXISTING WEEDS. ALLOW ONE (1) WEEK FOR WEEDS TO COMPLETELY DIE AND REMOVE FROM SITE.
2. AFTER PLANTING SHRUB BEDS AND PRIOR TO TOPDRESSING, APPLY RONSTAR–G(OR EQUAL) PRE–EMERGENT WEED CONTROL IN THE AMOUNTS SPECIFIED BY THE MANUFACTURER.

PLANTING OPERATIONS

1. ALL PLANTS SHALL BE PLANTED, STAKED, AND TIED ACCORDING TO THESE PLANS.
2. STAKE TREES AT THE LOWEST POINT WHERE THE TREE CAN SUPPORT ITSELF.
3. THOROUGHLY WATER TREES, SHRUBS, AND GROUNDCOVER IMMEDIATELY AFTER PLANTING.
4. RELOCATION OF TREES: IN THE EVENT THAT UNDERGROUND CONSTRUCTION WORK OR OBSTRUCTIONS ARE ENCOUNTERED IN EXCAVATION OF THE TREE HOLES, ALTERNATE LOCATIONS WILL BE SELECTED BY THE OWNER'S REPRESENTATIVE.
5. ALL TREES SHALL BE PRUNED TO REMOVE BROKEN AND DAMAGED LIMBS AND BRANCHES. NO OTHER PRUNING IS APPROVED.
6. 3" TOPDRESSING OF DECORATIVE MULCH (COLOR: BROWN) (MAXIMUM 2 INCH LENGTHS) TO BE INSTALLED PER DETAILS. WASH EXCESS BARK OFF LEAVES AND DO NOT ENGULF STEMS OF PLANTS AND GROUNDCOVER.
7. FERTILIZER TABLETS SHALL BE BEST–PAKS (20–10–5) PLANTER PACKETS PLACED IN ALL PLANTING PITS PER DETAILS.

PLANT ESTABLISHMENT AND MAINTENANCE PERIODS

1. THE LANDSCAPE CONTRACTOR SHALL PROVIDE AN ESTABLISHMENT PERIOD OF THIRTY (30) DAYS COMMENCING AT COMPLETION OF PLANT MATERIAL INSTALLATION.
2. APPROXIMATELY 30 DAYS AFTER INITIAL PLANTING, APPLY A BALANCED FERTILIZER TO TURF AND SHRUB AREAS PER MANUFACTURER'S RECOMMENDED RATES.
3. FOLLOWING PROJECT ACCEPTANCE, THE LANDSCAPE CONTRACTOR SHALL MAINTAIN THE INSTALLATION FOR THIRTY (30) DAYS INCLUDING MOWING AND MAINTENANCE OF SHRUBS, TREES, FERTILIZATION, REMOVING CLIPPINGS FROM SITE, EDGING, AND THE CONTROL OF WEEDS. ADJUSTMENTS TO THE IRRIGATION SYSTEM FOR TIME AND DURATION OF FLOWS AND REPLACEMENT AND ADJUSTMENTS TO HEADS AND EMITTERS ARE ALSO REQUIRED.
4. THE LANDSCAPE CONTRACTOR SHALL BE RESPONSIBLE FOR DISEASE AND PEST CONTROL DURING THE ESTABLISHMENT AND MAINTENANCE PERIODS.

ACCEPTANCE

1. COMPLETED WORK SHALL BE REVIEWED AND OBSERVED BY OWNER. ANY MODIFICATIONS REQUIRED TO MEET THE STANDARDS AS SET FORTH IN THESE LANDSCAPE DOCUMENTS SHALL BE SUBMITTED TO THE LANDSCAPE CONTRACTOR AND CORRECTED AT THE LANDSCAPE CONTRACTOR'S EXPENSE. CORRECTED ITEMS MUST BE APPROVED BY OWNER.
2. UPON FINAL ACCEPTANCE, LANDSCAPE CONTRACTOR SHALL INSTRUCT MAINTENANCE PERSONNEL AS TO THE OPERATION AND MAINTENANCE OF ALL LANDSCAPING.

GUARANTEE

1. ALL TREES AND SHRUBS SHALL BE GUARANTEED BY THE LANDSCAPE CONTRACTOR TO LIVE AND GROW IN A HEALTHY UPRIGHT POSITION DURING THE ESTABLISHMENT AND MAINTENANCE PERIODS. REPLACEMENT MATERIAL WILL BE AT THE LANDSCAPE CONTRACTOR'S EXPENSE EXCEPT IF VANDALIZED OR STOLEN.

CLOSE–OUT DOCUMENTS

1. AT THE COMPLETION OF THE PROJECT THE CONTRACTOR SHALL SUPPLY A "CERTIFICATE OF COMPLETION" DOCUMENT. THE DOCUMENT SHALL INCLUDE:
   A. PROJECT INFORMATION SHEET THAT CONTAINS:
      1. DATE
      2. PROJECT NAME
      3. PROJECT APPLICANT NAME, TELEPHONE NUMBER, AND MAILING ADDRESS.
      4. PROJECT ADDRESS
      5. PROPERTY OWNER NAME, TELEPHONE NUMBER AND MAILING ADDRESS.
   B. CERTIFICATION BY EITHER THE SIGNER OF THE LANDSCAPE DESIGN PLAN, THE DESIGNER OF THE IRRIGATION DESIGN PLAN OR THE LICENSED LANDSCAPE CONTRACTOR THAT THE LANDSCAPE PROJECT HAS BEEN INSTALLED PER THE APPROVED LANDSCAPE DOCUMENTATION PACKAGE.
      1. WHERE THERE HAVE BEEN SIGNIFICANT CHANGES MADE IN THE FIELD DURING CONSTRUCTION THESE "AS–BUILT" OR RECORD DRAWINGS SHALL BE INCLUDED WITH THE CERTIFICATION.
      2. A DIAGRAM OF THE IRRIGATION PLAN SHOWING HYDROZONES SHALL BE KEPT WITH THE IRRIGATION CONTROLLER FOR SUBSEQUENT MANAGEMENT PURPOSES.
   C. IRRIGATION SCHEDULING PARAMETERS USED TO SET THE CONTROLLER.
   D. LANDSCAPE AND IRRIGATION MAINTENANCE SCHEDULE
   E. IRRIGATION AUDIT REPORT.
   F. SOILS ANALYSIS REPORT IF NOT SUBMITTED WITH LANDSCAPE DOCUMENTATION PACKAGE AND DOCUMENTATION VERIFYING IMPLEMENTATION OF SOIL REPORT RECOMMENDATIONS.

PLANT SCHEDULE

SYMBOL	BOTANICAL NAME	COMMON NAME	SIZE	APPROX SPACING	WATER USE	QTY	REMARKS
TREES							
QUE LOB	QUERCUS LOBATA	VALLEY OAK	15 GAL	PER PLAN	LOW	4	F&B, FGR
SHRUBS							
⊙	DIETES BICOLOR	FORTNIGHT LILY	1 GAL	36" o.c.	LOW	16	F&B, FGR, MATCH, TRI SP, YLW FLW
MISCELLANEOUS							
	BARK MULCH					2,800 S.F.	
— — —	ROOT BARRIERS (DEEP ROOT UB18–2, OR EQUAL)					80 L.F.	SEE DETAIL 6, SHEET L3.0

PLANT LIST ABBREVIATIONS

BR GR	BRANCHED TO GROUND	MATCH	MATCHED SIZE, FORM, CALIPER, BRANCHING AND CULTIVAR. SELECT FORM ONE LOT, ONE GROWER, FOR GUARANTEED CONSISTENCY THROUGH LIFE OF PLANTS. IN GENERAL PLANTS WITHIN A GROUP OR AREA ARE TO BE MATCHED, UNLESS NOTED OTHERWISE
DV	DWARF VARIETY		
F&B	FULL DENSE, BUSHY, VIGOROUS PLANTS, WITH YOUNG GROWTH CLOSELY SPACED ON BRANCHES		
FGR	FREE OF GIRDLING ROOTS	MULTI	MULTI STEMMED
FLW	FLOWER	SL	SINGLE, STRAIGHT, DOMINANT LEADER
GAL	GALLON CAN	TRI SP	TRIANGULARLY SPACED
HI BR	HIGH BRANCHED	TTW	TRAIN TO WALL
LO BR	LOW BRANCHED	VAR	VARIEGATED SPECIES

TREE CALLOUT

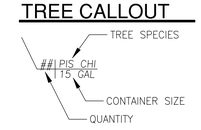

811 Know what's below. Call before you dig.

Westwood
Westwood Professional Services, Inc.
6200 STONERIDGE MALL ROAD, SUITE 330
PLEASANTON, CA 94588
T: 925.223.8340
westwoodps.com

NO.	DESCRIPTION	DATE	BY	APP. DATE	APP.

7781 WATT AVENUE - SIERRA CREEK COMMUNITY PARK

IMPROVEMENT PLANS

PLANTING PLAN

DATE: 9–1–2026

DRAFTER: TH

DESIGNER: TH

CHECKED: KF

PROJECT NO. 41541

LICENSED LANDSCAPE ARCHITECT
KARIN N. FOLSOM
Signature
03/31/27
Renewal Date
9-1-2026
Date
STATE OF CALIFORNIA

L2.0

SHEET L2.0 OF 13

SACRAMENTO COUNTY, CA

Last Saved by: ALuo
Plot Date: Tue, 09/01/2026 10:04 AM
Drawing: N:_ODE\Pleasanton\41541 NRHPD Sierra Creek Park\Landscape\Const\Plans\Watt Ave IP\41541-WATT-PT

1. LINEAR ROOT BARRIER INSTALLATION. INSTALL 10' O.C.
2. SEE TREE PLANTING DETAIL **4**, THIS SHEET
3. MULCH. SEE PLANTING NOTES
4. ROOT BARRIER: PER PLANTING PLAN LEGEND
5. BACK OF CURB OR WALK

NOTES:

A. ROOT BARRIERS 24 INCHES DEEP AND 20-FEET IN LENGTH CENTERED ON TRUNKS SHALL BE INSTALLED FOR ALL TREES PLANTED WITHIN 5' OF PUBLIC SIDEWALKS AND CURBS PER SACRAMENTO COUNTY STREET IMPROVEMENT STANDARDS SECTION 4-32. ROOT BARRIERS ARE REQUIRED CONTINUOUS AROUND ALL SIDES OF LANDSCAPE AREAS BETWEEN CURB AND SIDEWALK. ROOT BARRIERS SHALL CONFORM TO SECTION 20-2.01 AND 50-43.13 OF THE SACRAMENTO COUNTY TECHNICAL PROVISIONS.

B. FOR ON-SITE TREES, WITHIN 5' OF HARDSCAPE INSTALL ROOT BARRIERS ALONG EDGE OF PAVEMENT BUILDING OR OTHER HARD SURFACES.

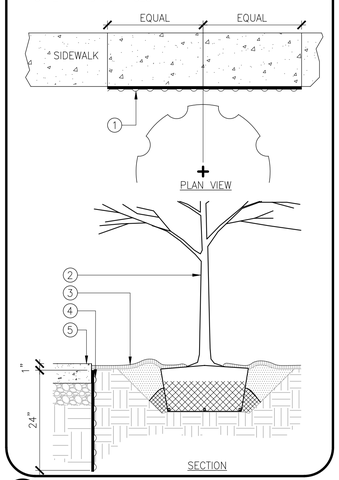

6 ROOT BARRIER DETAIL

NOT TO SCALE

1. EACH TREE SHALL BE PLANTED SUCH THAT THE TRUNK FLARE IS VISIBLE AT THE TOP OF THE ROOT BALL. TREES WHERE THE TRUNK FLARE IS NOT VISIBLE SHALL BE REJECTED. DO NOT COVER THE TOP OF THE ROOT BALL WITH SOIL.
2. 4" HIGH EARTH BERM BEYOND EDGE OF ROOT BALL.
3. SEE PLANTING NOTES FOR SOIL AMENDMENT MIXTURE. AMENDED SOIL MUST NOT BE SO COMPACTED AS TO IMPEDE ROOT GROWTH OR DRAINAGE.
4. REMOVE ALL TWINE, ROPE, WIRE AND BURLAP FROM TOP HALF OF ROOT BALL.
5. 1:1 SLOPE ON SIDES OF PLANTING HOLE. SCARIFY SIDES AND BOTTOM OF PIT.
6. PLACE ROOT BALL ON UNDISTURBED SOIL.
7. FERTILIZER PLANT TABS: 5 PER 15 GAL TREE, 8 PER 24" BOX TREE, 12 PER 36" BOX TREE (IF REQUIRED)
8. TAMP SOIL AROUND ROOT BALL BASE FIRMLY WITH FOOT PRESSURE SO THAT ROOT BALL DOES NOT SHIFT.
9. SET TOP OF ROOT BALL 1"-2" ABOVE SURROUNDING GRADE.
10. NATIVE SOIL
11. MULCH RING 3' DIAMETER MIN., 4' DIAMETER PREFERRED TO A DEPTH OF 3". DO NOT PLACE MULCH IN CONTACT WITH TREE TRUNK. MAINTAIN THE MULCH WEED-FREE DURING THE MAINTENANCE PERIOD.
12. MARK THE NORTH SIDE OF THE TREE IN THE NURSERY, AND ROTATE TREE TO FACE NORTH AT THE SITE.
13. V.I.T. CINCH TIES 32" STRAP OR EQUAL
14. SECURE WITH 1½" GALVANIZED NAIL OR SCREW
15. 2" DIA. X 8' (15 GAL.-24" BOX), 3" DIA. X 10' (36"-48" BOX) UNTREATED LODGEPOLE STAKES OR OTHER APPROVED STAKE MATERIAL. ALL STAKES SHALL BE DRIVEN OUTSIDE THE EDGE OF THE ROOTBALL.

NOTES:

A. DO NOT HEAVILY PRUNE THE TREE AT PLANTING. PRUNE ONLY CROSSOVER LIMBS, CO-DOMINANT LEADERS, AND BROKEN OR DEAD BRANCHES. SOME INTERIOR TWIGS AND LATERAL BRANCHES MAY BE PRUNED; HOWEVER, DO NOT REMOVE THE TERMINAL BUDS OF BRANCHES THAT EXTEND TO THE EDGE OF THE CROWN.
B. FASTEN TIE TIGHT ENOUGH TO KEEP FROM SLIPPING WHILE ALLOWING FOR SOME TRUNK MOVEMENT.
C. REMOVE ALL STAKING AS SOON AS THE TREE HAS GROWN SUFFICIENT ROOTS.
D. TREES WITH POOR QUALITY ROOT BALLS OR ROOT BALLS THAT HAVE BEEN CRACKED OR DAMAGED SHALL BE REJECTED.
E. TREES THAT HAVE GROWN TOO CLOSE TOGETHER IN THE NURSERY, RESULTING IN WEAK TRUNKS SHALL BE REJECTED.

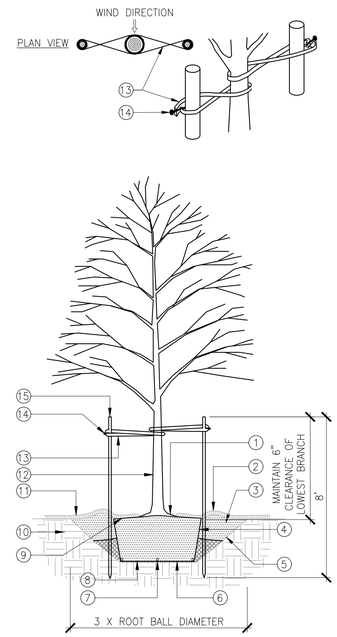

4 TREE PLANTING AND STAKING

NOT TO SCALE

1. CROWN 2" ABOVE GROUND
2. FERTILIZER PLANT TABS: 1 PER 1 GAL, 3 PER 5 GAL
3. BACKFILL MIX (SEE PLANTING SPECS)
4. ROOTBALL
5. SCARIFY BOTTOM OF HOLE

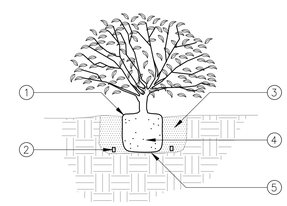

5 SHRUB PLANTING

NOT TO SCALE

1. FINISH GRADE
2. POP-UP WITH ROTARY HEAD (SEE LEGEND FOR TYPE AND MANUFACTURER)
3. ¾" FUNNY PIPE TRIPLE SWING JOINT ASSEMBLY (LENGTH 12" MIN.)
4. PVC SCH 40 TEE (SxSxT) (SIZE PER LATERAL LINE)
5. PVC LATERAL LINE (SEE IRRIGATION PLAN FOR DIA.)

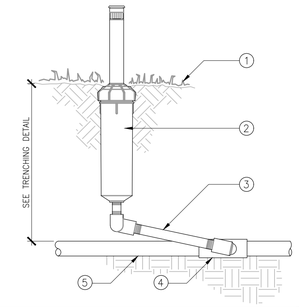

1 POP-UP ROTARY HEAD

NOT TO SCALE

1. FINISH GRADE
2. NATIVE EXCAVATED FILL COMPACTED TO ORIGINAL DENSITY
3. MAIN LINE
4. LOW VOLTAGE WIRING IN CONDUIT
5. LATERAL LINE
6. METALLIC WARNING TAPE

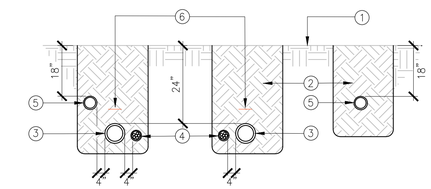

2 IRRIGATION LINE TRENCHING

NOT TO SCALE

1. SAND BACKFILLED TO 95% RELATIVE COMPACTION
2. PAVING
3. LOW VOLTAGE WIRING SLEEVE
4. SCH 40 MAIN LINE SLEEVE
5. SCH 40 LATERAL LINE SLEEVE

NOTE:

A. SIZE AND LOCATION OF SLEEVES PER IRRIGATION PLANS.

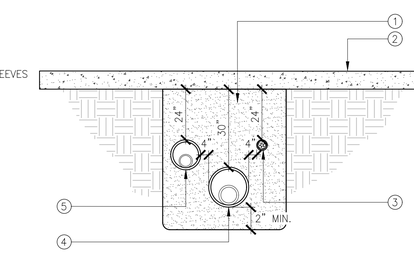

3 SLEEVE INSTALLATION

NOT TO SCALE

Westwood
Westwood Professional Services, Inc.
6200 STONERIDGE MALL ROAD, SUITE 330
PLEASANTON, CA 94588
T: 925.223.8340
westwoodps.com

NO.	DESCRIPTION	DATE	BY	APP. DATE	APP.

7781 WATT AVENUE - SIERRA CREEK COMMUNITY PARK

IMPROVEMENT PLANS

IRRIGATION AND PLANTING DETAILS

DATE: 9-1-2026

DRAFTER: TH

DESIGNER: TH

CHECKED: KF

PROJECT NO. 41541

LICENSED LANDSCAPE ARCHITECT
KAREN N. FOLSOM
Signature
03/31/27
Renewal Date
9-1-2026
Date
STATE OF CALIFORNIA

L3.0

SHEET L3.0 OF 13

SACRAMENTO COUNTY, CA

811 Know what's **below.** **Call** before you dig.

Last Saved by: ALuo
Plot Scale: 1:1 Plot Date: 9/1/2026 10:04 AM
Drawing: N:_ODE\Pleasanton\41541 NRHPD Sierra Creek Park\Landscape\Const\Plans\Watt Ave IP\41541-WATT-DT