October 7, 2026

ADDENDUM NO. 3

PROJECT: Sierra Creek Community Park

This Addendum is hereby incorporated into the project contract documents. It shall be the responsibility of the general contractor to inform any affected sub-bidder of the content of the Addendum.

A. **UPDATE:** The Project Manual Front Ends including the Bid Schedule and Bid Item Descriptions have been revised to reflect the clarifications provided in response to the questions. Changes are highlighted in red.
B. **REVISE:** Electrical engineering plans have been revised.
C. **CHANGE:** Playground and musical equipment will be Owner supplied, Contractor installed.
D. **ADD:** APPENDIX C - Public Restroom Building Subgrade Recommendations.

The following questions have been received by the North Highlands Recreation and Parks District (NHRPD) on or before September 30, 2026.

1. **Restroom Building Seismic Design Criteria**
   The prefabricated restroom plans identify different seismic design parameters than the project Geotechnical Report. Please confirm the governing seismic design parameters for the restroom building and confirm whether the currently provided restroom structural drawings are compatible with the project-specific Geotechnical Report.

NHRPD Response – The engineers calculated based on the 2025 CBC/ASCE seismic provisions information and are approved by the State of California.

2. **Restroom Building Foundation / Slab Responsibility**
   Bid Item F1 includes building pad preparation, foundation/base support, anchorage, and utility connections for the District-provided restroom building. Please confirm whether the Contractor is responsible for furnishing and constructing the complete restroom slab/foundation, including concrete, reinforcement, embeds, anchors, and associated structural work. Please confirm that all such work is to be included in Bid Item F1. The restroom drawings specifically identify a concrete slab requiring a minimum 4,000 psi at 28 days.

NHRPD Response – The concrete slab is furnished with the restroom. The requirements for the foundation and subgrade are supplied by the geotechnical report. PRC supplies and installs

anchors for the building to the prepared foundation. Refer to Appendix C: PRC Subgrade Recommendations along with the recommendations in the geotechnical report.

3. **Off-Site Bid Item C2 – Striping and Pavement Marking**
   The Off-Site Bid Schedule identifies Striping and Pavement Marking as a lump-sum item without an estimated quantity, while the Bid Item Description references payment by linear foot. Please confirm the intended unit of measure and payment basis and provide any applicable estimated quantities.

NHRPD Response – The intended unit of measure is LS. CHANGE unit of measure from Linear Foot to Lump Sum.

4. **Bid item B-8 Signage -** The Off-Site Bid Schedule includes Bid Item B8 – Signage, LS 1; however, a corresponding Bid Item B8 description does not appear to be included in the Off-Site Bid Item Descriptions. Please provide the Bid Item B8 description and clarify the complete scope of signage work to be included in this lump-sum item, including sign types, quantities, posts, foundations, removal/relocation of existing signs, installation requirements, and any other associated work.

NHRPD Response - There is one bus stop sign to be relocated. The Bid Item Description has been updated to clarify the anticipated scope of work.

5. Please confirm if parking lot vertical curbs are to follow county standard type 3 curb detail 4-30/C6.2 or landscape detail 12/L6.0.

NHRPD Response - Confirmed. Please refer to County Standard Detail 4-30 on Sheet C6.2 for parking lot vertical curbs.

6. Site feature #37 is listed as not used in the legend but there is a callout for it pointing to the paving at the culvert. Please confirm that it is not used on this project.

NHRPD Response – Site Feature #37 has been omitted.

7. Reference schedule I lists an existing wall to remain, pointing at the curb islands in the new parking lot. Civils show this as new Type 3 curb. Please confirm if these are supposed to be new curbs or curb & gutter per civil.

NHRPD Response – Per Site Finish Schedule, Callout I in the new parking lot refers to planting areas. Please see Sheet L2.1 or Callout I in the Reference Schedule.

8. Please confirm that no headers are required for Granitecrete path.

NHRPD Response – Confirmed. Granitecrete path shall be installed per Detail 5 on Sheet L6.0.

9. Please confirm width of mowband at gravel maintenance drive. Detail shows 6" while site feature #16 has 12".

NHRPD Response – Width of mow band at gravel maintenance drive shall be 6" and installed per Detail 4 on Sheet L6.0.

10. Please confirm which bid item covers the concrete mowbands at steel fences not along Watt Ave (site feature #25).

NHRPD Response – Site Feature 25 is the 5' high fence at the garden area and is covered by Bid Item C10.

11. Please confirm if the entire steel fence run along Watt Ave (site feature #24) is to have concrete mowband, not just the section on L2.1 that visibly shows the mowband.

NHRPD Response – As indicated in the Site Feature Schedule and Detail, Site Feature #24 includes the mow band.

12. There is a section of what appears to be a concrete mowband around the prefab restroom, with no callouts. Please confirm what this should be.

NHRPD Response – Features located southwest, south, and southeast of the restroom building, offset from the edge of the concrete pad, are concrete mow bands. Please refer to Site Feature #16.

13. Please confirm the width of the play area curbs. Detail 6/L6.0 shows 6", while the overview sheet L2.1 has 12" if scaled.

NHRPD Response – Playground curb adjacent to planting areas shall be installed per Detail 6 on Sheet L6.0.

14. Please confirm detail to be used for bid item C20 vertical curb/retaining wall.

NHRPD Response – Bid Item C20 shall be installed per Detail 12 on Sheet L6.0.

15. Please provide dimensions and extents of slide subslab on this project.

NHRPD Response – Subslab shall be provided for the entire embankment from top of hill to toe of slope, per Detail 2 on Sheet L6.1. Embankment extents per Grading Plan C2.1.

16. Please confirm which bid item covers the retaining walls at the restroom (site feature #43).

NHRPD Response – Site Feature #43 shall be included in Bid Item C4.

17. Please confirm location and extents of colored vehicular paving (site finish K) on this project.

NHRPD Response - The vehicular paving section is a hatched area south of the central circular plaza. Please see snapshot below.

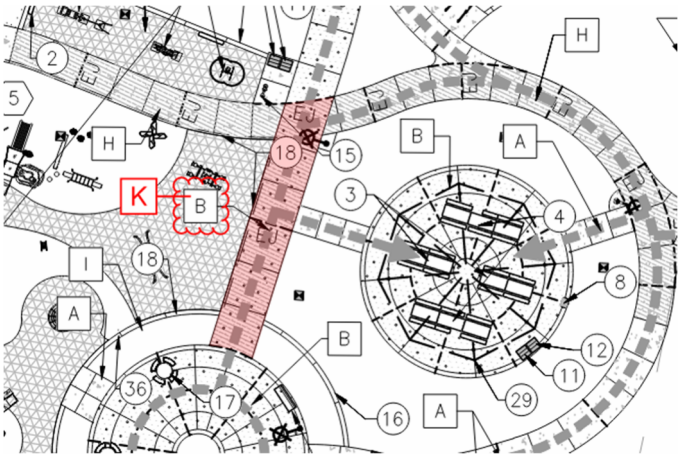

18. Please confirm that the parking lot is to have flow through curb per note 5 on C2.2. LS sheets do not show this. Which bid item covers the flow through curb?

NHRPD Response – Flow through curb shall be installed per Detail C on Sheet C6.1. Bid Item C25 – Flow-Thru Curb has been added to the Bid Schedule and Bid Item Description.

19. Please provide structural detail for bridge abutment wall.

NHRPD Response – Bridge abutment design is a deferred submittal and shall be provided by the Contractor. This engineering is an available service by Bridge Brothers.

20. Note #1 on sheet L1.1 calls for existing wall to be removed. No new wall is shown to replace it. Please confirm demolition of this wall and if any regrading of the slopes around it needs to happen.

NHRPD Response – Existing wall shall be demolished per Note #1 on Sheet L1.1. New finish grades shall be per Grading Plans C2.1–C2.2.

21. For bidding purposes, please provide meadow hydroseed mix.

NHRPD Response – Hydroseed mix to be provided by Pacific Coast Seed, a Native Seed Group Company. Product includes 50% Chapparal Sage Scrub Seed Mix and 50% CA Central Valley Pollinator Mix. Seeding rate per supplier recommendations.

22. Please confirm if future community garden area is to receive any weed control, planting, mulch cover, or soil preparation.

NHRPD Response – Planting, establishment, and maintenance of the Community Garden area is not in Scope.

23. Please provide desired custom park sign model number.

NHRPD Response – Custom park sign model #727S modified (no columns or caps). Please contact Outdoor Creations Inc. per Site Feature Schedule for more information.

24. Please provide dimensions for concrete curb at PIP rubber surfacing next to engineered wood fiber. Which bid item covers this curb?

NHRPD Response – Concrete slab under PIP rubber surfacing transitioning to EWF shall be included in Bid Item E3.

25. Please provide manufacturer and model information for the three musical equipment types (item #11).

NHRPD Response – FreeNotes, Metamorphosis Ensemble, supplied by MRC Recreation. This item is Owner provided, Contractor installed. Please contact MRC Recreation for Playground Feature Schedule on Sheet L2.0 for more information.

26. **Watt Avenue Improvements -** At new landscape median shown in cut section B, please confirm if the existing AC is to be demo-ed to a depth of 6.5" AC/23" AB. What materials are acceptable for backfilling area for planting?

NHRPD Response – Existing pavement and fill to be demolished per Sheet 4 (Watt Avenue Plan Set). Planting shall be installed per Sheet L2.0 (Watt Avenue Plan Set).

27. Please Advise if you would like the *Hands-Free Foot Pedal* option to be included with the 10 Trash & Recycling Receptacles.

NHRPD Response – Trash & Recycling Receptables shall be installed per Detail 7 on Sheet L6.3.

28. Schedule of Values Bid Item H-PLANTING item #4 Trees- 15 Gal from SacTree.- The listed QTY is 147. The QTY should be 145, as the other two are 36" box and are already accounted for on the next SOV line item.

NHRPD Response – Correct. Quantity for Bid Item H4 has been revised to 145.

29. Schedule of Values Bid Item H-PLANTING item #10 Shrubs-5 GAL- The listed QTY is 265. The QTY should be 245 (as covered by 3 line items on sheet L5.0)

NHRPD Response – Correct. Quantity for Bid Item H10 has been revised to 245.

30. Project Manual (Bid Item Description) Bid Item H5 Specimen Trees 48" Box. – This item should be 36" Box, as there are no 48" Box trees on this project.

NHRPD Response – Correct. Bid Item H5 is "Specimen Trees – 36" Box".

31. Please reference plan sheet L6.2. Note C states "Prime and paint 2 coats of black paint" Ameristar fence and gates come as black powder coated. They will not be painted black. Please advise and clarify that powder coated black materials is acceptable (if we are using Ameristar products).

NHRPD Response – It is acceptable to use black powder coated Ameristar fence and gate parts.

32. In the project docs, it mentions a 32 31 19 Decorative metal fence and gates spec. However, I could not find a spec section 32 31 19.

NHRPD Response – Spec section 323119 can be found on Page 293-300.

33. Please reference plan sheet L2.1. Keynote 39 calls out a chain link gate per detail 8/L6.3 of adden 2 plans. What is the height of this gate?

NHRPD Response – Height of new chain link gate shall match existing chain link fence, which appears to be 6' tall.

34. What bid item does the 4' wide chain link gate (per detail 8/L6.3 of adden 2 plans) belong to?

NHRPD Response – Gate shown in Detail 8 on Sheet L6.3 is to be used on an existing fence. Please see Callout 39 on Sheet L2.1.

35. Please clarify if any of the play equipment will be pre-purchased by North Highlands Recreation & Park District and the direct playground product costs (Including taxes and freight) will NOT need to be included. This includes items from MRC Recreation and Landscape Structures.

Please also clarify if these (owner-provided) purchases were previously accounted for in the Engineers Estimate.

NHRPD Response – All play equipment will be provided by NHRPD. The Engineers' Estimate DID include the cost for this equipment of $300,000.

36. Play Equipment item entitled ***64" Rollerslide*** has been deemed as out-dated from Landscape Structures (LSI). No quotes will be given for this item. Please clarify the need for this requirement and advise if this item is coming from another vendor.

NHRPD Response – The Rollerslide is provided by MRC and will be Owner provided, Contractor installed.

37. Play Equipment item entitled ***Musical Equipment*** per the legend on L2.0 – Can you please clarify which vendor is supplying this?

NHRPD Response – Musical equipment will be provided by NHRPD. Musical equipment has been coordinated with MRC Recreation.

38. The file entitled ***NHRPD Sierra Creek CP Project Bid Set Revised.pdf*** (Found on nhrpd.org) does not include a date. This file is 569 pages and includes more plan pages. There are no updates within the descriptions of any of these updated plans, including the covers. Please clarify at which stage this file was issued. Are these all revisions after Addendum 2? Or before? Please clarify the intention of this file.

NHRPD Response – This file was uploaded as a part of Addendum 2. The Technical Specifications were added to the set.

39. Since there has been so many different copies and duplicates of the bid-set pages, can you also please issue ONE final set of Bid-plans to help ensure a level playing field?

NHRPD Response –The Technical Specification and Plans have not been revised. The Bid Form, Bid Descriptions and an Appendix C are included in this Addendum. A conformed set will be provided upon award of the bid.

40. Addendum 2 Question # 26 – This unit of measurement was not corrected on the schedule of values sheet included in Addendum 2 (Project Manual). The response from NHRPD indicated this should be changed. Please clarify if it is the contractor's responsibility to modify their own schedule of values forms.

6	Type 1A Curb	LS	105

NHRPD Response – Bid Schedule quantities and/or unit of measures is updated. A revised Bid Schedule is included in this Addendum.

41. Addendum 2 Question # 25 – This unit of measurement was not corrected on the schedule of values sheet included in Addendum 2 (Project Manual). The response from NHRPD indicated this should be changed, but hard to tell from the response given. Please clarify if it is the contractor's responsibility to modify their own schedule of values forms.

5	Tree Protection	LS	1

NHRPD Response – Bid Schedule quantities and/or unit of measures is updated. A revised Bid Schedule is included in this addendum.

42. Schedule of Values Bid Item H-PLANTING item #4 **Trees- 15 Gal from SacTree**. The project manual from Addendum 2 does not make mention of the **SacTree** inclusion, but states we are to furnish. Please clarify the inclusion of **SacTree**. Are they a vendor that will be providing (free of charge) all 15Gal trees for the on-site and off-site portions of work?

Bid Item H4 - Trees - 15 Gal from SacTree: **Bid Item D2 - Trees - 15 Gal from SacTree:**

NHRPD Response – Sacramento Tree Foundation, a local non-profit, has agreed to provide 15-gallon trees. See more at https://sactree.org.

43. Schedule of Values Bid Item F-STRUCTURES #3 **Shade Structures including Installation** - Please clarify if the 3 Shade Structures will require Deferred Submittal coordination from the contractor. The final plans will need to be updated to the current 2025 CBC.

NHRPD Response – All three shade structures have been designed and coordinated. Deferred Submittal is not required for these three shade structures.

44. Onsite bid schedule C, you have a blank line between #10 and #11. Was that a missing item?

NHRPD Response – Please omit blank link between #10 and #11 on the Bid Schedule.

45. The offsite schedule has a bid item for Mobilization, but the onsite bid schedule does not. Please add an onsite Mobilization bid item.

NHRPD Response – Mobilization is included as a Bid Item for onsite work. Please see item J2.

46. Please clarify whether the required pressurized irrigation mainline pipe size is 2" Schedule 40 PVC (per Sheet L4.0) or 1-1/2" Schedule 40 PVC (per Sheet L4.1)

NHRPD Response – Please refer to Irrigation Legend on Sheet L4.0 for mainline size. Mainline shall be 2" per Drawings.

47. If 1-1/2" Schedule 40 PVC is the intended mainline size, please confirm if 2" Schedule 80 fittings and isolation valves are still required at the POC assembly prior to reducing to 1-1/2".

NHRPD Response – Please refer to Irrigation Legend on Sheet L4.0 for mainline size. Mainline shall be 2" per Drawings.

48. Will Sacramento County plan review and permit fees for the required Deferred Submittals (Pedestrian Bridge Abutment Foundations, Playground Footing Calculations, and Electrical Plans) be paid directly by the District, or must the Contractor include all County permit/plan check fees in the lump sum bid prices for Bid Items E1, F2, and G1?

NHRPD Response – Permit and plan check fees will be paid by NHRPD. The Contractor is responsible for all work set forth in the Bid Item Description.

49. Please confirm that Sacramento County Department of Transportation will issue the Encroachment Permit for Watt Avenue street improvements and traffic signal modifications at no cost to the Contractor, and that no additional inspection or utility connection fees apply to Off-Site Bid Items B1–B7 and C1.

NHRPD Response – All required encroachment permits shall be coordinated by Contractor. Encroachment permit application fees will be paid by NHRPD.

50. The plans call for (3) type S5 fixtures but there is no S5 fixture on the schedule. Please provide the fixture information/specification.

NHRPD Response – Please see revised Electrical Site Plans.

51. The new service pedestal is labeled "PS" and refers to Detail 1 on D-1. However, the single-line diagram labels the pedestal "SP" and does not reference a detail. Is the service pedestal intended to be the same detail as the distribution pedestal "P"?

NHRPD Response – Please see revised Electrical Site Plans.

52. On E1.2, the SMUD primary conduit is shown tying into the existing pull box approximately 380' away, in front of the well. Is the pull box shown below the correct one? If so, can the driveway be sawcut to install the conduit?

NHRPD Response – Please see revised Electrical Site Plans.

53. **Irrigation -** Detail 1 on sheet L7.0 is for a pedestal installed controller and not a wall mount one? please provide correct detail and confirm if the irrigation controller is wall mount per irrigation legend on sheet L4.0.

NHRPD Response – Irrigation controller shall be wall-mounted inside utility storage room in the new restroom building per Irrigation Legend on Sheet L4.0. See detail below.

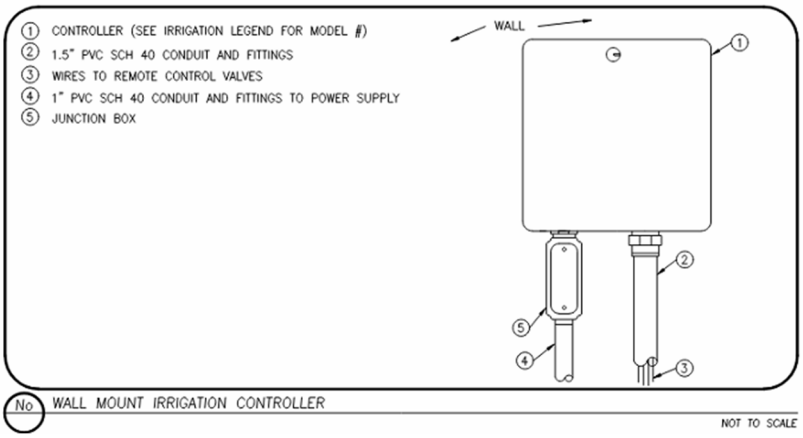

54. **Irrigation -** This new wall mounted irrigation controller hunter ACC2 comes in different material either grey steel A2C-1200-M, Plastic A2C-1200-P, and or Stainless steel A2C-1200-SS? The contractor needs to know exactly which one is required as it varies in price.

NHRPD Response – Wall-mount irrigation controller shall be gray metal.

55. **Bid Item F1 – Restroom Base Preparation, Foundation and Utility Scope** Bid Item F1 – Base Preparation for Pre-Fab Restroom Building and Utility Connections includes building pad preparation, subgrade preparation and compaction, aggregate base, foundation/base support, anchorage, extension of utilities to within 5 feet of the restroom building, and final utility connections. The prefabricated restroom drawings additionally indicate that the slab is to be constructed onsite by others and provide structural slab, reinforcement, aggregate base, plumbing, electrical, anchorage, and site-installed footing requirements.
    Please also clarify the intended division of utility scope between F1 and Bid Items B1 – Domestic Water Service to Building, B3 – Sewer Line Connection, and G2 – Service to Building, to avoid duplicate pricing.
    Additionally, Bid Item F1 requires utilities to be extended to within 5 feet of the building, while the prefabricated restroom drawings indicate water, sewer, and electrical utility boxes within 6 feet of the building. Please confirm the required utility termination location

NHRPD Response - The intent is for Bid Item B1 to include the utilities installed up to 5'-6' of the building. Bid Item F1 is for the final connection to be made to the restroom building utilities. PRC will excavate the subgrade prepared by the contractor, to take utilities to the P.O.C. outside of the building footprint. All conduit and plumbing will be connected inside of the building by PRC. Connections for utilities at the P.O.C. are the responsibility of others. Refer to Appendix C-PRC Subgrade Recommendations

56. **Electrical -** Bid item G1 describes a 400A, 120/208V, 3-phase, 4-wire service. Sheet E3.2 shows a 200A service pedestal (200A bus, 200A/3P main, 22 kAIC) with a 4 #4/0 feeder. The E3.2 pedestal schedule also calculates MAX PHASE @125% = 251.9A, which is over the 200A bus rating. Please confirm the required service size and pedestal rating.

NHRPD Response -See addendum drawing for clarification of pedestal type(s).

57. **Electrical -** E3.1 detail 3 specifies a Blink IQW2-80U-M1-R2-N-25 dual-port charger rated 80A, 208V, 15.4 kW per port. E1.1 note 7 describes a dual 7.2 kW charger fed with 2" C, 4 #6 Cu, and the pedestal schedule shows (2) 40A/2P breakers. An 80A-per-port charger needs 100A/2P circuits and larger conductors. Which governs — an 80A-per-port charger (with revised breakers, conductors and service capacity), or a 7.2 kW (32A) per-port charger on the 40A circuits shown?

NHRPD Response -Revise the Blink charger to a #101-000627A (Series 7, Dual 48A) dual port, 10kW per port derate to 6.6kW,

58. **Electrical -** The prefabricated restroom panel (Blazer E-1) is 120/240V single-phase, and the tankless water heaters are rated 3.3 kW at 240V. The site service is 120/208V 3-phase, fed from a 100A/2P breaker (3 #2). E1.2 note 8 also calls the panel 120/240V. At 208V the heaters will deliver about 75% of rated output. Should the building be ordered with 208V equipment, or is a transformer/buck-boost required, and by whom?

NHRPD Response - Electrically and mechanically the system will function.

Electrical - Bid item G5 lists 9 EA of parking lot lighting. E1.1, E2.1 and the E2.2 fixture schedule show 12 poles (6 P14HH, 3 P14H, 3 P14L). Please confirm the quantity to be used for G5.

NHRPD Response -See addendum drawing for updated fixture schedule with appropriate pole identification.

59. **Electrical -** Three type "S5" pathway post tops are shown on E1.2 and E2.2, but S5 is not listed in the E2.2 fixture schedule (only S2 and S3). Please provide the S5 catalog number.

NHRPD Response -See addendum drawing for updated fixture schedule with appropriate pole identification.

60. **Electrical -** E1.2 note 1 calls for the transformer pad, bollards and 4" primary conduit "per SMUD drawings." The SMUD design is not in the bid documents. Please provide the SMUD

drawings (pad type, primary route and conduit count, bollard layout, secondary requirements) and the status of the SMUD application. Please also confirm that SMUD fees and charges are paid by the District.

NHRPD Response -SMUD drawings are being finalized while we are out to bid. District will cover SMUD fees and chargers.

61. **Electrical -** The pedestal schedule includes 6 future EV chargers (#3–#8) with 40A/2P breakers, and E1.1 shows 6 "FUTURE EV" spaces, but only 4 conduit stubs (note 6) are shown. How many future EV stubs are required for bid item G8?

NHRPD Response -There are a total of 6 EVCS stalls for the 6x spare breakers, but only 4 conduits as 2 of the locations will share 2 feeders in the same conduit.

62. **Electrical -** E3.2 asks for an astronomical clock to control the (N) monument sign, but no circuit or conduit to the sign is shown. Is the sign illuminated, and if so, please show the circuit and routing.

NHRPD Response-Revise note to read lighting circuits for which there are two, one for the parking lot and other for pathway lights.

63. **Electrical -** E1.2 labels the service pedestal "PS" and references detail 1/D-1 (no sheet D-1 is in the set). E3.2 labels it "SP," and the pedestal schedule titled "SP" carries the EV and parking-lot loads that E1.1 feeds from pedestal "P." Please confirm there are two pedestals — SP (metered service: 200A main, 100A/2P to Panel R, feeder to P) and P (200A distribution with the scheduled circuits).

NHRPD Response- See addendum drawing for clarification of pedestal type(s).

64. **Electrical -** E1.2 note 9 calls for a 2" conduit for the building feeder; the E3.2 single line shows 1-1/2" C with 3 #2 + #8 G. Please confirm.

NHRPD Response-Follow single line diagram for 1 1/2" conduit.

65. **Electrical -** E1.1 notes 10 and 16 route the 3" feeder and a lighting circuit along the underside of the prefabricated pedestrian bridge in RMC. Please confirm that the bridge manufacturer will provide conduit hangers/attachment points and expansion provisions at the abutments, or provide an attachment detail.

NHRPD Response -For purposes of bidding I would assume a 12” piece of B-Line B42 strut attached to the lower HSS chord of the bridge with 3/8” square U-bolt sized to match the HSS

tube steel's dimensions. Locate on the inside of beam under walkway out of view at 120" max centers and within 24" of coupling. Attach conduit to strut with pipe clamps.

66. **Electrical -** E3.1 calls for pole finish "per Owner." Please state the color and finish for Type P and Type S poles.

NHRPD Response -Provide black finish for all pole types.

67. **Watt Ave Plans-** The bid set includes TS-1 (Traffic Signal Modification Plan) and TS-1 (Notes and Details), both stamped PRELIMINARY, and SS-1 marked sheet 3 of 3. Addendum 2 Q30 refers to sheets TS-1 and TS-2. Please issue the complete, County-approved traffic signal set.

NHRPD Response - County approval is underway and pending Sacramento Metro Fire approval.

68. **Electrical -** Several G-item descriptions include "permits, fees," while Addendum 2 Q17 states the District has paid or will pay all permitting, testing and plan-check fees. Please confirm that electrical permit fees and SMUD/utility fees and charges are excluded from the contractor's bid.

NHRPD Response- Confirmed.

Note: If your bid has already been submitted and, because of this ADDENDUM, you wish to modify your offer, you may do so by re-submitting your bid. Please make sure your amended bid refers to this ADDENDUM and is received prior to the Bid Opening.

End of addendum items

All other items of work in the contract documents remain unchanged.

IMPORTANT – If submitting an amended bid, the bidder shall sign and include this form in the sealed bid package.

I hereby acknowledge that I have received, read, and understand the items discussed in this **Addendum No. 3.**

Firm Name: _____

Signed: _____

Date: _____

PROJECT MANUAL

Sierra Creek Community Park

7781 Watt Ave

Antelope, Sacramento County, CA 95843

North Highlands Recreation and Park District

6040 Watt Ave

North Highlands, CA 95660

TABLE OF CONTENTS

GENERAL AND SPECIAL PROVISIONS

1 BIDDING REQUIREMENTS 1-8

1.1 INVITATION TO BID 1-8

1.2 BID 1-10

1.3 BID SCHEDULE (ON-SITE WORK) 1-12

NOTE: "TOTAL BASE BID" IS INCLUDED ON THE NEXT PAGE. 1-14

BID SCHEDULE (OFF-SITE WORK) 1-15

1.4 DESIGNATION OF SUBCONTRACTORS 1-16

1.5 BID BOND 1-19

1.6 EXPERIENCE QUALIFICATIONS 1-21

1.7 NONCOLLUSION DECLARATION TO BE EXECUTED BY BIDDER AND SUBMITTED WITH BID (PUBLIC CONTRACT CODE SECTION 7106) 1-23

1.8 ACKNOWLEDGMENT OF INSURANCE AND BONDING REQUIREMENTS 1-24

1.9 IRAN CONTRACTING ACT CERTIFICATION 1-25

2 CONTRACT FORMS 2-1

2.1 CONTRACT 2-1

2.2 FAITHFUL PERFORMANCE BOND 2-3

2.3 PAYMENT BOND 2-6

2.4 CONTRACTOR'S WORKERS' COMPENSATION CERTIFICATE (LABOR CODE SECTION 1861) 2-9

3 ABBREVIATIONS AND DEFINITIONS 3-1

3.1 ABBREVIATIONS 3-1

3.2 DEFINITIONS 3-3

4 INSTRUCTIONS TO BIDDERS 4-1

4.1 INTRODUCTION 4-1

4.2 PLANS 4-1

4.3 LOCAL CONDITIONS 4-1

4.4 FORM OF BID AND SIGNATURE 4-3

4.5 SUBMISSION OF BIDS 4-3

4.6 PREPARATION OF THE BID 4-3

4.7 BID GUARANTEE 4-4

4.8 LIST OF SUBCONTRACTORS; SUBCONTRACTING LIMITS 4-4

4.9 INTERPRETATION OF CONTRACT DOCUMENTS 4-5

4.10 MODIFICATION OF BIDS 4-5
4.11 WITHDRAWAL AND RETURN OF BIDS 4-5
4.12 DISCREPANCIES 4-5
4.13 SERVICING AND MAINTENANCE 4-5
4.14 DISQUALIFICATION OF BIDDERS 4-6
4.15 AWARD OF CONTRACT 4-6
4.16 CONTRACT BONDS 4-6
4.17 EXECUTION OF CONTRACT 4-7
4.18 RETURN OF BID GUARANTEES 4-7
4.19 POWER OF ATTORNEY 4-7
4.20 TIME OF COMPLETION 4-8
4.21 LICENSING REQUIREMENTS FOR CONTRACTORS 4-8
4.22 PREVAILING WAGES 4-8
4.23 BID PROTEST 4-8
4.24 INELIGIBLE CONTRACTORS AND SUBCONTRACTORS 4-9
4.25 AUDIT OF BID DOCUMENTS 4-9
4.26 SUBSTITUTIONS DURING BIDDING 4-9
5 GENERAL CONDITIONS 5-1
5.1 INTENT OF CONTRACT DOCUMENTS/MEANS AND METHODS 5-1
5.2 CONTRACTOR'S UNDERSTANDING 5-1
5.3 CHANGES IN THE WORK 5-2
5.4 ADJUSTMENTS FOR PRICE INCREASES 5-5
5.5 CLAIMS AND RESOLUTION OF DISPUTES 5-6
5.6 GUARANTEE 5-12
5.7 AUTHORITY OF THE ENGINEER 5-13
5.8 DRAWINGS 5-13
5.9 CONSTRUCTION STAKING AND SURVEYS 5-15
5.10 PERMITS AND REGULATIONS 5-15
5.11 CONFORMITY WITH CONTRACT DOCUMENTS 5-15
5.12 COORDINATION & INTERPRETATION OF CONTRACT DOCUMENTS 5-16
5.13 SUBCONTRACTS 5-16
5.14 COOPERATION OF CONTRACTORS 5-17
5.15 SUPERINTENDENCE 5-17
5.16 INSPECTION OF WORK 5-17
5.17 TESTS 5-19

5.18 REMOVAL OF REJECTED/UNAUTHORIZED WORK AND MATERIALS 5-20
5.19 DEDUCTIONS FOR UNCORRECTED WORK.....5-20
5.20 EQUIPMENT AND PLANTS.....5-20
5.21 CHARACTER OF WORKER.....5-21
5.22 SEPARATE CONTRACTS.....5-21
5.23 MATERIALS.....5-21
5.24 STORAGE OF MATERIALS; STORAGE AREAS.....5-22
5.25 TRADE NAMES AND ALTERNATIVES.....5-22
5.26 CERTIFICATES OF COMPLIANCE.....5-22
5.27 CERTIFICATES OF REPORTED COMPLIANCE 5-23
5.28 ASSIGNMENT.....5-23
5.29 DISTRICT ENTRY ON WORKSITE; RIGHT TO OPERATE UNSATISFACTORY EQUIPMENT OR FACILITIES.....5-23
5.30 LANDS FOR WORK; RIGHTS OF WAY; CONSTRUCTION ROADS; TEMPORARY UTILITY SERVICES.....5-24
5.31 PROGRESS SCHEDULE 5-25
5.32 COMMENCEMENT AND PROGRESS OF THE WORK AND TIME OF COMPLETION; CONSTRUCTION SEQUENCE.....5-25
5.33 DELAYS.....5-26
5.34 EXTENSIONS OF TIME.....5-27
5.35 DELAY DAMAGES 5-28
5.36 SUSPENSION OF WORK.....5-29
5.37 TERMINATION FOR DEFAULT; DAMAGES FOR DELAY; TIMELY EXTENSION 5-30
5.38 RIGHTS OF DISTRICT UPON TERMINATION 5-32
5.39 FAILURE TO COMPLETE THE WORK IN THE TIME AGREED UPON; LIQUIDATED DAMAGES 5-33
5.40 CLEAN UP.....5-33
5.41 COMPLIANCE WITH LAWS; PERMITS; TAXES.....5-34
5.42 PREVAILING WAGE PENALTIES; WAGE CLAIMS PROHIBITED 5-35
5.43 LABOR DISCRIMINATION.....5-35
5.44 EIGHT HOUR DAY LIMITATION; CERTIFIED PAYROLL REPORTS.....5-35
5.45 EMPLOYMENT OF APPRENTICES 5-36
5.46 WATER POLLUTION.....5-37
5.47 PATENTS.....5-38
5.48 USE OF ARTIFICIAL INTELLIGENCE 5-39

5.49 PUBLIC CONVENIENCE 5-39
5.50 UNDERGROUND UTILITIES 5-40
5.51 SAFETY AND TRENCHING 5-40
5.52 PROTECTION OF PERSON AND PROPERTY 5-43
5.53 HAZARDOUS MATERIALS; HAZARD COMMUNICATION 5-44
5.54 RESPONSIBILITY FOR REPAIR OF FACILITIES 5-45
5.55 DISTRICT'S REPAIR 5-45
5.56 CONTRACTOR'S LICENSE NOTICE 5-46
5.57 PUBLIC WORKS CONTRACTOR REGISTRATION 5-46
5.58 INSURANCE 5-46
5.59 INDEMNITY AND DEFENSE OBLIGATION 5-49
5.60 PROTECTION OF WORK 5-50
5.61 ACCIDENTS 5-52
5.62 NO PERSONAL LIABILITY 5-53
5.63 MEASUREMENT OF QUANTITIES 5-53
5.64 SCOPE OF PAYMENT 5-53
5.65 PROGRESS ESTIMATE 5-53
5.66 PROGRESS PAYMENTS 5-54
5.67 COMPLETION AND FINAL ACCEPTANCE 5-58
5.68 FINAL PAYMENT 5-60
5.69 FINAL RELEASE 5-60
5.70 RIGHT TO WITHHOLD PAYMENTS 5-63
5.71 WAIVER OF INTEREST 5-63
5.72 SATISFACTION OF CLAIMS AND LIENS 5-63
5.73 ASSIGNMENT OF ANTI-TRUST CLAIMS 5-64
5.74 AVAILABILITY AND AUDIT OF INFORMATION 5-64
5.75 INTEGRATION 5-65
5.76 COUNTERPARTS AND ELECTRONIC SIGNATURES 5-65
5.77 WAIVER 5-65
5.78 REMEDIES NOT EXCLUSIVE 5-65
5.79 SEVERABILITY 5-65
5.80 GOVERNING LAW AND VENUE 5-65
5.81 NOTICES 5-66

6 SPECIAL PROVISIONS 6.1
PROPOSITION 68 - STATE PARKS GRANT REQUIREMENTS 6-1
BID ITEM DESCRIPTIONS (ON-SITE) 6-3
BID ITEM DESCRIPTIONS (ON-SITE) 6-20

GENERAL REQUIREMENTS AND TECHNICAL SPECIFICATIONS

DIVISION 01 – GENERAL REQUIREMENTS
SECTION 011100 – SUMMARY ..... 1 - 4
SECTION 012500 – SUBSTITUTION PROCEDURES ..... 1 - 3
SECTION 013100 – PROJECT MANAGEMENT AND COORDINATION ..... 1 – 10
SECTION 013300 – SUBMITTAL PROCEDURES ..... 1 - 9
SECTION 014000 – QUALITY REQUIREMENTS ..... 1 - 11
SECTION 015000 – TEMPORARY FACILITIES AND CONTROLS ..... 1 - 9
SECTION 015639 – TEMPORARY TREE AND PLANT PROTECTION ..... 1 - 8
SECTION 016000 – PRODUCT REQUIREMENTS ..... 1 - 7
SECTION 017419 – CONSTRUCTION WASTE MANAGEMENT ..... 1 - 7
SECTION 017700 – CLOSEOUT PROCEDURES ..... 1 – 6
SECTION 017823 – OPERATION AND MAINTENANCE DATA ..... 1 - 8
SECTION 017839 – PROJECT RECORD DOCUMENTS ..... 1 - 5
DIVISION 02 – EXISTING CONDITIONS
SECTION 024119 – SELECTIVE DEMOLITION ..... 1 - 7
DIVISION 03 – CONCRETE
SECTION 033000 – CAST-IN-PLACE CONCRETE ..... 1 – 18
SECTION 032000 – CONCRETE REINFORCING ..... 1 - 5
DIVISION 04 – 10
NOT USED
DIVISION 11 – EQUIPMENT
SECTION 116800 – PLAY EQUIPMENT AND STRUCTURES 1- 5
DIVISION 12 - 30
NOT USED
DIVISION 31 – EARTHWORK
SECTION 311000 – SITE CLEARING 1- 7
DIVISION 32 – EXTERIOR IMPROVEMENTS
SECTION 321313 – CONCRETE PAVING ..... 1 – 13

SECTION 321373 – CONCRETE PAVING JOINT SEALANTS ..... 1 - 5
SECTION 321816.13 – PLAYGROUND PROTECTIVE SURFACING ..... 1 – 6
SECTION 323119 – DECORATIVE METAL FENCES AND GATES ..... 1 - 8
SECTION 323300- SITE FURNISHINGS..... 1 - 9
SECTION 328400 – PLANTING IRRIGATION ..... 1 – 14
SECTION 329113 – SOIL PREPARATION ..... 1 - 12
SECTION 329200 – TURF AND GRASSES ..... 1 - 9
SECTION 329300 – PLANTS ..... 1 - 14
DIVISION 33 – 48
NOT USED

APPENDICES

A. GEOTECHNICAL EXPLORATION REPORT
B. AGRONOMIC SOILS REPORT
C. PUBLIC RESTROOM BUILDING SUBGRADE RECOMMENDATIONS

1 BIDDING REQUIREMENTS

1.1 INVITATION TO BID

Sealed proposals will be received at the office of the North Highlands Recreation and Park District, located at North Highlands Recreation and Park District, 6040 Watt Ave, North Highlands, CA 95660, until 2:00 p.m. local time on October 8, 2026 or such later date as may be set by addendum, and then will be publicly opened and read for the construction of the following public works project:

> Sierra Creek Community Park (Park Site) - Scope of work including but not limited to: construction of a new community park with play equipment, shade shelters, picnic areas, picnic tables and BBQs, a parking lot with electric vehicle charging stations, a space for a community garden, fencing, planting and irrigation, restroom building, power and lighting, and pedestrian bridge over the existing Sierra Creek in the park.
>
> Watt Avenue Street Improvements (Off-Site) - Scope of work for off-site improvements includes but not limited to: Construction of U-Turn Lane, asphalt pavement, curbs, gutters and sidewalks, driveways and median improvements including landscape, traffic signal modification and striping.

The contract documents for the Project, including the public works construction contract, instructions to bidders, bid forms, plans and specifications, may be examined at the District office, with prior notice to the District's representative, located at 6040 Watt Ave, North Highlands, CA 95660. Bidders must comply with the Instructions to Bidders.

The District will hold a pre-bid conference at the District Office, 6040 Watt Avenue, North Highlands, CA on September 17, 2026, at 2:00 p.m. It is suggested that each prospective bidder review the bid documents and project site prior to the pre-bid conference. Each prospective bidder shall be required to attend the pre-bid conference. Bids from any bidder not attending this conference will be rejected as non-responsive.

Each Bid must be submitted on the prescribed forms and accompanied by cash, a cashier's check, certified check or bid bond executed on the prescribed form payable to the District in an amount not less than 10 percent of the amount bid.

Bidders shall submit prices for both the On-Site Work and the Off-Site Work. The Total Base Bid shall be the sum of the Base Bid, On-Site Only, and the Base Bid, Off-Site Only (See Section 1.3 and 1.4 of the Bidding Requirements). Award, if made, will be made to the lowest responsive responsible bidder based on the Total Base Bid. The Contract Price shall include both the On-Site Work and the Off-Site Work.

The successful bidder will be required to furnish a payment bond and faithful performance bond each in the full amount of the Contract price, and insurance with certificates and endorsements of insurance, as provided in the Contract Documents. The required bonds must be provided only by a surety insurer who is admitted to do business by and in good standing with the California Department of Insurance.

Bidders are hereby notified that in accordance with Public Contract Code section 22300, securities may be substituted for any monies that the District may withhold pursuant to the terms of this Contract to ensure performance.

The successful bidder must possess the following classification or type of contractor's license issued by the Contractors State License Board: Class A, California.

To be qualified to bid on this Project, bidders must be registered and qualified to perform public work with the Department of Industrial Relations pursuant section 1725.5 of the Labor Code. All subcontractors listed in a qualified bidder's bid as performing any portion of the work also must be registered and qualified with the Department of Industrial Relations.

Prior to award of the Contract, the successful Bidder shall submit to the Agency copies of valid Certificates of Reported Compliance, as described in section 2449(i) and 2449(n) of Title 13 of the California Code of Regulations, for the fleet selected to perform such work proposed in the bid. If applicable, subcontractors must submit copies of valid Certificates of Reported Compliance, as well. If the successful bidder does not submit the necessary Certificates of Reported Compliance, the bid will be disqualified.

Bids that equal or exceed $1,000,000 must be accompanied by an Iran Contracting Act certification in the form provided in section 1.9.

The attention of bidders is directed to the requirements and conditions of employment to be observed and prevailing wage rates to be paid to all workers employed under the Contract in accordance with Labor Code sections 1770 and following. Copies of the prevailing rate of per diem wages are on file at the District's office and will be made available to any interested party on request. In accordance with Labor Code section 1771.4(a)(1), this project is subject to compliance monitoring and enforcement by the Department of Industrial Relations.

This project is subject to special funding conditions set forth in section 6.

The District reserves the right to reject all bids. Any bid not conforming to the intent and purpose of the Contract Documents may be rejected. The District may extend the time to award the Contract.

Dated: _____

North Highlands Recreation and Park District

By: _____

Scott Graham, District Administrator

1.2 BID

TO: North Highlands Recreation and Park District, 6040 Watt Ave, North Highlands, CA 95660

The undersigned states and declares as follows:

That the Bidder has carefully examined the location of the proposed work; that the Bidder has examined the Contract Documents entitled: Sierra Creek Community Park; that the Bidder has read the accompanying Instructions to Bidders; that the Bidder hereby proposes to begin work and complete the project in accordance with the schedule and deadlines in the Contract Documents; that the Bidder hereby proposes to furnish all labor, materials, tools, and equipment, and to perform all work required, complete in place, in compliance with all terms and condition and requirements of the Contract Documents; and that the Bidder will take in full payment for the work the prices set forth in the accompanying bid schedule.

The Bidder acknowledges that the following quantities are approximate only, being given as a basis for the comparison of proposals, that the District does not expressly or by implication agree that the actual amount of the work will correspond therewith, and that the District reserves the right to increase or decrease the amount of any class or portion of the work, as may be deemed necessary or advisable by the Engineer.

The following surety or sureties have agreed to furnish payment and faithful performance bonds to the Bidder if it is awarded the contract:

Name of Performance Bond Surety: _____

Name of Payment Bond Surety: _____

BIDDER INFORMATION

Bidder Name: _____

Type of Business Entity and State of Incorporation (e.g., corporation, limited liability company, partnership): _____

Contractor's License No.: _____

DIR Public Works Contractor Registration No.: _____

Expiration Date: _____

Type of license: _____

Name under which license is held: _____

Status of license: _____

The Bidder's authorized officer identified below hereby declares that the representations in this Bid are true and correct and of my own personal knowledge, and that these representations are made under penalty of perjury under the laws of the State of California.

Authorized Signature: _____

Printed Name: _____

Title: _____

Date: _____

Address: _____

_____

Phone: _____

Fax: _____

Email: _____

1.3 BID SCHEDULE (ON-SITE WORK)

Item No.	Item	Unit of measure	Estimated quantity	Unit price (in figures)	Item total (in figures)
A - SITE PREPARATION					
1	Demolition / Clear and Grub	SF	261,300		
2	Erosion Control	AC	6		
3	Site Grading (Rough/Fine)	SF	150,000		
4	Tree Removal	EA	1		
5	Tree Protection	LS	1		
6	Construction Fencing	LF	2,200		
7	Removal of Existing Planter Wall	LS	1		
8	Removal of Existing Signage and Metal Bollards	LS	1		
B - UTILITIES					
1	Domestic Water Service to Building	LS	1		
2	Domestic Water Service tie-in to street	EA	1		
3	Sewer line connection	Allow	1		
4	Drinking Fountain hookups	EA	2		
5	Storm Drainage Infrastructure	LS	1		
C - HARDSCAPE					
1	Asphalt Pavement for Parking Lot with Aggregate Base	SF	19,510		
2	GraniteCrete Pathway (w/ Aggregate Base)	SF	6,386		
3	Concrete Seatwalls (at Entry Plaza)	LF	20		
4	Colored Concrete Retaining Walls (at Amphitheater)	LF	130		
5	Concrete Pavement (w/ Aggregate Base)	SF	12,250		
6	Concrete Pavement - Vehicular (w/ Aggregate Base)	SF	2,400		
7	Colored Concrete Pavement (aggregate Base)	SF	7,120		
8	Colored Concrete Pavement - Vehicular (w/ Aggregate Base)	SF	620		
9	Concrete Playground Edge	LF	500		
10	Ornamental Metal Fence-60" ht	LF	297		
11	Ornamental Metal Fence-48" ht	LF	626		
12	Ornamental Pedestrian Gates-60	EA	1		
13	Ornamental Vehicular Gates-60"	EA	1		
14	12" Concrete Mow Band	LF	1,197		
15	18" Concrete Mow Band under Fence (along Watt Ave)	LF	294		
16	Parking Lot Striping	LS	1		
17	Concrete Wheel Stop	EA	48		
18	Gravel Service Drive (at Garden)	SF	510		
19	ADA Curb Ramp with Truncated Domes (CalTrans Case C)	EA	2		
20	Vertical curb / Retaining wall	LF	66		
21	Culvert Feature	LF	40		

Item No.	Item	Unit of measure	Estimated quantity	Unit price (in figures)	Item total (in figures)
22	Prop 68 Signage	EA	1		
23	6" Curb with Handrail	LF	30		
24	6" Vertical Curb	LF	1,260		
25	Flow-Thru Curb	LF	335		
D – FURNISHINGS / EQUIPMENT / STRUCTURES					
1	Bench - Backed - Outdoor Creations	EA	7		
2	Bench - Backless - Outdoor Creations	EA	6		
3	Trash and Recycling Receptacles	EA	10		
4	Picnic Table - (Accessible) - Outdoor Creations	EA	3		
5	Picnic Table - (Standard) - Outdoor Creations	EA	10		
6	Round Picnic Table - ADA	EA	1		
7	Round Picnic Table	EA	1		
8	Park Sign - Outdoor Creations	EA	1		
9	Barbecue Grill - Single - Dumor	EA	1		
10	Barbecue Grill - Group - Dumor	EA	1		
11	Bike Racks - Hoop - Dumor	EA	4		
12	Bike Lockers - Ground Control Systems	EA	2		
13	Pet Waste Station	EA	1		
14	Drinking Fountain w/Dog Bowl and Bottle Filler	EA	2		
15	Removable Bollards - Dumor	EA	3		
16	Interpretive Signage	EA	3		
17	ADA Parking Sign	EA	2		
E – PLAYGROUND AND FITNESS					
1	Play Equipment (including Tax and Freight), Foundation Design (Deferred Submittal to the County), and Installation.	LS	1		
2	P.I.P Safety Surfacing (at Playground ADA path & Fitness) with Aggregate Base	SF	3,990		
3	P.I.P Safety Surfacing (at Playground Hill) over Conc Base	SF	320		
4	EWF Safety Surfacing (at Playground)	SF	5,103		
5	Fitness Equipment incl. tax, freight and installation	LS	1		
F - STRUCTURES					
1	Base Preparation for Pre-Fab Restroom Building and Utility Connections	LS	1		
2	Pedestrian Bridge (including Tax and Freight), Abutment Foundation Design (Deferred Submittal to the County), and Installation	LS	1		
3	Shade Structures including Installation	LS	1		
4	Pilaster (at Ornamental Fence)	EA	12		
G – ELECTRICAL POWER, LIGHTING, EV					

Item No.	Item	Unit of measure	Estimated quantity	Unit price (in figures)	Item total (in figures)
1	Electrical service 400A, 120/208V, 3phase, 4 wire w/transformer pad	LS	1		
2	Service to Building	LS	1		
3	Service to amphitheater	LS	1		
4	Service to gardens	LS	1		
5	Parking Lot Lighting	EA	9		
6	Pathway lighting	EA	13		
7	EV Charging stations and infrastructure	EA	2		
8	EV Infrastructure for Future	LS	1		
H - PLANTING					
1	Soil Preparation including amendments	SF	82,034		
2	Sod Turf Lawn	SF	33,984		
3	Hydroseed Meadow Mix	SF	98,655		
4	Trees - 15 Gal from SacTree	EA	145		
5	Specimen Trees - 36" Box	EA	2		
6	Root Barriers	EA	110		
7	Bark Mulch	SF	10,650		
8	Bark Mulch in Planting Areas	SF	48,050		
9	Shrubs - 1 gal	EA	2,950		
10	Shrubs - 5 gal	EA	245		
11	Shrubs - 15 gal	EA	68		
I - IRRIGATION					
1	Irrigation system	SF	82,034		
2	Mainline Connection to Existing Water Meter	LS	1		
3	Revisions to Existing Irrigation System	Allow	1		
J - MISCELLANEOUS					
1	Maintenance (90 Day)	SF	82,034		
2	Mobilization/De-mobilization (NTE - 5%)	LS	1		
		BASE BID, ON-SITE ONLY			

NOTE: "TOTAL BASE BID" IS INCLDED ON THE NEXT PAGE.

BID SCHEDULE (OFF-SITE WORK)

Item No.	Item	Unit of measure	Estimated quantity	Unit price (in figures)	Item total (in figures)
A - SITE PREPARATION					
1	Mobilization	LS	1		
2	Temporary Erosion Control / SWPPP Protection	AC	0.12		
B – STREET WORK					
1	Sawcut Ex Pavement	LF	1,130		
2	Demo Ex Pavement / Median	SF	5,160		
3	Type 4 Median Curb	LF	960		
4	AC/AB Pavement	SF	4,100		
5	Sidewalk	SF	1,410		
6	Type 1A Curb	LF	105		
7	45' Driveway	LS	2		
8	Signage	LS	1		
C – TRAFFIC SIGNAL					
1	Traffic Signal Modification	LS	1		
2	Striping and Pavement Marking	LS	1		
3	Type H Marker	EA	42		
D - PLANTING					
1	Soil Preparation including Amendments	SF	2800		
2	Trees - 15 Gal from SacTree	EA	4		
3	Root Barriers	EA	8		
4	Bark Mulch in New Median	SF	2750		
5	Shrub Areas - 1 gal	EA	16		
E - IRRIGATION					
1	Irrigation system	SF	600		
F - MISCELLANEOUS					
1	Maintenance (30 Day)	SF	2800		
2	Mobilization/De-mobilization (NTE - 5%)	LS	1		
		BASE BID, OFF-SITE ONLY			

ADD TOTAL BASE BID _____

Bidders shall submit prices for both the On-Site Work and the Off-Site Work. The Total Base Bid shall be the sum of the On-Site Only and Off-Site Only Base Bids (See Section 1.3 and 1.4 of the Bidding Requirements). Award, if made, will be made to the lowest responsive responsible bidder based on the Total Base Bid. The Contract Price shall include both the On-Site Work and the Off-Site Work.

Acknowledge Addenda for On-site and Off-site Work.

Addendum #: 1 Signed: _____

Addendum #: 2 Signed: _____

Addendum #: 3 Signed: _____

Addendum #: _____ Signed: _____

1.4 DESIGNATION OF SUBCONTRACTORS

In compliance with Public Contract Code section 4100 et seq. each bidder shall set forth below the: (a) name, location of the mill, shop, or office, and California contractor's license number of each subcontractor who will perform work or labor or render service to the Contractor in or about the construction of the work or improvement to be performed under these specifications in excess of one-half of 1% of the Contractor's total bid, (b) description of the type of work to be performed by each such subcontractor, and (c) portion of the work (expressed in dollar amount) that will be performed by each such subcontractor.

If the Contractor fails to specify a subcontractor for any portion of the work to be performed under the Contract, it shall be deemed to have agreed to perform such portion itself, and it shall not be permitted to subcontract that portion of the work except under the conditions hereinafter set forth.

Subletting or subcontracting of any portion of the work in excess of one-half of 1% of the Contractor's total bid as to which no subcontractor was designated in the original bid shall only be permitted in cases of public emergency or necessity, and then only after a making a written finding as a public record of the District setting forth the facts constituting the emergency or necessity.

Subcontractor (name, address, Subcontractor's CSLB License Number, Subcontractor's DIR Public Works Contractor Registration Number)	Description of Subcontractor Work	Portion of Work ($)

Subcontractor (name, address, Subcontractor's CSLB License Number, Subcontractor's DIR Public Works Contractor Registration Number)	Description of Subcontractor Work	Portion of Work ($)

Subcontractor (name, address, Subcontractor's CSLB License Number, Subcontractor's DIR Public Works Contractor Registration Number)	Description of Subcontractor Work	Portion of Work ($)

Additional pages attached: _____

1.5 BID BOND

KNOW ALL MEN BY THESE PRESENTS, THAT WE, THE UNDERSIGNED _____, Contractor as Principal; and _____, as Surety, are hereby held and bound unto North Highlands Recreation and Park District, hereinafter called the District, in the sum of $_____, which sum is equal to at least ten percent of the total amount of the Bid, payment of which sum, well and truly to be made, we hereby jointly and severally bind ourselves, our heirs, executors, administrators, successors, and assigns.

The condition of the above obligation is such that whereas the Principal has submitted to the District a certain Bid, attached hereto and hereby made a part hereof, to enter into a Contract in writing, for the construction of the following public works project:

> Sierra Creek Community Park (Park Site) - Scope of work including but not limited to: construction of a new community park with play equipment, shade shelters, picnic areas with picnic tables and BBQs, a parking lot with electric vehicle charging stations, a space for a community garden, fencing, planting and irrigation, restroom building, power and lighting, and pedestrian bridge over the existing Sierra Creek in the park.
>
> Watt Avenue Street Improvements (Off-Site)- Scope of work for off-site improvements includes but not limited to: Construction of U-Turn Lane, asphalt pavement, curbs, gutters and sidewalks, driveways and median improvements including landscape, traffic signal modification, and striping.

NOW, THEREFORE,

(a) If the Bid is rejected, or in the alternate,

(b) If the Bid is accepted and the Principal shall sign and deliver a Contract, in the form of the Contract attached hereto and shall execute and deliver Performance and Payment Bonds in the forms attached hereto and shall deliver proof of insurance (all completed in accordance with the Contract Documents), and shall in all other respects perform the agreement created by the acceptance of the Bid;

Then, this obligation shall be void, otherwise the same shall remain in force and effect; it being expressly understood and agreed that the liability of the Surety for any and all default of the Principal hereunder shall be the amount of this obligation as herein stated.

The Surety, for value received, hereby stipulates and agrees that the obligations of said Surety and its bond shall be in no way impaired or affected by any extension of the time within which the District may accept such Bid, and said Surety does hereby waive notice of any such extension.

IN WITNESS THEREOF, the above bounded parties have executed this instrument under their several seals this _____ day of _____, the name and corporate seal of each corporate party being hereto affixed and those presents duly signed by its undersigned representative, pursuant to authority of its governing body.

For Contractor as Principal:

_____

Name: _____

Title: _____

For Surety:

_____

Name: _____

Title: _____

(Seal)

1.6 EXPERIENCE QUALIFICATIONS

The Bidder has been engaged in the contracting business, under the present business name for ___years. Experience in work of a nature similar to that covered in the Bid extends over a period of _____ years.

The Bidder, as a contractor, has never failed to satisfactorily complete a contract awarded to it, except as follows:

_____

_____

_____

_____

The following contracts have been satisfactorily completed in the last three years for the persons, firm or entity indicated:

Year	Owner	Type of Work	Contract Amount

The following is a list of plant and equipment owned by the Bidder, which is definitely available for use on the proposed work as required.

Quantity	Name, Type, and Capacity	Condition	Location

Executed on _____, at _____, _____

BIDDER

Company Name: _____

Authorized Signature: _____

Printed Name: _____

Title: _____

1.7 NONCOLLUSION DECLARATION TO BE EXECUTED BY BIDDER AND SUBMITTED WITH BID (PUBLIC CONTRACT CODE SECTION 7106)

The undersigned declares:

I am the _____ (Title) of _____ (Bidder), the party making the foregoing bid.

The bid is not made in the interest of, or on behalf of, any undisclosed person, partnership, company, association, organization, or corporation. The bid is genuine and not collusive or sham. The bidder has not directly or indirectly induced or solicited any other bidder to put in a false or sham bid. The bidder has not directly or indirectly colluded, conspired, connived, or agreed with any bidder or anyone else to put in a sham bid, or to refrain from bidding. The bidder has not in any manner, directly or indirectly, sought by agreement, communication, or conference with anyone to fix the bid price of the bidder or any other bidder, or to fix any overhead, profit, or cost element of the bid price, or of that of any other bidder. All statements contained in the bid are true. The bidder has not, directly or indirectly, submitted his or her bid price or any breakdown thereof, or the contents thereof, or divulged information or data relative thereto, to any corporation, partnership, company, association, organization, bid depository, or to any member or agent thereof, to effectuate a collusive or sham bid, and has not paid, and will not pay, any person or entity for such purpose.

Any person executing this declaration on behalf of a bidder that is a corporation, partnership, joint venture, limited liability company, limited liability partnership, or any other entity, hereby represents that he or she has full power to execute, and does execute, this declaration on behalf of the bidder.

I declare under penalty of perjury under the laws of the State of California that the foregoing is true and correct and that this declaration is executed on _____ _____, at _____, _____.

Authorized Signature: _____

Printed Name: _____

1.8 ACKNOWLEDGMENT OF INSURANCE AND BONDING REQUIREMENTS

By signing below Bidder acknowledges the insurance requirements as listed in the General Conditions, section 5.58 "Insurance." By this acknowledgment, the Bidder and its insurance provider(s) and surety(ies) certify that they have read and understand the insurance and bonding requirements in their entirety, including limits of coverage, additional insureds and endorsements, and bonding requirements, and that the Bidder can provide the insurance coverage and bonds as required in the Contract documents without exception.

Bidder understands that if the insurance coverage provided in section 5.58 of the General Conditions and the Contract Bonds cannot be provided, its bid is subject to rejection by the District as non-responsive.

BIDDER

Company Name: _____

Authorized Signature: _____

Printed Name: _____

Title: _____

Date: _____

SURETY PROVIDER/ SURETY REPRESENTATIVE

Surety Name: _____

Authorized Signature: _____

Printed Name: _____

Title: _____

Date: _____

INSURANCE PROVIDER/ INSURANCE REPRESENTATIVE

Insurer Name: _____

Authorized Signature: _____

Printed Name: _____

Title: _____

Date: _____

Bidder Must Provide This Acknowledgment for Each Insurer or Surety Providing Insurance Coverage or a Bond under this Contract

1.9 IRAN CONTRACTING ACT CERTIFICATION

Pursuant to Public Contract Code (PCC) section 2204, the following Iran Contracting Act certification is required if your bid totals $1,000,000 or more.

If your bid totals $1,000,000 or more, you must complete only one of the following two paragraphs. To complete paragraph 1, check the corresponding box and complete the certification. To complete paragraph 2, simply check the corresponding box.

☐ 1. We are not on the current list of persons engaged in investment activities in Iran created by the California Department of General Services (DGS) pursuant to PCC 2203(b), and we are not a financial institution extending twenty million dollars ($20,000,000) or more in credit to another person, for 45 days or more, if that other person will use the credit to provide goods or services in the energy sector in Iran and is identified on the current list of persons engaged in investment activities in Iran created by DGS.

I declare under penalty of perjury under the laws of the State of California that the foregoing is true and correct and that this declaration is executed on

_____ (date),

at _____ (city), _____ (state).

_____(signature)

_____(printed name)

OR

☐ 2. We have received written permission from the District to submit a bid pursuant to PCC 2203(c) or (d). A copy of the written permission from the District is included with our bid.

2 CONTRACT FORMS

2.1 CONTRACT

THIS CONTRACT is made as of [date], in Sacramento, California, by and between North Highlands Recreation and Park District, a public agency, ("District") and [name of contractor], a [insert capacity of Contractor, e.g., a California corporation, partnership or a sole proprietorship] ("Contractor"), who agree as follows:

2.1.1 The Contractor agrees to furnish all labor, materials, supplies, tools, and equipment and to perform all the work required to construct and complete in a good and workmanlike manner, and in strict accordance with the Contract Documents, those certain improvements entitled:

> Sierra Creek Community Park (Park Site)- Scope of work including but not limited to: construction of a new community park with play equipment, picnic areas with shade structures, picnic tables and BBQs, a parking lot with electric vehicle charging stations, a space for a community garden, fencing, planting and irrigation, restroom building, power and lighting, and new pedestrian bridge over the existing Sierra Creek in the park.
>
> Watt Avenue Street Improvements (Off-Site)- Scope of work for off-site improvements includes but not limited to: Construction of U-Turn Lane, asphalt pavement, curbs, gutters and sidewalks, driveways and median improvements including landscape, traffic signal modification, and striping.

2.1.2 Contract Documents for this project have been prepared by Westwood Professional Services, hereinafter called the Engineer. All Contract Documents, and each and every provision thereof, relating to this Contract are hereby made a part of and incorporated by reference into this Contract. The following are the applicable Contract Documents: Invitation to Bid, Bid, Bid Bond, Designation of Subcontractors, Experience Qualifications, Noncollusion Declaration, Acknowledgment of Insurance Requirements, Instructions to Bidders, Contract, Faithful Performance Bond, Payment Bond, Contractor's Certificate Regarding Workers' Compensation, the Insurance Certificates and Endorsements, Abbreviations and Definitions, General Conditions, Technical Specifications and Plans (Drawings), applicable to this work, and all Addenda and Change Orders, as well as all written modifications of the Contract Documents agreed to by the parties. Any work called for in one Contract Document and not mentioned in others is to be performed and executed as if mentioned in all Contract Documents.

2.1.3 The District agrees to pay the Contractor for the performance of the Contract, subject to additions and deductions provided therein, the following prices, and the Contractor agrees to receive and accept the following prices as full compensation for furnishing all materials, labor, supplies, tools and equipment, and for doing all the work contemplated and embraced in this Contract, and for all risks of every description connected with the work and for all expenses incurred by or in consequence of the suspension or discontinuance of the work, and

for well and faithfully completing the work and the whole thereof in the manner and according to the Contract Documents and the requirements of the Engineer under them, namely:

[bid items and prices to be listed here]

2.1.4 The District shall make payments on the account of the Contract as specified in the General Conditions of the Contract.

2.1.5 The Contractor shall diligently prosecute the work to completion in accordance with the following schedule: Work on the total project shall be completed within Three hundred and thirty (330) calendar days from the date of the Notice to Proceed.

2.1.6 The Contractor acknowledges that it has examined the prevailing rate of per diem wages as established and published by the California Director of Industrial Relations, copies of which are available for inspection at the office of the District. The Contractor agrees to pay all workers employed on the work not less than the applicable prevailing rate of per diem wages, as the same may be amended from time to time. The Contractor shall post at each job site a copy of the determination of the Director of Industrial Relations of the prevailing rate of per diem wages. The Contractor also shall ensure that all subcontractors on the work are notified of and comply with their obligations in regard to the payment of prevailing wages to all of their workers employed on the Project.

IN WITNESS WHEREOF, the parties execute this Contract as follows:

For District:

_____

Name: _____

Title: Chairperson, Board of Directors

Attest:

_____

Name: Scott Graham

Title: District Administrator

For Contractor:

_____

Name: _____

Title: _____

2.2 FAITHFUL PERFORMANCE BOND

KNOW ALL MEN BY THESE PRESENTS,

THAT, WHEREAS, North Highlands Recreation and Park District, hereinafter designated as the "District," entered into a Contract with _____, hereinafter designated as the "Contractor" for the work described as follows:

> Sierra Creek Community Park - Scope of work including but not limited to: construction of a new community park with play equipment, picnic areas with shade structures, picnic tables and BBQs, a parking lot with electric vehicle charging stations, a space for a community garden, fencing, planting and irrigation, restroom building, power and lighting, and new pedestrian bridge over the existing Sierra Creek in the park.
>
> Watt Avenue Street Improvements (Off-Site)- Scope of work for off-site improvements includes, but not limited to: Construction of U-Turn Lane, asphalt pavement, curbs, gutters and sidewalks, driveways and median improvements including landscape, traffic signal modification and striping.

WHEREAS, the Contractor is required under terms of the Contract to furnish a bond for the faithful performance of the Contract;

WHEREAS, the Contract is by reference made a part hereof;

NOW, THEREFORE, we, the undersigned Contractor, as Principal, and _____, a corporation organized and existing under the laws of the State of _____, and duly authorized and in good standing to transact business under the laws of the State of California, as an admitted Surety, are held and firmly bound unto the District in the penal sum of $_____, the sum being not less than one hundred percent (100%) of the total Contract amount, for the payment of which sum well and truly to be made, we bind ourselves, our heirs, executors, administrators, and successors, jointly and severally, firmly by these presents.

THE CONDITION OF THIS OBLIGATION IS SUCH, THAT, if the above bounden Contractor, its heirs, executors, administrators, successors or assigns, shall in all things stand to and abide by, and well and truly keep and perform the covenants, conditions, and agreements in the Contract and any alterations thereof made as therein provided, on its part, to be kept and performed at the time and in the manner therein specified, and in all respects according to their true intent and meaning, and shall indemnify and save harmless the District, its directors, officers, employees and agents, as therein stipulated, then this obligation shall become null and void; otherwise it shall be and remain in full force and effect.

As a condition precedent to the satisfactory completion of the said Contract, the above obligation in above-stated amount shall hold good for a period of one (1) year after the recording

of the notice of completion, during which time if the Contractor, its heirs, executors, administrators, successors or assigns shall fail to make full, complete, and satisfactory repair and replacements or totally protect the District from loss or damage made evident during the period of one (1) year from the date of recording of the notice of completion, and resulting from or caused by defective materials or faulty workmanship in the prosecution of the work done, the above obligation in the above-stated amount shall remain in full force and effect. However, anything in this paragraph to the contrary notwithstanding, the obligation of the Surety hereunder shall continue so long as any obligation of the Contractor remains.

The Surety, for value received, hereby stipulates and agrees that no change, extension of time, alteration or addition to the terms of the Contract or to the work to be performed thereunder or the specifications accompanying the same shall, in any way, affect its obligations on this bond and it does hereby waive notice of any such change, extension of time, alteration, or addition to the terms of the Contract or to the work or to the specifications. The Surety hereby waives the provisions of Sections 2819 and 2845 of the Civil Code of the State of California.

In the event suit is brought upon this bond by the District and judgment is recovered, the Surety shall pay all costs incurred by the District in such suit, including, but not limited to, administrative and consultant costs, and reasonable attorneys' fees to be fixed by the Court.

The address or addresses at which the principal and surety(ies) may be served with notices, papers and other documents under the California Bond and Undertaking Law (Code of Civil Procedure section 995.010 et seq.) is the following:

_____

_____

IN WITNESS THEREOF, the above bounded parties have executed this instrument under their several seals this _____ day of _____, the name and corporate seal of each corporate party being hereto affixed and those presents duly signed by its undersigned representative, pursuant to authority of its governing body.

For Contractor as Principal:

_____

Name: _____

Title: _____

For Surety:

_____

Name: _____

Title: _____

(Seal)

(NOTE: The date of this bond must not be prior to date of Contract. If Contractor is a partnership, all partners should execute bond.)

2.3 PAYMENT BOND

KNOW ALL MEN BY THESE PRESENTS,

THAT, WHEREAS, the North Highlands Recreation and Park District, hereinafter designated as the "District," has awarded to _____ hereinafter designated as the "Contractor" a Contract for the work described as follows:

> Sierra Creek Community Park - Scope of work including but not limited to: construction of a new community park with play equipment, shade shelters, picnic areas picnic tables and BBQs, a parking lot with electric vehicle charging stations, a space for a community garden, fencing, planting and irrigation, restroom building, power and lighting, and new pedestrian bridge over the existing Sierra Creek in the park.
>
> Watt Avenue Street Improvements (Off- Site)- Scope of work for off-site improvements includes but not limited to: Construction of U-Turn Lane, asphalt pavement, curbs, gutters and sidewalks, driveways and median improvements including landscape, traffic signal modification and striping.

WHEREAS, the Contractor is required by the Contract and by the provisions of Division 4, Part 6 of the Civil Code to furnish a bond in connection with the Contract, as hereinafter set forth.

WHEREAS, the Contract by this reference is made a part hereof;

NOW, THEREFORE, we, the undersigned Contractor, as Principal, and _____ _____, as Surety, a corporation organized and existing under the laws of the State of _____, duly authorized and in good standing to transact business under the laws of the State of California, as an admitted Surety, are held and firmly bound unto the District in the sum of $ _____, the sum being not less than one hundred percent (100%) of the total Contract amount payable by the District, under the terms of the Contract, for which payment well and truly to be made, we bind ourselves, our heirs, executors and administrators, successors and assigns, jointly and severally, firmly by these presents.

THE CONDITION OF THIS OBLIGATION IS SUCH, THAT, if the Contractor, its heirs, executors, administrators, successors, assigns or subcontractors shall fail to pay for any materials, provisions, provender or other supplies or teams, implements or machinery used in, upon, for or about the performance of the work contracted to be done, or shall fail to pay for any work or labor thereon of any kind, or shall fail to pay any of the persons named in Civil Code Section 9100, or shall fail to pay for amounts due under the Unemployment Insurance Code with respect to such work or labor as required by the provisions of Division 4, Part 6 of the Civil Code, or shall fail to pay for any amounts required to be deducted, withheld, and paid over to the Employment Development Department from the wages of employees of the Contractor and subcontractors

pursuant to Section 13020 of the Unemployment Insurance Code with respect to such work or labor, and provided that the claimant shall have complied with the provisions of that Code, the Surety or Sureties hereon will pay for the same in amount not exceeding the sum specified in the Contract, otherwise the above obligation shall be void. In case suit is brought upon this bond, the Surety will pay a reasonable attorney's fee to the prevailing party to be fixed by the court. This bond shall inure to the benefit of any and all persons, companies and corporations entitled to file claims under Section 9100 of the Civil Code, so as to give a right of action to them or to their assigns in any suit brought upon this bond. And the Surety, for value received, hereby stipulates and agrees that no change, extension of time, alteration or addition to the terms of the Contract or to the work to be performed thereunder or the specifications accompanying the same shall in any way affect its obligation on this bond, and it does hereby waive notice of any such change, extension of time, alteration or addition to the terms of the Contract or to the work or to the specifications.

The address or addresses at which the principal and surety(ies) may be served with notices, papers and other documents under the California Bond and Undertaking Law (Code of Civil Procedure section 995.010 et seq.) is the following:

_____

_____

IN WITNESS THEREOF, the above bounded parties have executed this instrument under their several seals this _____ day of _____, the name and corporate seal of each corporate party being hereto affixed and those presents duly signed by its undersigned representative, pursuant to authority of its governing body.

For Contractor as Principal:

_____

Name: _____

Title: _____

For Surety:

_____

Name: _____

Title: _____

(Seal)

(NOTE: The date of this bond must not be prior to date of Contract. If Contractor is a partnership, all partners should execute bond.)

2.4 CONTRACTOR'S WORKERS' COMPENSATION CERTIFICATE (LABOR CODE SECTION 1861)

To: North Highlands Recreation and Park District

I am aware of the provisions of Section 3700 of the Labor Code, which require every employer to be insured against liability for workers' compensation or to undertake self-insurance in accordance with the provisions of that code, and I will comply with such provisions before commencing the performance of the work under this Contract.

BIDDER

Company Name: _____

Authorized Signature: _____

Printed Name: _____

Title: _____

Date: _____

3 ABBREVIATIONS AND DEFINITIONS

3.1 ABBREVIATIONS

The following abbreviations may be used in the Contract Documents:

AA	Aluminum Association
AASHO	American Association of State Highway Officials
ABMA	American Boiler Manufacturer's Association
ACI	The American Concrete Institute
AGA	American Gas Association
AGC	Associated General Contractors
AGMA	American Gear Manufacturer's Association
AI	The Asphalt Institute
AIA	American Institute of Architects
AISC	American Institute of Steel Construction
AISI	American Iron and Steel Institute
ANSI	American National Standards Institute, Inc.
API	American Petroleum Institute
APWA	American Public Works Association
AREA	American Railway Engineering Association
ASCE	American Society of Civil Engineers
ASME	American Society of Mechanical Engineers
ASTM	American Society for Testing and Materials
AWPA	American Wood Preservers' Association
AWS	American Welding Society
AWWA	American Water Works Association
BGHMA	Builders Hardware Manufacturers Association

CCMTC	California Concrete Masonry Technical Committee
CRSI	Concrete Reinforcement Steel Institute
DFPA	Douglas Fir Plywood Association
ETL	Electrical Testing Laboratory
FS	Federal Specification
ICBO	International Conference of Building Officials
IEEE	The Institute of Electrical and Electronics Engineers
IES	Illuminating Engineering Society
IPCEA	Insulated Power Cable Engineers Association
MBMA	Metal Building Manufacturer's Association
MSS	Manufacturers Standardization Society of Valve and Fitting Industry Standards
NBFU	National Board of Fire Underwriters
NBS	National Building Standards
NEC	National Electrical Code
NEMA	National Electrical Manufacturers Association
NFPA	National Fire Protection Association
OSHA	Occupational Safety and Health Act of 1970
PCA	Portland Cement Association
SMACNA	Sheet Metal and Air Conditioning Contractor's National Association
SSPC	Steel Structures Painting Council
SSPWC	Standard Specifications for Public Works Construction
UBC	Uniform Building Code
UHPHS	United States Public Health Service
UL	Underwriter's Laboratory
UMC	Uniform Mechanical Code

UPC	Uniform Plumbing Code
USAS	The United States of America Standard Institute
USBR	United States Bureau of Reclamation
WCLIB	West Coast Lumber Inspection Bureau
WIC	Woodwork Institute of California

3.2 DEFINITIONS

For purposes of the Contract Documents, these words and phrases shall be defined as follows:

3.2.1 District means the North Highlands Recreation and Park District, also referred to as the Owner.

3.2.2 As Approved shall be understood to be followed by the words "by the Engineer," unless otherwise qualified.

3.2.3 As Shown and As Indicated shall be understood to be followed by the words "on the Plans."

3.2.4 Bid means the offer of the bidder for the work when made out and submitted on the prescribed bid form, properly completed, signed and guaranteed.

3.2.5 Bid Bond means the cash, cashier's check, certified check, or bidder's bond accompanying the bid submitted by the bidder, as a guarantee that the bidder will enter into a Contract with the District for the performance of work herein described.

3.2.6 Bidder means any individual, firm, partnership or corporation submitting a bid for the work contemplated, and acting directly or through a duly authorized representative.

3.2.7 Board of Directors or Board means the Board of Directors of the District.

3.2.8 Contract means the written agreement covering the performance of the work and the furnishing of labor, materials, tools and equipment in the construction of the work. The Contract shall include all Contract Documents and supplemental agreements amending or extending the work contemplated which may be required to complete the work in a substantial and acceptable manner. Supplemental agreements are written agreements covering alterations, amendments or extensions to the Contract, and include Addenda and Contract Change Orders.

3.2.9 Contract Documents means any or all of the documents listed in section 2.1.2 of the Contract.

3.2.10 Contractor means the person or persons, firm, partnership or corporation or other entity who has entered into the Contract with the District to perform the work.

3.2.11 County means County of Sacramento, California.

3.2.12 Date of the Contract means the date on which the Contract is signed by the District's authorized representative.

3.2.13 Days mean calendar days unless otherwise designated.

3.2.14 Engineer means the architect or engineer retained by the District, or the person designated as the District Representative in the Invitation to Bid. The Engineer and the District Representative are authorized to act on behalf of the District, either directly or through properly authorized agents acting within the scope of their delegated duties.

3.2.15 Force Majeure Event means any event that materially affects a party's performance and is one or more of the following: (1) acts of god or other natural disasters; (2) terrorism or other acts of a public enemy; (3) orders of governmental authorities (including, without limitation, unreasonable and unforeseeable delay in the issuance of permits or approvals by governmental authorities that are required for the Work); (4) pandemics, epidemics or quarantine restrictions; (5) strikes and other organized labor action occurring at the project site and the effects thereof on the Work, but only to the extent that such strikes and other organized labor action and the effects thereof cannot be avoided by the use of replacement workers. A claim of a Force Majeure Event will only apply to the extent that the event and effects thereof occur because of factors that could not be planned for or mitigated and are beyond the control of Contractor and its subcontractors of every tier.

3.2.16 He shall include "she" and "it" and his shall include "her" and "its."

3.2.17 Or Equal means the term "or equal" shall be understood to indicate that the "equal" product be the same or better than the product named in function, performance, reliability, quality, and general configuration. Determination of equality in reference to the project design requirements will be made by the Engineer.

3.2.18 Plans or Drawings mean the term "Plans" or "Drawings" refers to the official plans, drawings, profiles, cross sections, elevations, details, and other working drawings and supplementary drawings, or reproductions thereof, signed by the Engineer, which show the location, character, dimensions, and details of the work to be performed, and identified at section 2.1.2. Plans may either be bound in the same book as the balance of the Contract Documents or bound in separate sets, and are a part of the Contract Documents, regardless of the method of binding.

3.2.19 Specifications mean the terms, provisions, and requirements contained in the Contract Documents and identified in section 2.1.2 and is synonymous with "Technical Specifications." Where standard specifications, such as those of "ASTM", "AASHO", etc. have been referred to, the applicable portions of such standard specifications shall become a part of these Contract Documents.

3.2.20 State means State of California.

3.2.21 State Standard Specifications mean the edition in effect as of the Date of Execution of the Contract of the Standard Specifications issued by the State of California Business and Transportation Agency, Department of Transportation, unless a specific edition is referenced.

3.2.22 Subcontractor means only those persons, firms or entities having a direct contract with the Contractor, and it includes one who furnishes material worked to a special design according to the Plans or Specifications of this work, but does not include one who merely furnishes material not so worked and would be considered a supplier only.

3.2.23 Supply Shortage means a shortage in materials that is (a) supported by documented proof that Contractor made every effort to obtain such materials from all available sources; (b) such shortage is due to the fact that such materials are not physically available from single or multiple sources, could have been obtained only at exorbitant prices entirely inconsistent with current and standard rates taking into account the quantities involved and the usual industry practices in obtaining such quantities, or such materials require a significant lead time to fabricate; and (c) such shortages and the difficulties in obtaining alternate sources of materials could not have been known or anticipated by Contractor at the time it submitted its bid or entered the Contract. Market fluctuations in prices of materials, whether or not resulting from a Force Majeure Event, do not constitute a Supply Shortage.

3.2.24 Time Limits mean all time limits stated in the Contract Documents are of the essence of the Contract.

3.2.25 Work means all the work specified, indicated, shown or contemplated in the Contract Documents to construct the improvements, including all alterations, amendments or extensions thereto made by Contract Change Order or other written orders of the Engineer.

3.2.26 Whenever in the Contract Documents or upon the Drawings the words DIRECTED, REQUIRED, PERMITTED, ORDERED, DESIGNATED, PRESCRIBED, or words of like import are used, it shall be understood that the direction, requirement, permission, order, designation or prescription of the Engineer is intended, and similarly the words APPROVED, ACCEPTABLE, SATISFACTORY, or words of like import, shall mean approved or acceptable to, or satisfactory to the Engineer, unless otherwise expressly stated.

4 INSTRUCTIONS TO BIDDERS

4.1 INTRODUCTION

Each bid shall be in accordance with these Instructions to Bidders and other applicable provisions of the Contract Documents. The Invitation to Bid will specify whether Contract Documents are available on a purchase or deposit basis. Where payment for such sets is specified, no refund will be made.

4.2 PLANS

Additional copies of full-scale plans or individual plan sheets may be obtained at the office of the Engineer for the cost of reproduction.

4.3 LOCAL CONDITIONS

4.3.1 The quantities of work or material stated in the unit price items of the Bid Schedule are given only as a basis for the comparison of Bids, and the District does not represent or warrant that the actual amount of work or material will correspond therewith, but reserves the right to increase or decrease the quantity of any unit price item of the work as may be deemed necessary or expedient by the Engineer.

4.3.2 The Bidder shall examine carefully the site of the work contemplated and the Contract Documents. The submission of a Bid shall be conclusive evidence that the Bidder has investigated and is satisfied as to the conditions to be encountered, as to the character, quality and quantities of work to be performed and the materials to be furnished, and as to the requirements of the Contract Documents. Bidders shall thoroughly examine and be familiar with the Plans and Specifications. The failure of any bidder to receive or examine any form, instrument, addendum or other document, or to visit the site and acquaint himself with conditions there existing shall in no way relieve the Bidder from any obligation with respect to its proposal or to the Contract. The Plans for the work show conditions as they are supposed or believed by the District, the Engineer or their representatives to exist; but it is neither intended nor to be inferred that the conditions as shown thereon constitute a representation by the District, the Engineer, or their representatives that such conditions are actually existent, nor shall the District, the Engineer or their representatives be liable for any loss sustained by the Contractor as a result of any inference or extrapolation drawn by the Bidder between conditions as shown on the Plans and the actual conditions revealed during the progress of work, or otherwise. The Bidder's attention is directed to the possible existence of obstructions and public or private improvements which may be within the limits of the work or adjacent thereto, which may or may not be shown on the Plans.

4.3.3 Where the Engineer has made investigations of surface and subsurface conditions in areas where work is to be performed under the Contract, or in other areas, some of which may constitute possible local material sources, such investigations were made only for the purpose of study and design. Where such investigations have been made, bidders or Contractor may, upon written request, inspect the records of the Engineer as to such investigations subject to and upon the conditions hereinafter set forth. Such inspection of records may be made at the office of the Engineer.

4.3.4 The records of such investigations are not a part of the Contract and are made available for inspection solely for the convenience of the bidder or Contractor. It is expressly understood and agreed by bidder or Contractor that neither the District nor the Engineer assumes any responsibility whatsoever with respect to the sufficiency or accuracy of the investigations thus made, the records thereof, or of the interpretation set forth therein or made by the Engineer in his use thereof and there is no representation, warranty or guarantee, either express or implied, that the conditions indicated by such investigations or records thereof are correct or representative of those existing throughout such areas or any part thereof, or that unanticipated developments may not occur or that materials other than, or in proportions different from, those indicated may not be encountered.

4.3.5 Where a log of test borings or other investigations of subsurface conditions have been made by the District in respect to foundation or other structural design, and that information is shown in the plans, said information represents only the statement by the District as to the character of material which has been actually encountered by it in its investigation, and is only included for the convenience of bidders. Water levels that may be shown on a log of test borings are valid only for the stated date of observation. The water level may change from season to season and from year to year. Investigations of subsurface conditions are made for the purpose of design, and the District assumes no responsibility whatever in respect to the sufficiency or accuracy of borings or of the log of test borings or other preliminary investigations, or of the interpretation thereof, and there is no guaranty, either expressed or implied, that the conditions indicated are representative of those existing throughout the work, or any part of it, or that unobserved or unanticipated developments may not occur. Making such information available to bidders is not to be construed in any way as waiver of the provisions of this section and bidders must satisfy themselves through their own investigations as to conditions to be encountered.

4.3.6 The availability or use of information described in these Instructions to Bidders and other bid documents shall not be construed in any way as a waiver of the provisions of the Instructions of Bidders and a Bidder or Contractor is cautioned to make such an investigation and examination as it deems necessary to satisfy itself as to conditions to be encountered in the performance of the work and, with respect to possible local material sources, the quality and quantity of material available from such property and the type and extent of processing that may be required in order to produce material conforming to the requirements of the Specifications.

4.3.7 No information derived from such inspection of records of investigations or compilations thereof made by the Engineer, will in any way relieve the bidder or Contractor from any risk or from properly fulfilling the terms of the Contract.

4.3.8 Information derived from inspection of topographic maps, or from Plans showing location of utilities and structures will not in any way relieve the Contractor from any risk, or from properly examining the site and making such additional investigations as it may elect, or from properly fulfilling all the terms of the Contract.

4.4 FORM OF BID AND SIGNATURE

Bids shall be submitted only on the forms attached hereto or copies thereof and shall be enclosed in a sealed envelope and marked and addressed as hereinafter directed. The Bidder shall state in figures the unit prices or the specific sums as the case may be, for which he proposes to supply the labor, materials, supplies tools or equipment, and perform the work required by the Contract Documents. If the Bid is made by an individual, it shall be signed by its full name and address shall be given; if it is made by a partnership, it shall be signed with the partnership name by a member of the partnership, who shall also sign his own name, and the name and address of each member of such partnership shall be given; and, if it is made by a corporation the name of the corporation shall be given and it shall be signed by its duly authorized officer or officers, the name(s) and title(s) of all signing officers, of the corporation shall be given, and the address of the corporation and the state in which incorporated shall be stated. Bids will be considered only from persons licensed as required under applicable provisions of the Contractors' State License Law (California Business and Professions Code section 7000, et seq.) and rules and regulations adopted pursuant thereto; and each bidder shall insert its type of contractor's license, license number, and other requested information in the place provided in the bid. No oral, telephonic, e-mail, facsimile or telegraphic Bid or modification of a Bid will be considered.

4.5 SUBMISSION OF BIDS

4.5.1 All Bids must be submitted not later than the time prescribed, at the place and in the manner set forth in the Invitation to Bid. The District shall not consider any Bid received after the time fixed or received at any place other than the place stated in the Invitation to Bid. Bids must be made on the prescribed Bid forms. A complete Bid requires submission of fully completed and executed: Bid, Designation of Subcontractors (if applicable), Bid Bond (or other bid guarantee), Experience Qualifications and Noncollusion Declaration. Each Bid must be submitted in a sealed envelope, so marked as to indicate its contents without being opened, and addressed in conformance with the instructions in the Invitation to Bid. The bidder is wholly responsible to see that its Bid is submitted at the time and place named for the opening of bids.

4.5.2 Bids shall acknowledge receipt of all addenda (identified by addendum no.) issued during the bidding period. Failure to acknowledge an addendum or clarification may result in the Bid being rejected as not responsive.

4.5.3 Bids shall be open at the time and place specified in the Invitation to Bid, unless changed by addendum. All Bids will be opened and read publicly. Bidders, their representatives and other interested parties, are invited to be present at the opening.

4.6 PREPARATION OF THE BID

4.6.1 Blank spaces in the Bid shall be properly completed. The phraseology of the Bid must not be changed and no additions shall be made to the items mentioned therein. Unauthorized conditions, limitations or provisions attached to a Bid may render it nonresponsive and may cause its rejection. If erasures, interlineations or other changes appear on the form, each erasure, interlineation or change must be initialed by the person signing the Bid. Alternative Bids will not be considered unless specifically provided for in the Bid Schedule.

Where performance and/or labor and material bonds are required, the Bidder shall name in his Bid the surety or sureties which have agreed to furnish the bonds.

4.6.2 Section 5.41 of the Contract General Conditions provides that the successful Contractor shall pay all federal, state and local taxes, including manufacturers' taxes, sales taxes, use taxes, processing taxes, and payroll, wage, insurance, social security, and unemployment taxes on wages, salaries or any remuneration paid to Contractor's employees. A bidder's bid prices shall be deemed to include all applicable taxes, and there shall be no separate bid item or billing for taxes.

4.7 BID GUARANTEE

4.7.1 All Bids shall be accompanied by a Bid Bond, as defined, made payable to the District. The Bid Bond must be enclosed in the same envelope with the Bid. The amount of the Bid Bond shall be not less than 10 percent of the total amount of the Bid.

4.7.2 If a bond is utilized, the Attorney in Fact (resident agent) who executes the Bid Bond on behalf of the surety company must attach a copy of his Power of Attorney as evidence of his authority. A notary shall acknowledge the power as of the date of execution of the surety bond which it covers. A bond will be accepted only if it is made out on either the Bid Bond form enclosed in these documents or on a form which substantially conforms to it.

4.8 LIST OF SUBCONTRACTORS; SUBCONTRACTING LIMITS

4.8.1 Each Bidder shall set forth in its Bid on the form provided the following information in accordance with the provisions of California Public Contract Code section 4100, et seq.: (a) The name, location of the place of business, and California contractor's license number of each subcontractor who will perform work or labor or render service to the Contractor in or about the construction of the work or improvement, and of each subcontractor who, under subcontract to the Contractor, is to specifically fabricate and install or provide a portion of the work or improvement according to the Contract Documents, in any amount in excess of 1/2 of 1 percent of the Contractor's total Bid; and (b) The portion of the work that will be done by each such subcontractor. Only one subcontractor shall be listed for each such portion of the work as defined in the Bid. If the Bidder fails to specify a subcontractor for any portion of the work to be performed under the Contract, the Bidder agrees to perform that portion of the work itself.

4.8.2 The Contractor shall perform with its own organization work amounting to not less than 50 percent of the original total contract price, except that any designated "Specialty Items" may be performed by subcontract and the amount of any such "Specialty Items" so performed may be deducted from the original total contract price before computing the amount of work required to be performed by the Contractor with its own organization. When items of work in the Bid schedules are preceded by the letter (S), such items shall be deemed designated "Specialty Items." Where an entire item is subcontracted, the value of work subcontracted will be based on the contract item bid price. When a portion of an item is subcontracted, the value of work subcontracted will be based on the estimated percentage of the contract item bid price, determined from information submitted by the Contractor, subject to approval by the Engineer.

4.9 INTERPRETATION OF CONTRACT DOCUMENTS

4.9.1 Any explanation desired by the bidders regarding the meaning or interpretation of any of the Contract Documents must be requested in writing, with sufficient allowance of time for receipt of reply before the time set for opening of Bids. Any such explanations or interpretations will be made only in the form of addenda to the documents and will be furnished to all bidders who shall submit all addenda with their Bids. Neither the Engineer nor any representative of the District is authorized to give oral explanations or interpretations of Contract Documents, and a submission of a Bid constitutes agreement by the bidder that he has placed no reliance on any such oral explanation or interpretation. However, the Engineer may, upon inquiry by bidder, orally direct the bidder's attention to specific provisions of the Contract Documents which cover the subject of the inquiry.

4.9.2 The Bidder shall review the Plans and Specifications prior to submission of his bid and shall report any errors and omissions noted by the Bidder to the District prior to such submission.

4.10 MODIFICATION OF BIDS

A Bidder may modify its Bid by written communication provided such communication is received by the District prior to the closing time for receipt of Bids. The written communication should not reveal the Bid price but should state the addition or subtraction or other modification so that the final prices or terms will not be known by the District until the sealed bid is opened.

4.11 WITHDRAWAL AND RETURN OF BIDS

Bids may be withdrawn without prejudice by written, e-mail, facsimile or telegraphic requests received from the Bidder prior to the time for opening of Bids, and Bids so withdrawn will be returned to bidders unopened. No Bid may be withdrawn after the hour affixed for opening Bids without rendering the accompanying Bid Bond subject to retention as liquidated damages in like manner as in the case of failure to execute the Contract after award, as provided in the Contract Documents. Negligence on the part of the Bidder preparing its Bid shall not constitute a right to withdraw the Bid subsequent to the opening of Bids. Any Bid received after the bid submission deadline shall be returned to the bidder unopened.

4.12 DISCREPANCIES

In the case of discrepancy between unit prices and totals, unit prices will prevail. In case of discrepancy between words and figures, words will prevail.

4.13 SERVICING AND MAINTENANCE

Each Bidder must, if requested, furnish evidence that there is an efficient service organization which regularly carries a stock of repair parts for the proposed equipment to be furnished and installed in the work and that the organization is conveniently located for prompt service.

4.14 DISQUALIFICATION OF BIDDERS

4.14.1 More than one Bid from an individual, firm, partnership or corporation under the same or different names will not be considered. Reasonable grounds for believing that any individual, firm, partnership or corporation is interested in more than one Bid for the work contemplated may cause the rejection of all Bids in which the individual, firm, partnership or corporation is interested. If there is reason for believing that collusion exists among the bidders, any or all Bids may be rejected. Bids in which the price is obviously unbalanced may be rejected.

4.14.2 All bidders are put on notice that any collusive agreement fixing the prices to be bid so as to control or affect the awarding of this Contract is in violation of the competitive bidding requirements applicable to the District, including Public Contract Code section 7106, and may render void any contract let under such circumstances.

4.15 AWARD OF CONTRACT

4.15.1 The District reserves the right to accept or reject any and all Bids during the time for awarding the Contract, and to waive any informality or irregularity in any Bid. No Bid can be withdrawn during the time for awarding the Contract. The time for awarding the Contract is provided in section 4.17.

4.15.2 Before a Bid is considered for award, the District may, in addition to the Experience Qualifications form, require a Bidder to submit a statement of facts and detail as to its business, technical organization and financial resources and equipment available and to be used in performing the work. Additionally, the District may require evidence that the Bidder has performed other work of comparable magnitude and type. The District expressly reserves the right to reject any Bid if it determines that the business and technical organization, equipment, financial and other resources or other experience of the Bidder (including the Bidder's subcontractors) is not sufficiently qualified for the work bid upon and, therefore, justifies such rejection.

4.15.2 The award of the Contract, if it is awarded, will be to the lowest responsible and responsive Bidder whose Bid complies with the requirements of the Contract Documents.

4.16 CONTRACT BONDS

4.16.1 The successful Bidder shall furnish both a Performance Bond and a Payment Bond in the type, form and amount specified in the forms included with the Contract Documents. These bonds shall be furnished on such forms or on substantially similar forms acceptable to the District. The Payment Bond shall comply with California Civil Code sections 9550 and 9554 and applicable provisions of the California Bond and Undertaking Law (California Code of Civil Procedure section 995.010 et seq.). The bonds shall be obtained from a responsible corporate surety (or sureties) acceptable to the District, who is (or are) in good standing with and duly admitted by the Insurance Commissioner of the State of California to act as surety upon bonds and undertakings. The surety (or sureties) shall furnish reports as to its financial condition from time to time as requested by the District. The premiums for the bonds shall be paid by the successful Bidder.

4.16.2 If any surety becomes unacceptable to the District, is deemed insolvent, is no longer an admitted surety in California, or fails to furnish reports as to its financial condition as requested by the District, the Contractor shall promptly furnish such additional security as may be required from time to time to protect the interests of the District and of persons supplying labor or materials in the prosecution of the work contemplated by this Contract.

4.16.3 In the event of any conflict between the terms of the Contract and the terms of the bonds, the terms of the Contract shall control and the bonds shall be deemed to be amended thereby. Without limiting the foregoing, the District shall be entitled to exercise all rights granted to it by the Contract in the event of default, without control thereof by the surety, provided that the District gives the surety notice of such default at the time or before the exercise of any such right by the District, and, regardless of the terms of the bonds, the exercise of any such right by the District shall in no manner affect the liability of the surety under the bonds.

4.17 EXECUTION OF CONTRACT

The successful Bidder will be notified in writing by the District of the award of the Contract within thirty (30) days after opening of Bids, unless the time period is extended as provided in the Invitation to Bid. Accompanying the District's notice of award will be the Contract, which the District may require to be executed in duplicate or triplicate. Within ten (10) days following receipt of such notice of award, the successful bidder will be required to execute and return the original contract(s), together with the performance and payment bonds, and the required certificates and proof of insurance documents (see sections 2.4 and 5.58), to the District. Failure to do so shall be just cause for annulment of the award and for forfeiture of the Bid Bond which shall be retained as liquidated damages, and it is agreed that the Bid Bond sum is a fair estimate of the amount of damages that the District will sustain by reason of such failure. The District will promptly determine whether such Contract, bonds and insurance are as required by the Contract Documents, and upon such determination will forward a fully executed copy of the Contract and a Notice to Proceed with the work to the successful bidder. Signature by both parties constitutes execution of the Contract. In the event of failure of the lowest responsible responsive Bidder to sign and return the Contract with acceptable bonds and insurance as prescribed herein, the District may award the Contract to the next lowest responsible responsive Bidder, and, in the event that Bidder fails to sign and return the Contract with acceptable bonds and insurance, the District may award the Contract to the then next lowest responsible responsive Bidder, etc.

4.18 RETURN OF BID GUARANTEES

All Bid Bonds will be held until the Contract has been finally executed, after which all Bid Bonds, other than any Bid Bonds which have been forfeited, will be returned to the respective bidders whose Bids they accompanied, but in no event shall non-forfeited bonds be held by the District beyond 60 days from the date that the District awards the Contract.

4.19 POWER OF ATTORNEY

The Attorney in Fact (resident agent) who executes the Performance Bond and Payment Bond on behalf of the surety company must attach a copy of his Power of Attorney as evidence of

his authority. A notary public shall acknowledge the power as of the date of the execution of the bond which it covers.

4.20 TIME OF COMPLETION

The time of completion of the work to be performed under this Contract is the essence of the Contract. Delays and extensions of time may be allowed in accordance with the provisions of the General Conditions. The time allowed for the completion of the work is stated in the Contract.

4.21 LICENSING REQUIREMENTS FOR CONTRACTORS

The Contractor shall hold such licenses as may be required by the laws of the State of California for the performance of the work specified in the Contract Documents, and shall have the following classification or type of license for the work issued by the California Contractors State License Board: Class A.

4.22 PREVAILING WAGES

Copies of the prevailing rate of per diem wages are on file at the District's office, and will be made available to any interested party on request. The Contractor shall post at each job site a copy of the determination of the Director of Industrial Relations of the prevailing rate of per diem wages. Furthermore, Contractor must post job site notices, as required by Section 1771.4(a)(2) of the Labor Code and prescribed by regulation.

4.23 BID PROTEST

4.23.1 Any bid protest must be submitted in writing to the District before 5:00 p.m. of the fifth working day following the bid opening. "Working day" as used in this section means a day that District is open for normal business, and excludes weekends and holidays observed by District. The party filing the protest must have actually submitted a timely bid for the work. A subcontractor of a bidder may not submit a bid protest. A bidder may not rely on a bid protest submitted by another bidder, but must timely file its own protest.

4.23.2 The bid protest shall be in the form of a letter or memorandum and it shall include the following: a complete statement of the basis or bases for the protest, including any supporting documents; a reference to the specific portion(s) of the Contract Documents which form(s) the basis for the protest; and, the name, address and telephone number of the person representing the protesting bidder.

4.23.3 The bidder filing the protest shall concurrently transmit a copy of the protest document and any attached documentation to all other bidders with a direct financial interest who may be adversely affected by the outcome of the protest, including all other bidders who appear to have a reasonable prospect of receiving an award depending upon the outcome of the protest.

4.23.4 The District will issue a prompt decision on the protest. If the District determines that a protest is frivolous, the party originating the protest may be determined to be irresponsible and that party may be determined to be ineligible for future contract awards.

4.23.5 The procedure and time limits set forth in this section are mandatory and are the bidder's sole and exclusive remedy in the event of a bid protest. Failure to comply with these procedures shall constitute a waiver of any right to further pursue the bid protest, including filing a Government Code claim, lawsuit or other legal proceeding.

4.23.6 For purposes of this section, a "bid protest" means any protest, objection, complaint or challenge to, concerning or against (a) a rejection of a bidder for any reason, (b) a contract award to the apparent low bidder, (c) another bidder's bid, or (d) the legality or enforceability of the bid documents.

4.24 INELIGIBLE CONTRACTORS AND SUBCONTRACTORS

The District shall not accept a bid from a bidder who is ineligible to bid or work on, or be awarded, a public works project pursuant to California Labor Code section 1777.1 or 1777.7. Bidders and the Contractor who is awarded the project contract shall not utilize, or allow work by, any subcontractor who is ineligible to bid or work on, or be awarded, a public works project pursuant to California Labor Code section 1777.1 or 1777.7. (See California Public Contract Code section 6109.) The California Division of Labor Standards Enforcement publishes a list of debarred contractors and subcontractors on the Internet at http://www.dir.ca.gov/DLSE/debar.html

4.25 AUDIT OF BID DOCUMENTS

The District shall have the right to audit all (including review, obtain and copy upon reasonable notice) documents that comprise or relate to a bidder's bid in connection with any request, claim or contention raised by any bidder, including, but not limited to, Public Contract Code Sections 4100, et seq., or 5100, et seq., or any bid protest. The term "records" and the term "documents" as used herein shall include, but not be limited to, original estimates, subcontracts, bids, proposals, purchase orders, books, documents, accounting records, papers, correspondence, project files and scheduling information, including the original Bid and all documents related thereto and to its preparation, the as-planned construction schedule and any related documents.

4.26 SUBSTITUTIONS DURING BIDDING

Manufacturers or suppliers of materials and equipment may offer an alternative product to the Contractor, except where alternatives or substitutes are specifically excluded, and request that alternatives to specified products be considered equal. Inclusion of such alternatives in the bid is the responsibility of the Contractor. Inclusion should only be considered if the Contractor believes the offered alternative is equal in quality and performance to the specified product. After award of the Contract, such offers of alternative products will be reviewed and processed as a substitution as provided under General Conditions section 5.25 (Trade Names and Alternatives). Inclusion or offers of alternative products will not be reviewed or processed during the bidding period.

5 GENERAL CONDITIONS

5.1 INTENT OF CONTRACT DOCUMENTS/MEANS AND METHODS

5.1.1 The intent of the Contract Documents is to prescribe the details for the construction and completion of the work which the Contractor undertakes to perform in accordance with the terms of the Contract. Where the Specifications and Plans describe portions of the work in general terms, but not in complete detail, it is understood that only the best general practice is to prevail and that only materials and workmanship of the first quality are to be used. Unless otherwise specified, the Contractor shall furnish all labor, materials, tools, equipment and incidentals and do all the work involved in performing the Contract in a satisfactory and workmanlike manner.

5.1.2 The technical specifications are presented in sections for convenience. However, this presentation does not necessarily delineate trades or limits of responsibility. All sections of the Specifications and Plans are interdependent and applicable to the project as a whole.

5.1.3 The Contract Documents are complementary, and what is called for in any one shall be as binding as if called for in all.

5.1.4 It is expressly stipulated that the drawings, specifications and other Contract Documents set forth the requirements as to the nature of the completed work and do not purport to control the method of performing work except in those instances where the nature of the completed work is dependent on the method of performance.

5.1.5 Except as provided elsewhere in the Contract Documents, neither the District nor the Engineer will be responsible for or have control or charge of construction means, methods, techniques, sequences or procedures, or for safety precautions and programs in connection with the work. Except as provided elsewhere in the Contract Documents, neither the District nor the Engineer will be responsible for or have control or charge over the acts or omissions of the Contractor, or any of their subcontractors, agents or employees, or any other persons performing any of the work. Any general control of the work exercised by the District or its authorized representatives shall not make the Contractor an agent of the District, and the liability of the Contractor for all damages to persons and/or to public or private property arising from the Contractor's execution of the work shall not be lessened because of such general control.

5.2 CONTRACTOR'S UNDERSTANDING

It is understood and agreed that the Contractor has, by careful examination, satisfied itself as to the nature and location of the work, the conformation of the ground, the character, quality and quantity of the materials to be encountered, the character of equipment and facilities needed preliminary to and during the prosecution of the work, the general and local conditions, and all other matters which can in any way affect the work under this Contract. No verbal agreement or conversation with any officer, agent or employee of the District, either before or after the execution of this Contract, shall affect or modify any of the terms or obligations herein contained.

5.3 CHANGES IN THE WORK

5.3.1 The District reserves the right to make such alterations, deviations, additions to, deletions or omissions from the plans and specifications, including the right to increase or decrease the quantity of any item or portion of the Work, as may be deemed by the Engineer to be necessary or advisable and to require such extra work as may be determined by the Engineer to be required for the proper completion or construction of the whole work contemplated. Such changes, no matter how many, shall be within the contemplation of this Contract and shall not be the basis for a compensable delay or a claim for lost profits.

5.3.2 The Engineer shall have the authority to order minor changes in the work not involving any increase or decrease in the Contractor's cost of, or time required for, performance of the Contract. Such minor changes shall be effected by written order of the Engineer, and the Contractor shall carry out such written orders promptly. If the Contractor disagrees with the Engineer's determination that the minor change does not involve any increase or decrease in the Contractor's cost of, or time required for, performance of the Contract, then the Contractor may file and pursue a claim pursuant to section 5.5. The written claim must be submitted to the Engineer within 15 days after the date of the Engineer's written order. If the Contractor believes that any such work is beyond the scope of the contract documents, the Contractor shall provide a written "Daily Extra Work Report" documenting the alleged extra work, which will be submitted to and verified by the Engineer or the District's representative at the end of the day the work was performed.

5.3.3 If any change in the work ordered by the Engineer causes an increase or decrease in the Contractor's cost of, or time required for, performance of the Contract, an adjustment and modification of the Contract will be made in the form of a Change Order which will set forth (a) the changes, additions and/or deductions in the work to be done, (b) the increase or decrease in compensation due the Contractor, if any, or the method by which the increase or decrease, if any, will be calculated, and (c) the adjustment in the time of completion of the work, if applicable. A Change Order may be issued to the Contractor at any time.

5.3.4 The compensation to be paid for any work addressed in a Change Order shall be determined in one or more of the following ways as shown in the Change Order:

a. By unit prices;

b. By an agreed-upon lump sum; or

c. By the cost-plus basis determined pursuant to section 5.3.9.

5.3.5 Contractor shall keep full and complete records of the cost of any work addressed in a Change Order in the form and manner prescribed by the Engineer and shall permit the Engineer to have access to such records as may be necessary to assist in the determination of the compensation payable for such work.

5.3.6 With respect to a Change Order involving the deletion or reduction of work, the Engineer shall determine the appropriate reduction in the Contract price based on the lump sum and/or per unit prices in the bid schedule for the items of work deleted or

reduced by the Change Order. The Contractor shall not be entitled to claim damages for anticipated profits on any portion of the work that may be deleted.

5.3.7 Upon receipt of a Change Order signed by the Engineer, the Contractor shall forthwith proceed with the ordered work, unless otherwise directed by the Engineer. If the Contractor agrees with the terms and conditions of the Change Order, then it shall sign the Change Order.

5.3.8 Should the Contractor disagree with any terms or conditions set forth in a proposed Change Order, it shall submit a written protest to the Engineer within 15 days after the receipt of the proposed Change Order. The protest shall state the points of disagreement, addressing, if applicable, the quantities and cost involved and the adjustment of time for completion.

5.3.8.1 If a written protest is not timely submitted by the Contractor, then the proposed Change Order, including all cost and time adjustment provisions, if any, that was submitted to the Contractor shall be deemed final and acceptable to the Contractor even if not signed by the Contractor. Any payment under an unprotested Change Order's cost adjustment provisions shall constitute full compensation for all work included in or required by the Change Order.

5.3.8.2 If the Contractor timely protests a proposed Change Order, it shall nevertheless proceed with the ordered work pending resolution of the protest.

5.3.8.3 If the Contractor timely protests a proposed Change Order, the Engineer shall render in writing its determination of the protest within fifteen (15) days. If the Contractor disputes the determination, then the Contractor may file and pursue a claim pursuant to section 5.5. The written claim must be submitted to the Engineer within 15 days after the date of the Engineer's written determination on the protest. If the Contractor does not timely file a claim, then the proposed Change Order (as may have been revised by the Engineer's determination on the protest), including all cost and time adjustment provisions, if any, shall be deemed final and acceptable to the Contractor even if not signed by the Contractor. Any payment under such a Change Order's cost adjustment provisions shall constitute full compensation for all work included in or required by the Change Order.

5.3.8.4 If the Contractor refuses to accept a Change Order, the District may issue it unilaterally. The Contractor shall comply with the requirements of the Change Order. The District shall provide for an equitable adjustment to the Contract, and compensate the Contractor accordingly. If the Contractor does not agree that the adjustment is equitable, it may submit a claim in accordance with section 5.5.

5.3.9 The following shall constitute the cost-plus basis of payment:

5.3.9.1 Charges for all of the labor furnished and used by the Contractor shall be made for manual classifications up to and including general foreman. It will not include charges for assistant superintendents, superintendents, office personnel, timekeepers and maintenance mechanics. The time charged to work shall be subject to the daily approval of the Engineer and evidence of such approval shown on approved Daily Extra Work Reports shall

be submitted with the billing. (See sample Extra Daily Work Report attached to Specification [specification number].) Labor rates used to calculate the costs shall be those basic wages including current employer contributions for fringe benefits and federal and state surcharges and including applicable subsistence and travel allowances, all as actually paid to workers under collective bargaining agreements or as a regular practice of the employer. No time or charges will be allowed except when the workers are actually engaged in the proper, efficient and diligent performance or completion of the work as authorized. Overtime shall not be worked without prior approval of the Engineer.

5.3.9.2 Charges for the rental and operation of the equipment furnished and used by the Contractor shall be made for all prime construction and automotive equipment. It shall not include charges for listed equipment or major tools with a new cost of $500 or less. Equipment time charges shall be itemized on a Daily Extra Work Report, subject to the daily approval of the Engineer and evidence of such daily approval shall be submitted with the billing. The equipment rental and operation rates used shall be those agreed upon by the Engineer and the Contractor prior to commencement of the work and shall include an approved allowance for depreciation. The cost for each type of approved equipment (active or standby) shall be no greater than the amount allowed in the latest edition of the Caltrans Standard Equipment Rates. Time and charges shall be allowed only when equipment is actually being used for the proper and efficient performance or completion of the work as authorized.

5.3.9.3 Charges for the cost of materials furnished by the Contractor shall be made, provided such furnishing was specifically authorized in the work order and the actual use verified by the Engineer. Charges shall be net cost to the Contractor delivered at the job, including all applicable sales taxes; and a vendor's invoice must accompany the billing along with verification of use of such materials by the Engineer.

5.3.9.4 A charge for major tools, supplies, overhead, supervision and profit will be allowed in the amount of 15% of the total direct labor costs, equipment costs, and material costs, as defined in sections 5.3.9.1 to 5.3.9.3.

5.3.9.5 When all or any part of work is performed by any of the Contractor's subcontractors, the markup percentage established in section 5.3.9.4 shall be applied to the subcontractor's actual cost of such work (as determined in sections 5.3.9.1 to 5.3.9.3), to which a markup of 5% on the subcontracted portion of the extra work may be added by the Contractor.

5.3.10 Lump sum change orders shall include all work and costs associated with the change work item(s) and shall be agreed to and signed by both the Contractor and the District prior to commencing the work.

5.3.10.1 A charge for major tools, supplies, overhead, supervision and profit will be allowed an amount no greater than 15% of the total direct labor, equipment, and material costs.

5.3.10.2 When all or any part of work is performed by any of the Contractor's subcontractors, the markup percentage established in section 5.3.10.1 shall be applied

to the subcontractor's actual cost of such work, to which a markup of no greater than 5% on the subcontracted portion of the extra work may be added by the Contractor.

5.3.11 The consent of the Contractor's bond sureties shall not be required as to any change or extra work ordered by the District, and the liability of the Contractor's bonds and sureties shall be increased or decreased accordingly without notice to the sureties.

5.3.12 The District reserves the right to contract with any person or firm other than the Contractor for any or all extra work.

5.3.13 If the total pay quantity of any item of work required under the Contract to be paid at a unit price exceeds the item as bid by more than 25 percent, then in the absence of an executed contract change order specifying the compensation to be paid, the work in excess of 125 percent of such estimate may, at the District's discretion, be paid for by a cost plus basis of payment as described at section 5.3.9, instead of at the unit price.

5.3.14 Any extra work related to differing site conditions pursuant to Public Contract Code section 7104 shall be addressed in accordance with section 5.51.8.5 of these General Conditions. No claim of the Contractor under this clause shall be allowed unless the Contractor has promptly given the notice required before any such claimed conditions are disturbed.

5.4 ADJUSTMENTS FOR PRICE INCREASES

5.4.1 Prior to submitting a bid, the Contractor shall review all market conditions that could reasonably have an effect on or cause changes in unit pricing. Such conditions shall include proposed or effective tariff rates, supply chain disruptions, labor costs, currency fluctuations, or other market factors. Contractor's bid shall take all such market conditions into account, and Contractor shall not be entitled to any adjustment in the Contract amount based on their existence.

5.4.2 If, after the date of Contractor's bid submission, Contractor identifies an unanticipated market condition that directly and materially affects the unit pricing or availability of materials or equipment required for the Work, and such increases are unavoidable by sourcing from other suppliers as discussed below, Contractor shall be entitled to an adjustment to the Contract amount subject to the conditions and limitations set forth in this section 5.4.

5.4.3 Upon learning of a market condition that directly and materially affects the unit pricing or availability of materials or equipment required for the Work, Contractor shall make commercially reasonable efforts to avoid the new costs and mitigate any increased costs to District. Contractor shall, without limitation, determine if there are alternate suppliers that can furnish necessary materials or equipment at a lower cost to Contractor, for example, by sourcing materials or equipment from the United States, or a country subject to lower duties than the Contractor's original intended supplier. If Contractor is able to identify a lower cost supplier through such efforts, Contractor shall procure supplies from that source before seeking an adjustment in the Contract amount. Any adjustment to the Contract amount shall be based on actual increased costs incurred by Contractor despite such efforts.

5.4.4 Contractor may only obtain an adjustment to the Contract amount if its request is supported by the bid documents it submitted in compliance with the requirements of the Invitation to Bid. If the bid documents reflect that Contractor already accounted for a market condition that affects the unit pricing or availability of materials or equipment through a contingency or reserve that was part of the Contractor's bid, Contractor will not be entitled to a price adjustment.

5.4.5 Adjustment - Contractor shall notify Owner in writing within fourteen (14) calendar days after Contractor becomes aware or should reasonably have become aware of an unanticipated new market condition that may entitle Contractor to an adjustment to the Contract amount.

5.4.5.1 Contractor's request for adjustment shall include: identification of the specific materials or equipment affected; documentation of the original cost of the affected materials or equipment as included in Contractor's bid; documentation of the increased cost directly attributable to the unanticipated new market condition; documentation demonstrating that Contractor could not have anticipated and planned for the cost increase before submitting its bid and is eligible for an adjustment under this section; documentation of compliance with the requirements of this section, including Contractor's efforts to identify and contract with alternate suppliers (subject to compliance with the requirements of Section 5.25 of these General Conditions); and the proposed adjustment to the Contract amount.

5.4.5.2 Prior to agreeing to any adjustment to the Contract amount, Owner shall have the right to audit Contractor's books, records, documents, and other evidence pertaining to the request for adjustment to verify that all conditions precedent to a price adjustment have been met. Contractor shall maintain all such records for a period of not less than three (3) years after final payment under this Contract.

5.4.5.3 Owner reserves the right to reject or reduce any request for adjustment that does not meet the requirements of this section 5.4 or is not substantiated by sufficient documentation. The parties agree that any adjustment to the Contract amount shall be limited to half of the actual increased cost directly attributable to the new market condition, without any additional markup for overhead and profit. In effect, the parties agree to split prorata such actual increased costs. After Contractor's share of the actual costs are determined, the Engineer shall submit a Change Order that reflects the lumpsum change in the Contract amount.

5.4.5.4 Nothing in this section 5.4 shall be construed to relieve Contractor of its obligation to complete the Work within the Contract Time or to entitle Contractor to any time extension due to an unanticipated new market condition.

5.5 CLAIMS AND RESOLUTION OF DISPUTES

5.5.1 General. The parties intend by this section 5.5 that differences between the parties, arising under the Contract, be brought to the attention of the Engineer at the earliest possible time in order that such matters may be settled, if possible, or other appropriate action promptly taken. The parties agree to initially strive to resolve all disputes amicably and in an informal manner. Any dispute resolved informally shall be documented by the

Engineer, and if the dispute resolution involves a change in the contract work, increase or decrease in the compensation due the contractor, or adjustment in the time of completion of the Work, then the informal dispute resolution shall be confirmed by a Change Order pursuant to section 5.3. Informal discussions or negotiations with the Engineer concerning informal resolution of a dispute shall not toll or suspend the claim filing and other deadlines provided below, unless so provided by the Engineer in writing. The willingness of the Engineer to engage in any such discussions is not a waiver of the District's right to deny a claim or dispute it based on lack of merit, or procedural deficiency, or both.

5.5.2 Compliance Required. Contractor shall not be entitled to any additional time to complete Work or to the payment of any additional compensation for claimed extra work (or otherwise on account of any claim, cause, act, failure to act, or happening of any event or occurrence) unless either District has issued a Change Order pursuant to section 5.3 or a claim has been timely filed and approved pursuant to this section 5.5. If the Contractor fails to file a written claim within the claim deadline of section 5.5.4, then the Contractor agrees that it has waived any right or remedy to thereafter pursue the claim against the District in any administrative, arbitration or litigation proceeding, and the District may elect to document this waiver.

5.5.3 Scope of Claims. A claim for purposes of this section 5.5 means a separate demand by the Contractor for (a) a time extension (including a demand for relief from damages or penalties for delay assessed by the District under the Contract), (b) payment of money or damages arising from work done by, or on behalf of, the Contractor pursuant to the Contract and payment of which is not otherwise expressly provided for or the Contractor is not otherwise entitled to, or (c) an amount the payment of which is disputed by the District.

5.5.4 Filing of Contract Claim; Contents; Filing Deadline

5.5.4.1 The Contractor shall file any "Contract Claim" with the Engineer. A Contract Claim must (a) be in writing, (b) be labeled or clearly indicated as a claim under the Contract, (c) set forth in detail the reasons why the Contractor believes additional compensation or a time extension is or may be due, the nature of the costs involved, and, insofar as possible, the amount of the claim, and (d) include (or reference earlier provided) documents that support and substantiate the claim as to both entitlement and quantification of time, money, or both.

5.5.4.2 A Contract Claim must be submitted to the Engineer within the following claim filing deadlines: (a) if a deadline is set forth in the Contract Documents for filing of the particular claim, then the claim must be filed by the specified time; (b) if the claim relates to extra, additional or unforeseen work for which the Contractor intends to demand additional compensation, a time extension, or both, notice shall be given to the Engineer prior to the time that the Contractor commences performance of the work giving rise to the potential claim for additional compensation or time extension, and Contractor shall not proceed with that work until so directed by the Engineer; and (c) for all other claims not included within (a) or (b), the claim must be filed on or before 15 days after the date of the occurrence, event or circumstance giving rise to the claim. In no event shall a Contract Claim be filed later than the date of final payment.

5.5.5 Processing of Claims, Generally. This Contract provides for three types of Contract Claims, which will be processed and resolved under different subsections. Any claim for money or damages of $375,000 or less or for a time extension (i.e., any claim subject to Public Contract Code section 20104) shall be processed and resolved in accordance with section 5.5.6. Any claim for money or damages of more than $375,000 (i.e., any claim not subject to Public Contract Code section 9204 or 20104) shall be processed and resolved in accordance with section 5.5.7. Any Contract Claim sent to District by registered mail or certified mail with return receipt requested (i.e., any claim subject to Public Contract Code section 9204) shall be processed and resolved pursuant to section 5.5.8.

Note that Public Contract Code section 9204 will sunset on January 1, 2027, unless extended or made permanent by the Legislature.

5.5.6 Claims for $375,000 or Less or for Time Extension

5.5.6.1 Application. This section applies to all claims for $375,000 or less in value, including any claim for a time extension or for a time extension that includes claimed delay damages of $375,000 or less.

5.5.6.2 District Response to Contract Claim. The Engineer shall respond in writing to the Contract Claim within 60 days of receipt of the claim (or within 45 days of receipt for claims of less than $50,000), or may request, in writing, within 30 days of receipt of the claim, any additional documentation supporting the claim or relating to defenses to the claim the District may have against the Contractor. If additional information is thereafter required, it shall be requested and provided pursuant to this subsection, upon mutual agreement of the Engineer and the Contractor. The Engineer's written response to the claim, as further documented, shall be submitted to the Contractor within 30 days after receipt (or 15 days after receipt for claims of less than $50,000) of the further documentation, or within a period of time no greater than that taken by the Contractor in producing the additional information or requested documentation, whichever is greater. The District shall not fail to pay money as to any portion of a Contact Claim that is undisputed except as otherwise provided in the Contract Documents.

5.5.6.3 Meet and Confer. If the Contractor disputes the Engineer's written response, or the Engineer fails to respond within the time prescribed, the Contractor may notify the District, in writing, either within 15 days of receipt of the Engineer's response or within 15 days of the Engineer's failure to respond within the time prescribed, respectively, and demand an informal conference to meet and confer for settlement of the issues in dispute. Upon such a demand, the District shall schedule a meet and confer conference within 30 days for the parties to consider settlement of the dispute. If the Contractor fails to timely demand a meet and confer conference within the applicable 15-day period, then the Contractor shall be deemed not to dispute the Engineer's written response to the Contract Claim and the Engineer's decision on the Contract Claim shall be final, conclusive and binding, and the Contractor shall be deemed to have waived all its rights to further protest, judicial or otherwise.

5.5.6.4 Government Code Claim. Following the meet and confer conference, if the Contract Claim or any portion remains in dispute, the Contractor may file a Government Code Claim as provided in Government Code title 1, division 3.6, part 3, chapters

1 (commencing with section 900) and 2 (commencing with section 910). The running of the period of time within which Contractor must file a Government Code Claim shall be tolled from the time the Contractor submits a timely Contract Claim pursuant to section 5.5.4 until the time that the Contract Claim is denied as a result of the meet and confer process, including any period of time utilized by the meet and confer process. The District shall respond to any Government Code Claim in accordance with the Government Claims Act.

5.5.6.5 Lawsuit. If the claim is not resolved pursuant to section 5.5.6.4, the Contractor may file a lawsuit on the claim within the limitations period provided by the Government Claims Act. If the Contractor fails to timely file a lawsuit within the limitations period of the Government Claims Act, then the District's response to the Government Code Claim shall be final, conclusive and binding on the Contractor, and the Contractor thereafter shall be barred from filing a lawsuit on the claim.

5.5.6.6 Mediation. If the Contractor timely files a lawsuit, then within 60 days, but no earlier than 30 days, following the filing of responsive pleadings, the court shall submit the matter to non-binding mediation (unless waived by mutual stipulation of both parties). The mediation process shall provide for the selection within 15 days by both parties of a disinterested third person as mediator, shall be commenced within 30 days of the submittal, and shall be concluded within 15 days from the commencement of the mediation unless a time requirement is extended upon a good cause showing to the court or by stipulation of both parties. If the parties fail to select a mediator within the 15-day period, any party may petition the court to appoint the mediator. The mediator's fees and expenses shall be split and paid equally between the parties. The court may, upon request by any party, order any witnesses to participate in the mediation process.

5.5.6.7 Arbitration. If the matter remains in dispute following the mediation or if the parties waive the mediation, then the case shall be submitted to judicial arbitration pursuant to Code of Civil Procedure part 3, title 3, chapter 2.5 (commencing with section 1141.10), notwithstanding section 1141.11 of that code. The Civil Discovery Act of 1986 (Code of Civil Procedure part 4, title 3, chapter 3, article 3 (commencing with section 2016.010)) shall apply to any proceeding brought under this subdivision consistent with the rules pertaining to judicial arbitration. The arbitrator shall be experienced in public works construction law. The arbitrator's fees and expenses shall be split and paid equally by the parties, except where the arbitrator, for good cause, determines a different division. The court may, upon request by any party, order any witnesses to participate in the arbitration process. Any party who, after receiving an arbitration award, requests a trial de novo but does not obtain a more favorable judgment shall (in addition to payment of any costs and fees under Code of Civil Procedure part 3, title 3, chapter 2.5 (commencing with section 1141.10)) pay the attorney's fees of the other party arising out of the trial de novo.

5.5.6.8 Interest. In any lawsuit filed under this subsection, District shall pay interest at the legal rate on any arbitration award or judgment. The interest shall begin to accrue on the date the lawsuit is filed in court.

5.5.7 Claims for More Than $375,000

5.5.7.1 Application. This section applies to all claims that exceed $375,000 in value, including any claim for time extension that includes claimed delay damages exceeding $375,000.

5.5.7.2 District Response to Contract Claim. The Engineer shall respond in writing to the Contract Claim within 60 days of receipt of the claim, or may request, in writing, within 30 days of receipt of the claim, any additional documentation supporting the claim or relating to defenses to the claim that the District may have against the Contractor. If additional information is thereafter required, it shall be requested and provided pursuant to this subsection, upon mutual agreement of the Engineer and the Contractor. The Engineer's written response to the claim, as further documented, shall be submitted to the Contractor within 30 days after receipt of the further documentation. If the Contractor fails to timely dispute the Engineer's decision on the matter in accordance with section 5.5.7.3, then the Contractor shall be deemed not to dispute the Engineer's written response to the Contract Claim and the Engineer's decision shall be final, conclusive and binding, and the Contractor shall be deemed to have waived all its rights to further protest, judicial or otherwise.

5.5.7.3 Government Code Claim. If the Contractor disputes the Engineer's written response to the Contract Claim, the Contractor may file a Government Code Claim as provided in Government Code title 1, division 3.6, part 3, chapters 1 (commencing with section 900) and 2 (commencing with section 910). District shall respond to any Government Code Claim in accordance with the California Government Claims Act.

5.5.7.4 Lawsuit. If the claim is not resolved pursuant to section 5.5.7.3, the Contractor may file a lawsuit on the claim within the limitations period provided by the Government Claims Act. If the Contractor fails to timely file a lawsuit within the limitations period of the Government Claims Act, then the District's response to the Government Code Claim shall be final, conclusive and binding on the Contractor, and the Contractor thereafter shall be barred from filing a lawsuit on the claim.

5.5.7.5 Judicial Reference. If the Contractor timely files a lawsuit, the case shall be submitted to judicial reference pursuant to California Code of Civil Procedure sections 638 and 640 through 645.1 (or any successor statute) and California Rules of Court title 3, division 9 (commencing with section 3.900). As authorized by Code of Civil Procedure section 638, a referee will consider and decide all factual and legal issues in the action. Each party acknowledges that it will not have any right to a jury trial or to have any judicial officer besides the referee hear or decide the action. When Contractor initiates the superior court lawsuit, it will, at the same time it files the complaint in the action, also file a motion for appointment of a single referee.

(a) Appointment of a referee shall be by mutual agreement within 30 days between the parties, and if unsuccessful, then by the court and will be governed by Code of Civil Procedure section 640, and subject to objection by either party as provided by Code of Civil Procedure section 641. The referee must be a retired judge or a licensed attorney with at least ten years substantive experience in public works construction matters.

(b) The parties shall be entitled to discovery and the referee shall oversee discovery and may enforce all discovery orders in the same manner as a superior court judge. The referee shall have the authority to consider and rule on appropriate pre-hearing and post-hearing motions in the same manner as a superior court judge. The referee will have the authority to set a briefing and hearing schedule for any such motion or for a hearing on the merits.

(c) The referee's statement of decision shall include findings of fact and conclusions of law. The statement of decision will stand as the decision of the superior court and, upon filing of the statement with the clerk of the court, judgment may be entered pursuant to Code of Civil Procedure section 644, subsection (a). The parties will have rights to appeal the final judgment so entered.

(d) Each party will pay half of the costs of the referee and the administrative fees of the reference proceeding, and each party will bear its own costs, expenses and attorney fees for the reference proceeding.

5.5.8 Claims Subject to Public Contract Code section 9204

5.5.8.1 The Contract Claim will be processed and resolved pursuant to Public Contract Code section 9204, which is summarized here:

(a) District Review of Claim. Within 45 days after receiving a complete Contract Claim, District shall review the claim and provide the Contractor a written statement identifying what portion of the claim is disputed and what portion is undisputed. District will pay any undisputed portion of the claim within 60 days from the date of the written statement. If District fails to timely issue a written statement, the claim shall be deemed rejected in its entirety.

(b) Meet and Confer Conference. If the Contractor disputes the District's written statement or if the Contract Claim is deemed rejected, the Contractor may demand and the parties will conduct an informal conference to meet and confer regarding settlement in accordance with section 9204, subsection (d)(2). Within 10 business days following the conclusion of the meet and confer conference, District shall provide Contractor a written statement identifying the portion (if any) of the claim remaining in dispute and any undisputed portion will be paid by District within 60 days after this written statement.

(c) Non-Binding Mediation. Any remaining disputed portion of the claim shall be submitted to nonbinding mediation in accordance with section 9204, subsection (d)(2).

(d) Interest. Any amount not paid in a timely manner as required by this subsection shall bear interest at a rate of 7 percent per annum until paid.

The foregoing is a summary of section 9204. In the event of any conflict between the summary and section 9204, the statute will govern.

5.5.8.2 Lawsuit and Reference. If mediation is unsuccessful and all or parts of the Contract Claim remain in dispute, then the Contractor may pursue a lawsuit (with judicial reference) in accordance with the procedures set forth at sections 5.5.7.4 through 5.5.7.5.

5.5.9 Contract Work Pending Claim Resolution. Unless otherwise directed in writing by the Engineer, pending resolution of a claim under this section 5.5, the Contractor shall continue to diligently prosecute the Contract work in accordance with the Contract Documents and the instructions of the Engineer.

5.5.10 Tort Claims. The provisions of this section 5.5 apply only to contract-based claims and they shall not apply to tort claims, and nothing in this section 5.5 is intended nor shall be construed to change the time periods for filing tort claims or actions specified by Government Code title 1, division 3.6, part 3, chapters 1 (commencing with section 900) and 2 (commencing with section 910).

5.6 GUARANTEE

5.6.1 In addition to warranties, representations and guarantees stated elsewhere in the Contract Documents, or implied-in-fact or in-law, the Contractor unconditionally guarantees all materials and workmanship furnished hereunder, and agrees to repair or replace or both at its sole cost and expense, and to the satisfaction of the Engineer and the District, any and all materials which may be defective or improperly installed.

5.6.2 The Contractor shall repair or replace to the satisfaction of the Engineer any or all such work that may prove defective in workmanship or materials, ordinary wear and tear excepted, together with any other work which may be damaged or displaced in so doing. Contractor shall leave the site of any such repair or replacement work in satisfactory working order and condition.

5.6.3 In the event of failure to comply with the above stated conditions within a reasonable time, the District is authorized to have the defect repaired and made good at the expense of the Contractor who will pay the costs and charges therefor immediately upon demand, including any reasonable management and administrative costs, and engineering, legal and other consultant fees incurred to enforce this section.

5.6.4 The signing of the Contract by the Contractor shall constitute execution of the above guarantees. Except as otherwise provided in this Contract, the guarantees and warranties shall remain in effect for one year from the date of recording a notice of completion. The District shall have the right to call for such inspection or inspections of the work before the end of the one-year guarantee period and Contractor shall attend and participate in such inspection(s) upon request of the District. This guarantee does not excuse the Contractor from breaches of contract causing defects that occur or are discovered more than one year after the notice of completion. In addition, the warranty and guaranty period for repaired or replaced work or part shall be one year from the date of acceptance of said repaired or replaced work or part, but not less than the remaining warranty period of the original work.

5.7 AUTHORITY OF THE ENGINEER

5.7.1 The Engineer is the representative of the District and has full authority to interpret the Contract Documents, to conduct the construction review and inspection of the Contractor's performance, and to decide questions which arise during the course of the work; and its decisions on these matters shall be final and conclusive. The Engineer has the authority to reject all work and materials that do not conform to the Contract Documents, and has the authority to stop the work whenever such stoppage may be necessary to insure the proper execution of the Contract.

5.7.2 If at any time the Contractor's work force, tools, plant or equipment appear to the Engineer to be insufficient or inappropriate to secure the required quality of work or the proper rate of progress, the Engineer may order the Contractor to increase their efficiency, improve their character, to augment their number or to substitute other personnel, new tools, plant or equipment, as the case may be, and the Contractor shall comply with such order. Neither the failure of the Engineer to demand such increase of efficiency, number, or improvement, nor the compliance by the Contractor with the demand, shall relieve the Contractor of its obligation to provide quality work at the rate of progress necessary to complete the work within the specified time.

5.7.3 The Engineer shall have the authority to make minor changes in the work, not involving extra costs, and not inconsistent with the purposes of the work.

5.7.4 Any order given by the Engineer, not otherwise required by the Contract Documents to be in writing shall, on request of the Contractor, be given or confirmed by the Engineer in writing.

5.7.5 Whenever work, methods of procedure, or any other matters are made subject to direction or approval, such direction or approval will be given by the Engineer.

5.8 DRAWINGS

5.8.1 Drawings furnished herewith are for bidding purposes. The Engineer will furnish the Contractor, free of charge, copies of full-size Drawings which are reasonably necessary for the execution of the work. The Contractor shall have no claim for excusable delay on account of the failure of the Engineer to deliver such Drawings unless the Engineer shall have failed to deliver the same within two weeks after receipt of written demand therefor from the Contractor. If the Contractor, in the course of the work, finds any discrepancy between the Drawings and the physical condition of the locality, or any errors or omissions in the Drawings, or in the layout as given by points and instructions, it shall be its duty to inform the Engineer in writing, and the Engineer will promptly verify the same. Any work done after such discovery, until authorized, will be done at the Contractor's risk. All Drawings, Specifications, and copies thereof furnished by the Engineer are the property of the Engineer and shall not be reused on other work and, with the exception of the signed Contract sets, are to be returned to it, on request, at the completion of the work. All models are the property of the District.

5.8.2 The Contractor shall maintain at the site of work one record copy of the Drawings, in good order, and available to the Engineer. The Contractor shall mark the

Drawings to record all changes and corrections made during construction. The Contractor shall make all corrections and changes on the Drawings as necessary to produce accurate and complete record Drawings showing the "as built" work. Marked Drawings shall be updated at least weekly. The Contractor shall submit to the Engineer a final, complete and accurate set of record Drawings prior to or simultaneously with the Contractor's request for final payment.

5.8.3 The Drawings shall be supplemented by such shop drawings prepared by the Contractor as are necessary to adequately control the work. Contractor shall not make any changes in any shop drawings after they have been reviewed by the Engineer.

5.8.4 Shop drawings for any structure shall include, but not be limited to: stress sheets, anchor bolt layouts, shop details, and erection plans, which shall be reviewed and approved by the Engineer before any such work is performed.

5.8.5 Shop drawings will be required for cribs, cofferdams, falsework, centering and form work and for other temporary work and methods of construction the Contractor proposes to use. Such drawings shall be subject to the review and approval of the Engineer insofar as the details affect the character of the finished work, but details of design will be left to the Contractor who shall be responsible for the successful construction of the work.

5.8.6 Contractor agrees that shop drawings processed by the Engineer are not Contract Change Orders, and that the purpose of shop drawings submitted by the Contractor is to demonstrate to the Engineer that the Contractor understands the design concept, and to demonstrate its understanding by indicating which equipment and material it intends to furnish and by detailing the fabrication methods it intends to use.

5.8.7 It is expressly understood, however, that favorable review of the Contractor's shop drawings shall not relieve the Contractor of any responsibility for accuracy of dimensions and details, or for mutual agreements of dimensions and details. It is mutually agreed that the Contractor shall be responsible for agreement and conformity of its shop drawings with the Specifications. Contractor further agrees that if deviations, discrepancies or conflicts between shop drawings and Specifications are discovered either prior to or after shop drawings are processed by the Engineer, the Specifications shall control and shall be followed.

5.8.8 Unless otherwise stated, the Engineer shall have 30 days from the date of receipt of shop drawings for review.

5.8.9 Full compensation for furnishing all shop drawings shall be considered as included in the prices paid for the Contract items of work to which such drawings relate and no additional compensation will be allowed therefor. Any cost related to the Engineer's review of any particular set of shop drawings more than twice, due to incompleteness or unacceptability, shall be borne by the Contractor, and the District reserves the right to withhold such costs from payments due the Contractor.

5.9 CONSTRUCTION STAKING AND SURVEYS

[Alternate A (by District)]

The District will provide one set of construction stakes and benchmarks as it deems necessary to establish lines and grades required for the completion of the site work specified in the Contract Documents. The Contractor shall notify the Engineer at least two working days in advance of required staking. The Contractor shall make all other surveys necessary for the completion of the work.

Stakes and marks set by the District or Engineer shall be carefully preserved by the Contractor. The Contractor shall be charged for the cost of replacing or restoring the stakes and marks that are destroyed or damaged by its operation. This charge will be deducted from any monies due or to become due to the Contractor under the Contract.

[Alternate B (by Contractor)]

The Engineer will provide the Contractor with drawings showing benchmarks and reference points as it deems necessary to establish lines and grades required for the completion of the site work specified in the Contract Documents. The Contractor shall make or furnish all surveys and set all construction stakes necessary for the completion of the work.

Stakes and marks set by the District or Engineer, if any, shall be carefully preserved by the Contractor. The Contractor shall be charged for the cost of replacing or restoring the stakes and marks that are destroyed or damaged by its operation. This charge will be deducted from any monies due or to become due to the Contractor under the Contract.

5.10 PERMITS AND REGULATIONS

5.10.1 Permits and licenses, of a temporary nature, necessary for the prosecution of the work shall be secured and paid for by the Contractor. Permits, licenses and easements for permanent structures or permanent changes in existing facilities shall be secured and paid for by the District unless otherwise specified.

5.10.2 The Contractor shall give all notices and comply with all laws, ordinances, rules and regulations bearing on the conduct of the work as shown on the plans and described in the Specifications. The Contractor shall promptly notify the Engineer in writing of any specification at variance therewith and any necessary changes shall be adjusted as provided in the Contract for changes in the work. If the Contractor performs any work knowing it to be contrary to such laws, ordinances, rules, and regulations and without such notice to the Engineer, it shall bear all costs arising therefrom.

5.11 CONFORMITY WITH CONTRACT DOCUMENTS

Work and materials shall conform to the lines, grades, cross sections, dimensions and material requirements, including tolerances, shown on Contract Documents. Although

measurement, sampling, and testing may be considered evidence as to such conformity, the Engineer shall be the sole judge as to whether the work or materials deviate from the Specifications and plans, and his decision as to any allowable deviations therefrom shall be final and conclusive.

5.12 COORDINATION & INTERPRETATION OF CONTRACT DOCUMENTS

5.12.1 The Contract Documents are complementary and a requirement occurring in one is as binding as though occurring in all.

5.12.2 In the event of conflict between the Plans and the Specifications, the Specifications shall govern, except that, where items are shown on the Plans and are not specifically included in the Specifications, the Plans shall govern.

5.12.3 Should it appear that the work to be done or any of the matters relative thereto are not sufficiently detailed or explained in the Specifications and Plans, the Contractor shall apply to the Engineer for such further explanations as may be necessary and shall conform to them as part of the Contract. In the event of any doubt or question arising respecting the true meaning of the Specifications and Plans, reference shall be made to the Engineer, whose decision thereon shall be final and conclusive.

5.12.4 In the event of any discrepancy between any Plans and the figures written thereon, the figures shall be taken as correct. Detailed drawings shall prevail over general drawings.

5.12.5 Any reference made in the Specifications or on the Plans to any specification, standard, method, or publication of any scientific or technical society or other organization shall, in the absence of a specific designation to the contrary, be understood to refer to the Specification, standard, method, or publication in effect as of the date that the work is advertised for Bids.

5.13 SUBCONTRACTS

5.13.1 The attention of the Contractor is directed to California Public Contract Code section 4100, et seq., regarding subcontracting and said provisions are by this reference incorporated herein and made a part hereof.

5.13.2 Each subcontract shall contain a suitable provision for the suspension or termination thereof should the work be suspended or terminated or should the subcontractor neglect or fail to conform to every provision of the Contract Documents insofar as such provisions are relevant. No subcontractor or supplier will be recognized as such, and all persons engaged in work will be considered as employees of the Contractor, and the Contractor will be held responsible for their work, which shall be subject to the provisions of the Contract Documents. The Contractor shall be fully responsible to the District for the acts or omissions of its subcontractors and of the persons either directly or indirectly employed by them. Nothing contained in the Contract Documents shall create any contractual relationship between any subcontractor and the District. If a legal action, including arbitration and litigation, against the District is initiated by a subcontractor or supplier, the Contractor shall reimburse the District for

the amount of legal, engineering and all other expenses incurred by the District in defending itself in said action.

5.13.3 The District and the Engineer reserve the right to approve all subcontractors. Such approval shall be a consideration to the awarding of the Contract and unless notification to the contrary is given to the Contractor prior to the signing of the Contract, the list of subcontractors that is submitted with its proposal will be deemed to be acceptable.

5.14 COOPERATION OF CONTRACTORS

5.14.1 Should construction be under way by other forces or by other contractors within or adjacent to the limits of the work specified or should work of any other nature be under way by other forces within or adjacent to said limits, the Contractor shall cooperate with all such other contractors or other forces to the end that any delay or hindrance to their work will be avoided. The right is reserved by the District to perform other or additional work at or near the site (including material sources) at any time, by the use of other forces.

5.14.2 When two or more contractors are employed on related or adjacent work, each shall conduct its operation in such a manner as not to cause any unnecessary delay or hindrance to the other. Each contractor shall be responsible to the other for all damage to work, to persons or property caused to the other by its operations, and for loss caused the other due to its unnecessary delays or failure to finish the work within the time specified for completion.

5.15 SUPERINTENDENCE

5.15.1 The Contractor shall designate in writing before starting work an individual as authorized representative who shall have the authority to represent and act for the Contractor. This authorized representative shall be present at the site of the work at all times while work is actually in progress on the Contract. When work is not in progress and during periods when work is suspended, arrangements acceptable to the Engineer shall be made for any emergency work that may be required.

5.15.2 The Contractor is solely responsible, at all times, for the superintendence of the work and for its safety and progress.

5.15.3 Whenever the Contractor or its authorized representative is not present on any particular part of the work where it may be desired to give direction, orders will be given by the Engineer, which shall be received and obeyed by the superintendent or foreman who may have charge of the particular work in reference to which the orders are given.

5.15.4 Any order given by the Engineer, not otherwise required by the Contract Documents to be in writing, will on request of the Contractor, be given or confirmed by the Engineer in writing.

5.16 INSPECTION OF WORK

5.16.1 Unless otherwise provided, all equipment, materials, and work shall be subject to inspection and testing by the Engineer. The Engineer will observe the progress

and quality of the work and determine, in general, if the work is proceeding in accordance with the intent of the Contract Documents. He shall not be required to make comprehensive or continuous inspections to check the quality of the work, and he shall not be responsible for construction means, methods, techniques, sequences, or procedures, or for safety precautions and programs in connection with the work. Visits and observations made by the Engineer shall not relieve the Contractor of its obligation to conduct comprehensive inspections of the work and to furnish proper materials, labor, equipment and tools, and perform acceptable work, and to provide adequate safety precautions, in conformance with the intent of the Contract.

5.16.2 Whenever the Contractor varies the period during which work is carried on each day, it shall give due notice to the Engineer so that proper inspection may be provided. Any work done in the absence of the Engineer shall be subject to rejection. Proper facilities for safe access for inspection to all parts of the work shall at all times be maintained for the necessary use of the Engineer and other agents of the District, and agents of the Federal, State, or local governments at all reasonable hours for inspection by such agencies to ascertain compliance with laws and regulations.

5.16.3 One or more inspectors may be assigned to observe the work and to act in matters of construction under this Contract. It is understood that inspectors shall have the power to issue instructions and make decisions within the limitations of the authority of the Engineer. Such inspection shall not relieve the Contractor of its obligation to conduct comprehensive inspections of the work, to furnish proper materials, labor, equipment and tools, and perform acceptable work, and to provide adequate safety precautions in conformance with the intent of the Contract.

5.16.4 The Engineer and his representatives shall at all times have access to the work wherever it is in preparation or progress; and the Contractor shall provide safe and convenient facilities for such access and for inspection. If the Specifications, the Engineer's instructions, laws, ordinances, or any public authority require any material, equipment or work to be specifically tested or approved, the Contractor shall give the Engineer timely notice of its readiness for inspection, and if the inspection is by an authority other than the District, of the time fixed for inspection. Inspections by the Engineer will be made promptly and, where practicable, at the source of supply.

5.16.5 Work performed without inspection may be required to be removed and replaced under proper inspection and the entire cost of removal and replacing, including the cost of District-furnished materials used in the work, shall be borne by the Contractor, regardless of whether or not the work exposed is found to be defective. Examination of questioned work, other than that installed without inspection, may be ordered by the Engineer and, if so ordered, the work must be uncovered by Contractor. If such work is found to be in accordance with the Contract Documents, the District will pay the cost of reexamination and replacement. If such work is found to be not in accordance with the Contract Documents, the Contractor shall pay such cost unless it can show that the defect in the work was caused by another contractor, and in that event the District will pay such costs.

5.16.6 The inspection of the work shall not relieve the Contractor of its obligation to fulfill the Contract as herein prescribed, or in any way alter the standard of

performance provided by the Contractor; and defective work shall be made good and unusable materials may be rejected, notwithstanding that such work and materials have been previously overlooked by the Engineer and accepted or estimated for payment. If the work or any part thereof shall be found defective, Contractor shall, within ten (10) calendar days, make good such defect in a manner satisfactory to the Engineer. If the Contractor shall fail or neglect to make ordered repairs of defective work or to remove the condemned materials from the work within ten (10) calendar days after direction by the Engineer in writing, the District may make the ordered repairs, or remove the condemned materials, and deduct the cost thereof from any monies due the Contractor.

5.16.7 The Contractor shall furnish promptly without additional charge all facilities, labor and materials reasonably needed by the Engineer for performing all inspection and tests. Contractor shall be charged with any additional cost of inspection when material and workmanship are not ready at the time specified by the Contractor for its inspection.

5.16.8 Where any part of the work is being done under an encroachment permit or building permit, or is subject to Federal, State, County or City codes, laws, ordinances, rules or regulations, representatives of the government agency shall have full access to the work and shall be allowed to make any inspection or tests in accordance with such permits, codes, laws, ordinances, rules, or regulations. If advance notice of the readiness of the work for inspection by the governing agency is required, the Contractor shall furnish such notice to the appropriate agency.

5.16.9 The Engineer may inspect the production of material, or the manufacture of products at the source of supply. Plant inspection, however, will not be undertaken until the Engineer is assured of the cooperation and assistance of both the Contractor and the material producer. The Engineer or his authorized representative shall have free entry at all times to such parts of the plant as concerns the manufacture or production of the materials. Adequate facilities shall be furnished free of charge to make the necessary inspection. The District assumes no obligation to inspect materials at the source of supply.

5.17 TESTS

The Contractor shall perform at its expense all tests specified or required by the Specifications. The Engineer will perform such tests as he deems necessary to determine the quality of work or compliance with Contract Documents. The Contractor shall furnish promptly without additional charge all facilities, labor, and material reasonably required for performing safe and convenient tests as may be required by the Engineer. All tests by the Engineer will be performed in such a manner as will not unnecessarily delay the work. The Contractor shall not be required to reimburse the District for tests performed by the District or Engineer. If samples of materials are submitted which fail to pass the specified tests, the Contractor shall pay for all subsequent tests.

5.18 REMOVAL OF REJECTED/UNAUTHORIZED WORK AND MATERIALS

5.18.1 All work or materials which have been rejected shall be remedied, or removed and replaced by the Contractor in an acceptable manner and no compensation will be allowed it for such removal, replacement, or remedial work.

5.18.2 Any work done beyond the lines and grades shown on the Plans or established by the Engineer or any extra work done without written authority will be considered as unauthorized work and will not be paid for. Upon order of the Engineer, unauthorized work shall be remedied, removed, or replaced at the Contractor's expense.

5.18.3 Upon failure of the Contractor to comply with any order of the Engineer made under this section, the District may cause rejected or unauthorized work to be remedied, removed, or replaced, and may deduct the costs therefor from any monies due or to become due the Contractor.

5.19 DEDUCTIONS FOR UNCORRECTED WORK.

If the Engineer deems it inexpedient to correct work damaged or not done in accordance with the Contract Documents, an equitable deduction from the Contract price shall be made therefor; and such sum may be withheld by the District from Contractor's payment.

5.20 EQUIPMENT AND PLANTS

5.20.1 Only equipment and plants suitable to produce the quality of work and materials required will be permitted to operate on the project.

5.20.2 Plants will be designed and constructed in accordance with general practice for such equipment and shall be of sufficient capacity to ensure the production of sufficient material to carry the work to completion within the time limit.

5.20.3 The Contractor shall provide adequate and suitable equipment and plants to meet the above requirements, and when ordered by the Engineer, shall remove unsuitable equipment from the work and discontinue the operation of unsatisfactory plants.

5.20.4 The Contractor shall identify each piece of its equipment, other than hand tools, by means of an identifying number plainly stenciled or stamped on the equipment at a conspicuous location, and shall furnish to the Engineer a list giving the description of each piece of equipment and its identifying number. In addition, the make, model number and empty gross weight of each unit of compacting equipment shall be plainly stamped or stenciled in a conspicuous place on the unit. The gross weight shall be either the manufacturer's rated weight or the scale weight.

5.20.5 In the case of termination of this Contract before completion from any cause whatever, the Contractor, if notified to do so by the District, shall promptly remove any part or all of its equipment and supplies from the property of the District. If the Contractor

fails to do so, the District shall have the right to remove such equipment and supplies at the expense of the Contractor.

5.21 CHARACTER OF WORKER

If any subcontractor or person employed by the Contractor or any subcontractor is incompetent or is acting in a disorderly, unlawful, or improper manner, District shall notify the Contractor of its determination in writing. Contractor shall immediately remove the identified subcontractor or employee from the Work, and that person shall not thereafter be employed on the Work. Such removal is an absolute right of District and shall not give rise to any claim for compensation or damages against District, the Engineer or any of their officers, directors, employees or agents.

5.22 SEPARATE CONTRACTS

5.22.1 The District reserves the right to let other contracts in connection with this work. The Contractor shall afford other contractors reasonable opportunity for the introduction and storage of their materials and the execution of their work, and shall properly connect and coordinate its work with the other contractor's work.

5.22.2 If any part of the Contractor's work depends for proper execution or results upon the work of any other contractor, the Contractor shall inspect and promptly report to the Engineer any defects in such work that render it unsuitable for such proper execution and results. The Contractor's failure to inspect and report shall constitute an acceptance of the other contractor's work as fit and proper for the reception of the Contractor's work, except as to defects that may develop in the other contractor's work after the execution of its work. To ensure the proper execution of its subsequent work, the Contractor shall measure work already in place and shall at once report to the Engineer any discrepancy between the executed work and the drawings.

5.23 MATERIALS

5.23.1 Unless otherwise specifically stated in the Specifications, the Contractor shall furnish all materials necessary for the execution and completion of the work. Unless otherwise specified, all materials shall be new and shall be manufactured, handled, and installed in a workmanlike manner to insure completion of the work in accordance with the Contract Documents. The Contractor shall, upon request of the Engineer, furnish satisfactory evidence as to the kind and quality of materials.

5.23.2 Where materials are to be furnished by the District, the type, size, quantity and location at which they are available will be stated in the Contract Documents.

5.23.3 Manufacturers' and suppliers’ warranties, guarantees, operating manuals, instruction sheets and parts listed, which are furnished with certain articles or materials incorporated in the work, shall be delivered to the Engineer before final acceptance of the Contract work.

5.24 STORAGE OF MATERIALS; STORAGE AREAS

5.24.1 Articles or materials to be incorporated in the work shall be stored in such a manner as to ensure the preservation of their quality and fitness for the work, and to facilitate inspection.

5.24.2 The Contractor's work and storage areas are limited by the right-of-way lines as indicated on the Plans. The plant facilities are to be installed in property or easements owned by the District as shown on the Plans. The District shall be specifically exempted in any agreement from any liability incurred from the use of private property for construction purposes. The Contractor shall make arrangements and pay for property off-site as required for storage, offices, work assembly areas, etc. The Contractor shall take all responsibility for storage of materials. No equipment for incorporation in the project may be stored in an area subject to flooding.

5.25 TRADE NAMES AND ALTERNATIVES

For convenience in designation in the Specifications and Plans, certain articles or materials to be incorporated in the work may be designated under a trade name or the name of a manufacturer and its catalog information. The use of an alternative article or material that is of equal quality and of the required characteristics for the purpose intended will be permitted, subject to the following requirements:

5.25.1 The burden of proof as to the quality and suitability of alternatives shall be upon the Contractor and it shall furnish all information necessary as required by the Engineer. The Engineer shall be the sole judge as to the quality and suitability of alternative articles or materials and his decision shall be final.

5.25.2 Whenever the Specifications and Plans permit the substitution of a similar or equivalent material or article, no tests or action relating to the approval of such substitute material or article will be made until the request for substitution is made in writing by the Contractor accompanied by complete data as to the equality of the material or article proposed. Such request by the Contractor must be made within thirty-five (35) days after award of Contract.

5.26 CERTIFICATES OF COMPLIANCE

5.26.1 A Certificate of Compliance shall be furnished prior to the use of any materials for which the Specifications require that such a certificate be furnished. In addition, when so authorized in the Specifications, the Engineer may permit the use of certain materials or assemblies prior to sampling and testing if accompanied by a Certificate of Compliance. The Certificate shall be signed by the manufacturer of the material or the manufacturer of assembled materials and shall state that the materials involved comply in all respects with the requirements of the Contract. A Certificate of Compliance shall be furnished with each lot of material delivered to the work and the lot so certified shall be clearly identified in the Certificate.

5.26.2 All materials used on the basis of a Certificate of Compliance may be sampled and tested at any time. The fact that material is used on the basis of a Certificate

of Compliance shall not relieve the Contractor of responsibility for incorporating material in the work which conforms to the requirements of the Contract Documents and any such material not conforming to such requirements will be subject to rejection whether in place or not.

5.26.3 The District reserves the right to refuse to permit the use of material on the basis of a Certificate of Compliance.

5.26.4 The form of the Certificate of Compliance and its disposition shall be as directed by the Engineer.

5.27 CERTIFICATES OF REPORTED COMPLIANCE

5.27.1 The Contractor must comply with the California Air Resources Board Off-Road Diesel Regulation (Title 13 CCR § 2449). In order to be eligible to perform work under this Contract, Contractor must submit to the District copies of valid Certificates of Reported Compliance, as described in section 2449(n), for the fleet selected to perform work under this Contract. If applicable, subcontractors must submit copies of valid Certificates of Reported Compliance, as well. If Contractor does not provide said Certificates, Contractor may not perform work under this Contract.

5.27.2 The California Air Resources Board Off-Road Diesel Regulation applies to all self-propelled offroad diesel vehicles with 25 horsepower or greater and most two-engine vehicles (except on-road two-engine sweepers). This includes vehicles that are rented or leased (rental or leased fleets). If there are changes to such equipment during the course of the Contract, Contractor must submit new Certificates to maintain compliance with this Contract.

5.28 ASSIGNMENT

The Contractor shall not assign the Contract or sublet it as a whole or in part without the written consent of the District, nor shall the Contractor assign any monies due, or to become due to it hereafter, without the prior written consent of the District.

5.29 DISTRICT ENTRY ON WORKSITE; RIGHT TO OPERATE UNSATISFACTORY EQUIPMENT OR FACILITIES

5.29.1 The District may, at any time, and from time to time, during the performance of the work, enter the worksite for the purpose of installing any necessary work by District labor or other contracts, and for any other purpose in connection with the installation of facilities. In doing so, the District shall endeavor not to interfere with the Contractor and the Contractor shall not interfere with other work being done by or on behalf of the District.

5.29.2 The District reserves the right, prior to completion and final acceptance, to occupy, or use, any completed part or parts of the work, providing these areas have been approved for occupancy by the District. The exercise of this right shall in no way constitute an acceptance of such parts, or any part of the work, nor shall it in any way affect the dates and times when progress payments shall become due from the District to the Contractor or in any way

prejudice the District's rights in the Contract, or any bonds guaranteeing the same. The Contract shall be deemed completed only when all the work contracted has been duly and properly performed and accepted by the District.

Prior to such occupancy or use, the District and Contractor shall agree in writing regarding the responsibilities assigned to each of them for payments, security, maintenance, heat, utilities, damage to the work, insurance, the period for correction of the work, and the commencement of warranties required by the Contract Documents.

In exercising the right to occupy or use completed parts of the work prior to the completion thereof, the District shall not make any use which will materially increase the cost to the Contractor, without increasing the Contract amount, nor materially delay the completion of the Contract, without extending the time for completion.

5.29.3 If, following installation of any equipment or facilities furnished by the Contractor, defects requiring correction by the Contractor are found, the District shall have the right to operate such unsatisfactory equipment or facilities and make reasonable use thereof until the equipment or facilities can be shut down for correction of defects without injury to the District.

5.30 LANDS FOR WORK; RIGHTS OF WAY; CONSTRUCTION ROADS; TEMPORARY UTILITY SERVICES

5.30.1 The District will provide the lands, easements, rights of way, and/or encroachment permits necessary or other rights to enter and work on lands necessary for the performance of the work. Other permits and licenses are addressed by section 5.10. Should the Contractor find it advantageous to use any additional land for any purpose whatever, the Contractor shall provide for the use of such land at its expense. The Engineer shall be furnished with a copy of written agreements or otherwise be notified in writing of additional working space which is acquired. Nothing herein contained and nothing marked on the Plans shall be interpreted as giving the Contractor exclusive occupancy of the territory provided by the District. When two or more contracts are being executed at one time on the same or adjacent land in such a manner that work on one contract may interfere with that on another, the Engineer shall decide which contractor shall cease work, and which shall continue, or whether the work on both contracts shall progress at the same time and in what manner; and the decision of the Engineer shall be final and binding. When the territory of one contract is the necessary or convenient means of access for the performance of another contract, such privilege of access or any other reasonable privilege may be granted by the Engineer to the contractor so desiring, to the extent, amount, in the manner, and at the time permitted. No such decision as to the method or time of conducting the work or the use of territory shall be the basis of any claim for delay or damage.

5.30.2 Lands, easements or rights of way to be furnished by the District for construction operations will be specifically shown on the Plans.

5.30.3 The Contractor shall construct and maintain all roads necessary to reach the various parts of the work and for the transportation thereto of construction material

and personnel. The cost of constructing and maintaining such roads shall be borne by the Contractor.

5.30.4 The Contractor shall make its own arrangements for any utility services it may require during the life of this project. The Contractor shall make its own arrangements for telephone service which it will require for its field office.

5.31 PROGRESS SCHEDULE

5.31.1 The Contractor shall submit within 10 days after Date of the Contract a schedule or schedules which shall show the dates at which the Contractor will start and complete the several parts of the work. This schedule shall conform to the completion time specified in the Contract. The Contractor shall review and, if necessary, revise the progress schedule at least once per month, and in any event shall submit a current schedule to the Engineer at his request at any time during the contract period.

The Contractor's timely submittal of complete and accurate initial and updated project schedules is a material requirement of this Contract, and Contractor's failure to comply with this requirement would be a material breach of this Contract that could subject Contractor to all applicable penalties, up to and including termination.

5.31.2 The Engineer shall be advised in advance by the Contractor when any part of the work is scheduled and the days when no work will take place. If the Contractor fails to notify the Engineer in advance of the day or days when no work will be done, the Contractor will be charged the cost of inspection for that day or days and such charges may be deducted from any payment due the Contractor.

5.31.3 When, in the judgment of the Engineer, it is necessary to accelerate any part of the work ahead of schedule, the Contractor shall, when directed, concentrate its efforts on such part of the work.

5.32 COMMENCEMENT AND PROGRESS OF THE WORK AND TIME OF COMPLETION; CONSTRUCTION SEQUENCE

5.32.1 The Contractor shall commence the Work covered by this Contract within fifteen (15) days after date of issuance of Notice to Proceed from the District to proceed with the Work. Work will be considered to have commenced when the Contractor begins ordering materials and equipment or starts site work. The Contractor shall not commence Work or incur any expenses in connection therewith, before it is notified to proceed with the Work. Work on the total project shall be completed within Three hundred and thirty (330) calendar days from the date of the Notice to Proceed. The time allowed for completion includes an allowance for working time lost due to normal inclement weather. A Pre-Construction conference will be scheduled by the Engineer prior to the Contractor starting Work.

5.32.2 The Contractor shall give the Engineer written notice not less than two (2) working days in advance of the actual date on which the Work will be started. The Contractor shall be entirely responsible for any delay in the Work that may be caused by this failure

to give such notice. The Engineer shall have the right to specify the locations where the Contractor shall start and proceed with the Work.

5.32.3 The Contractor shall diligently pursue the Work and complete the Work as specified within the time limits as set forth in the Contract Documents.

5.33 DELAYS

5.33.1 When the Contractor foresees a delay in the prosecution of the Work and, in any event, no later than 24 hours after the occurrence of a delay, the Contractor shall notify the Engineer in writing of the probability of the occurrence and the estimated extent of the delay, and its cause. The Contractor shall take immediate steps to prevent, if possible, the occurrence or continuance of the delay. The Contractor agrees that no claim shall be made for delays that are not called to the attention of the Engineer at the time of their occurrence. Contractor further agrees that Contractor shall not be permitted any additional time for completion of the Work or any additional compensation as a result of delay unless Contractor notifies the Engineer of the delay within the time specified herein.

5.33.2 Non-Excusable Delays - Non-excusable delays in the prosecution of the Work shall include delays which could have been avoided by the exercise of care, prudence, foresight, and diligence on the part of the Contractor or its subcontractors, at any tier level, or suppliers.

5.33.3 Excusable Delays - Excusable delays in the prosecution or completion of the Work shall include delays which result from causes beyond the control of the Contractor and District and which could not have been avoided by the exercise of care, prudence, foresight, and diligence on the part of the Contractor or its subcontractors, at any tier level, or suppliers.

5.33.3.1 Abnormal Delays - Delays caused by a Force Majeure Event shall be considered as excusable delays insofar as they prevent the Contractor from proceeding with at least seventy-five (75) percent of the normal labor and equipment force for at least five (5) hours per day toward completion of the current critical activity item(s) on the latest favorably reviewed progress schedule. Such delays may entitle the Contractor to a no-cost adjustment in the Project schedule as its sole and exclusive remedy.

5.33.3.2 Weather Delays - Should inclement weather conditions or the conditions resulting from weather prevent the Contractor from proceeding with seventy five (75) percent of the normal labor and equipment force engaged in the current critical activity item(s) for a period of at least five (5) hours per day toward completion of such operation or operations, and the crew is dismissed as a result thereof, it shall be deemed a weather delay day.

5.33.3.3 Material Supply Shortages - Upon the submission of satisfactory proof to the Engineer by the Contractor, a Supply Shortage of material may be acceptable as grounds for granting a time extension. A time extension for shortage of material will not be considered for material ordered or delivered late or whose availability is affected by virtue of the mishandling of the procurement. The above provisions apply equally to equipment to be installed in the Work.

5.33.4 Compensable Delays - Compensable delays in the prosecution or completion of the Work shall include delays that occur through no fault of the Contractor and prevent the Contractor from proceeding with at least seventy-five (75) percent of the normal labor and equipment force for at least five (5) hours per day toward completion of the current critical activity item(s) on the latest favorably reviewed progress schedule due one or more of the following cause(s):

a. Delays due solely to the actions and/or inactions of the District.

b. Delays due to differing site conditions as addressed in sections 5.3.14 and 5.51.8.5.

c. Delays due to other Contractors employed by the District who interfere with the Contractor's prosecution of the work as defined above.

No delay shall be compensable unless the claimed event or occurrence delays completion of the Work beyond the contractual completion date or the completion date shown in the accepted initial or updated schedules, and the delay affects a critical activity while such activity is on the critical path.

5.33.5 Concurrent Delays - Concurrent delays are those delay periods when the prosecution of the Work is delayed during the same period of time due to causes from a combination of the delays defined in sections 5.33.2 (Non-Excusable Delays), 5.33.3 (Excusable Delays), or 5.33.4 (Compensable Delays). During such concurrent delay periods, time extensions will be granted in accordance with the sections below in section 5.34; however, the Contractor shall not be compensated for its delay damages as defined in section 5.35, or for any other damages, and the District shall not assess its actual costs as defined in section 5.33.5 (Non-Excusable Delay Extensions).

5.34 EXTENSIONS OF TIME

5.34.1 Non-excusable Delay Extensions - The District may in its sole discretion grant an extension of time for non-excusable delays if the District deems it is in its best interest. If the District grants an extension of time for non-excusable delays, the Contractor agrees to pay the District's actual costs, including charges for engineering, inspection and administration incurred during the extension.

5.34.2 Excusable or Compensable Delay Extensions - If the Contractor is delayed in the performance of its Work as defined in section 5.33.3 (Excusable Delays), or section 5.33.4 (Compensable Delays), then the Contract completion date may be extended by the District for such time that, in the District's and Engineer's determination, the Contractor's completion date will be delayed, provided that the Contractor strictly fulfills the following:

a. The Contractor shall provide notification, in accordance with section 5.33.1 and as otherwise provided by this Contract, and may submit in writing a request for an extension of time to the Engineer stating at a minimum the probable cause of the delay and the number of days being requested. Any Contractor time extension request shall be submitted as a change order request in accordance with the requirements of section 5.3.

b. If requested by the Engineer, the Contractor shall promptly provide sufficient information to the Engineer to assess the cause or effect of the alleged delay, or to determine if other concurrent delays affected the work.

c. Weather Delays. The Contractor will be granted a non-compensable time extension for weather caused delays, pursuant to section 5.33.3.2 (Weather Delays), over and above any allowance provided for in this Contract for weather days or weather delays.

Should the Contractor fail to fulfill any of the foregoing, which are conditions precedent to the right to receive a time extension, the Contractor waives the right to receive a time extension.

During such extension of time, neither extra compensation for engineering, inspection and administration nor damages for delay will be charged to the Contractor. It is understood and agreed by the Contractor and District that time extensions due to excusable or compensable delays will be granted only if such delays involve controlling operations which would prevent completion of the whole work within the specified Contract time.

Should the Contractor fail to complete the work within the time specified in the Contract, as extended in accordance with this clause if appropriate, the Contractor shall pay to the District liquidated damages in accordance with section 5.39.

5.35 DELAY DAMAGES

5.35.1 Indirect Overhead - The Contractor shall be reimbursed for indirect overhead expenses for periods of time when the work is delayed as defined in section 5.33.4 (Compensable Delays). However, no reimbursement for indirect overhead or any other costs or damages shall be made for compensable delays which occur during a concurrent delay as defined in section 5.33.5 (Concurrent Delays). No reimbursement for indirect overhead as covered in this section shall be made for any time extensions granted for Contract change orders as provided in section 5.5. As a condition precedent to any reimbursement, the Contractor must fulfill all conditions as provided in section 5.34.2 (Excusable or Compensable Delays). No additional markup for overhead or profit shall be provided for such indirect overhead expenses.

Payment to the Contractor for indirect overhead expenses will be made only if the extended Contract period granted for the compensable delay(s) is required to complete the Work following the depletion of the original contract period and any time extensions granted other than compensable time extensions. Except as provided herein, the Contractor shall have no claim for damage or compensation for any delay including not limited to extended field costs, extended home office overhead costs, impact, inefficiency, unabsorbed home office overhead, under-absorbed home office overhead, hindrance, disruption, or any other damage arising from delay, no matter how characterized, including delay claims of its subcontractors/suppliers of every tier.

5.35.1.1 Indirect Field Overhead - For those allowable delay periods as defined in section 5.35.1 (Indirect Overhead), the Contractor shall be reimbursed for its indirect field overhead based on:

a. Invoices for all field office equipment.

b. Actual salary for field office staff.

c. Fair rental values acceptable to the Engineer for construction equipment idled due to the delay.

5.35.1.2 Indirect Home Office Overhead - For those allowable delay periods as defined in section 5.35.1 (Indirect Overhead), the Contractor shall be reimbursed for its daily home office overhead based on the following formula:

Contract Bid Price ($) ÷ Contract Period (Days) x (0.04) = Daily Home Office Overhead ($/Day).

As it is impractical to determine the actual home office overhead, such reimbursement shall be mutually agreed between the District and Contractor to encompass full payment for any home office overhead expenses for such periods of time for the Contractor and all subcontractors. The Contractor agrees to indemnify, defend and hold the District harmless for any indirect overhead claims from its subcontractors.

5.36 SUSPENSION OF WORK

5.36.1 The Engineer may at any time, by notice in writing to the Contractor, suspend any part of the work for such period of time with or without cause, and the Contractor shall have no claim for damages or additional compensation on account of any such suspension.

5.36.2 Upon receipt of a written notice to suspend any portion of the work issued by the Engineer, the Contractor shall thereupon discontinue all work suspended except for all operations necessary to prevent loss or damage to work already executed as may be directed by the Engineer. In the event a part of the work is suspended, the Contractor, if the suspension is not through its fault or the fault of its subcontractors or agents, shall be paid in accordance with section 5.3.9 for costs of work performed in accordance with such orders of the Engineer during such suspension, provided that this shall not include any cost pertaining to work not suspended by the notice to suspend work. Work shall be resumed by the Contractor after such suspension on subsequent written notice to resume work from the District. In the event of suspension of the entire work by the District, the Contractor, if the suspension is not through the fault of the Contractor or the fault of its subcontractors or agents, shall be paid the sum of $50 for each calendar day during which the entire work shall have been suspended. Said sum is hereby mutually agreed upon as fixed and liquidated damages in full settlement of all costs and expenses, losses and damages resulting to the Contractor from such suspension.

5.36.3 In the event of any suspension of the work in whole or in part under subsection 5.36.2, if the suspension is not through the fault of the Contractor or the fault of

its subcontractors or agents, the Contractor shall be entitled to an extension of time wherein to complete the work to the extent of the delay caused the Contractor thereby. If no agreement can be reached as to the time for extension, the Contractor shall submit a claim to the District within fifteen (15) days of a notice from the District that no agreement can be reached. The claim shall be processed in accordance with section 5.5.

5.36.4 In the event the entire work shall be suspended by order of the District, and shall remain so suspended for a period of ninety (90) consecutive days, through no fault of the Contractor or its subcontractors or agents, and notice to resume the work shall not have been served on the Contractor, Contractor may, at its option, by written notice to the District, terminate the Contract in the same manner and on the same terms as if the termination had been initiated by the District pursuant to section 5.37, and the District shall have no claim for damages because of such termination of the Contract.

5.37 TERMINATION FOR DEFAULT; DAMAGES FOR DELAY; TIMELY EXTENSION

5.37.1 Subject to prior notice from the District and the Contractor's cure rights set forth in this section, the District will have the right to terminate the Contract for cause and/or the Contractor's right to proceed with the work upon the occurrence of any of the following:

a. Contractor becomes insolvent or files for relief under the bankruptcy laws of the United States.

b. Contractor makes a general assignment for the benefit of its creditors or fails to pay its debts as the same become due.

c. A receiver is appointed to take charge of Contractor's property.

d. The work is not completed within the applicable Contract time, as such Contract time may be adjusted in accordance with this Contract, and Contractor is not diligently prosecuting the completion or correction of the work.

e. Contractor persistently or repeatedly refuses or fails to supply skilled supervisory personnel, an adequate number of properly skilled workers, proper materials, or necessary equipment to prosecute the work in accordance with the Contract Documents.

f. Contractor fails to make prompt payment of amounts properly due subcontractors after receiving payment from District.

g. Contractor disregards applicable laws, regulations or other governmental requirements.

h. Contractor persistently or materially fails to execute the work in accordance with the Contract Documents.

i. Contractor persistently or materially fails to comply with applicable safety requirements.

j. Contractor abandons the work.

k. Contractor is in default of any other material obligation under the Contract Documents.

5.37.2 Upon the occurrence of any of the preceding events, District will have the right to terminate the Contract for cause and/or the Contractor's right to proceed with the work if Contractor fails to promptly commence to cure such default and diligently prosecutes such cure within 5 days after notice from District, or within such longer period of time as is reasonably necessary to complete such cure.

5.37.3 The rights and remedies of the District provided in this section are in addition to any of the rights and remedies provided by law or under this Contract.

5.37.4 In addition to the District's rights under this section, if at any time before completion of the work under the Contract, it shall be determined by the District that it is advisable for it, for whatever reason, to terminate the work, it may do so upon ten (10) days written notice to the Contractor. Upon service of such notice of termination, the Contractor shall discontinue the work in such manner, sequence, and at such times as the Engineer may direct. The Contractor shall have no claim for damages for such discontinuance or termination, nor any claim for anticipated profits on the work thus dispensed with or uncompleted, nor any other claim except for the work actually performed up to the time of termination, including any extra work ordered by the Engineer to be done, nor for any claim for liquidated damages in accordance with the provisions of section 5.36.

5.37.5 Upon receipt of notice of termination of the Contract and/or the Contractor's right to proceed with the work under this section 5.37, the Contractor shall, unless the notice directs otherwise, do the following:

a. Immediately discontinue the work to the extent specified in the notice.

b. Place no further orders or subcontracts for materials, equipment, services, or facilities, except as may be necessary for completion of such portion of the work as is not discontinued.

c. Promptly cancel, on the most favorable terms reasonably possible, all orders and subcontracts to the extent they relate to the performance of the discontinued portion of the work.

d. Thereafter do only such work as may be necessary to preserve and protect work already in progress and to protect materials, plants, and equipment on the project site or in transit thereto.

Upon termination of the Contract, the obligations of the Contract shall continue as to portions of the work already performed and, subject to the Contractor's obligations under this section 5.37, as to bona fide obligations assumed by the Contractor prior to the date of termination.

Upon termination of the Contract or the Contractor's right to proceed with the work, the District shall pay to the Contractor the sum of the following:

a. The amount of the Contract price allocable to the portion of the work properly performed by the Contractor as of the date of termination, less sums previously paid to the Contractor.

b. Plus previously unpaid costs of any items delivered to the project site that were fabricated for subsequent incorporation into the work.

c. Plus any proven losses with respect to materials and equipment directly resulting from such termination.

d. Plus reasonable demobilization costs.

e. Plus reasonable costs of preparing a statement of the aforesaid costs, expenses, and losses in connection with such termination.

The above payment shall be the sole and exclusive remedy to which the Contractor is entitled in the event of termination of the Contract by the District and/or the Contractor's right to proceed with the work pursuant to this section 5.37; and the Contractor will be entitled to no other compensation or damages and expressly waives same. The District shall have the right to subtract from the above payment such sums as may be deducted consistent with the terms of the Contract Documents.

5.38 RIGHTS OF DISTRICT UPON TERMINATION

5.38.1 In the event the right of the Contractor to proceed with the work, or any portion thereof, has been terminated because of the fault of the Contractor and the Contractor has been given five (5) days' notice to cure such fault and has not done so, the District may take over the work and prosecute the same to completion by contract or any other method the District deems expedient, and may take possession of and utilize in completing the work such materials, appliances, equipment and plant as may be on the site of the work and necessary therefor. Whether or not the Contractor's right to proceed with the work is terminated, it and its sureties shall be liable for all damages, including but not limited to, costs of managerial and administrative services, engineering, legal and other consultant fees, sustained or incurred by the District in enforcing the provisions of section 5.37 and in completing or causing to complete the Contract work.

5.38.2 Upon termination, the Contractor shall not be entitled to receive any further payment until the work is finished. If upon completion of the work the total cost to the District, including, but not limited to, engineering, legal and other consultant fees, costs of managerial and administrative services, construction costs and liquidated damages, shall be less than the amount which would have been paid if the work had been completed by the Contractor in

accordance with the terms of the Contract, then the difference shall be paid to the Contractor in the same manner as the final payment under the Contract. If the total cost incurred by the District on account of termination of the Contractor and subsequent completion of the work by the District by whatever method the District may deem expedient shall exceed said amount which the Contractor would otherwise have been paid, the Contractor and its sureties shall be liable to the District for the full amount of such excess expense.

5.38.3 The rights and remedies of the District provided in this section are in addition to any of the rights and remedies provided by law or under this Contract.

5.39 FAILURE TO COMPLETE THE WORK IN THE TIME AGREED UPON; LIQUIDATED DAMAGES

5.39.1 It is agreed by the parties to the Contract that time is of the essence; and that in case all the work is not completed before or upon the expiration of the time limit as set in the Bid, Contract and/or Progress Schedule as designated by the District (Generally the date of final completion), or as revised by any time extensions that may have been granted, damage will be sustained by the District; and that it may be impracticable to determine the actual amount of damage by reason of such delay; and it is, therefore, agreed that the Contractor shall pay to the District as damages the amount of $_____500.00_ liquidated damages amount] per day for each and every day's delay in finishing the work in excess of the number of days specified. The parties expressly agree that this liquidated damage clause is reasonable under the circumstances existing at the time the Contract was made. The District shall have the right to deduct the amount of liquidated damages from any money due or to become due the Contractor.

5.39.2 Notwithstanding the above, the parties expressly agree that the liquidated damages specified above do not include the District's legal, engineering, inspection, superintendence and other similar expenses. Accordingly, the District shall have the right to charge to the Contractor and to deduct from the final or progress payments for the work the actual cost to the District of legal, engineering, inspection, superintendence, loss of revenue due to water delivery interruptions, and other expenses, which are directly chargeable to the Contract and which accrue during the period of such delay, except that the cost of final inspection and preparation of the final estimate shall not be included in the charges.

5.39.3 Notwithstanding the provisions of section 5.39.1, the Contractor shall not be liable for liquidated damages or delays caused by the removal or relocation of utilities when such removal or relocation is the responsibility of the District or the owner of the utility under California Government Code section 4215.

5.40 CLEAN UP

5.40.1 During the progress of the work, the Contractor shall maintain the site and related structures and equipment in a clean, orderly condition and free from unsightly accumulation of rubbish. Upon completion of work and before the final estimate is submitted, the Contractor shall at its own cost and expense remove from the vicinity of the work all plants, buildings, rubbish, unused work materials, concrete forms, and temporary bridging and other like materials, belonging to it or used under its direction during the construction; and in the event of its

failure to do so, the same may be removed by the District after ten (10) calendar days' notice to the Contractor, such removal to be at the expense of the Contractor. Where the construction has crossed yards or driveways, they shall be restored by the Contractor to the complete satisfaction of the Engineer, at the Contractor's expense.

5.40.2 The Contractor shall dispose of all testing or disinfection water without damage to property, and all in accordance with applicable regulations. All chlorinated water shall be dechlorinated prior to discharge.

5.41 COMPLIANCE WITH LAWS; PERMITS; TAXES

Contractor is an independent contractor and shall at its sole cost and expense do the following: comply with all laws, rules, ordinances and regulations of all federal, state and local agencies having jurisdiction over the work; procure all permits and licenses, pay all charges and fees, and give all notices necessary and incident to the lawful prosecution of the work; pay all federal, state and local taxes, including manufacturers' taxes, sales taxes, use taxes, processing taxes, and payroll, wage, insurance, social security, and unemployment taxes on wages, salaries or any remuneration paid to Contractor's employees, whether levied under existing or subsequently enacted laws, rules or regulations; and pay all property tax assessments on materials or equipment used until acceptance by the District. If any discrepancy or inconsistency is discovered in the Plans or Specifications, or in this Contract in relation to any such law, rule, ordinance, regulation, order or decree, the Contractor shall forthwith report the same to the Engineer in writing. The Contractor shall also protect, defend, hold harmless and indemnify the District, the Engineer, and all of the District's officers, directors, agents, and employees against any claim or liability arising from or based upon the violation of any such law, rule, ordinance, regulation, order or decree, whether by the Contractor itself or by its employees. Particular attention is called to the following:

5.41.1 Contractor is responsible for the safety of its workers and Contractor shall comply with, and require its workers to comply with, all applicable federal and state worker and job site safety-related laws and regulations, including, but not limited to, applicable federal Department of Labor, Occupational Safety and Health Administration ("OSHA") regulations and California Department of Industrial Relations (including the Division of Occupational Safety and Health and Occupational Safety and Health Standards Board ("Cal/OSHA")) regulations and safety orders.

5.41.2 The Contractor, upon request, shall furnish evidence satisfactory to the District and Engineer that any or all of the foregoing obligations have been or are being fulfilled. The Contractor warrants to the District that it is licensed by all applicable federal, state and local governmental bodies to perform this Contract and will remain so licensed throughout the progress of the work, and that it has, and will have, throughout the progress of the work, the necessary experience, skill and financial resources to enable it to perform this Contract.

5.41.3 The Contractor shall comply in all respects with the requirements of AB 5 (Labor Code section 3351 and Unemployment Insurance Code sections 606.5 and 621), and is solely responsible for such compliance and the costs thereof. The Contractor shall indemnify, hold harmless and defend the Agency against any claims, demands or

damages of any workers or entity arising out of Contractor's failure to comply in all respects with the requirements of AB 5.

5.42 PREVAILING WAGE PENALTIES; WAGE CLAIMS PROHIBITED

5.42.1 The Contractor shall forfeit as penalty to the District not more than the sum of two hundred dollars ($200) and not less than forty dollars ($40) for each calendar day or portion thereof for each worker (whether employed by the Contractor or subcontractor) paid less than the stipulated prevailing rates for any work done under the Contract in violation of the provisions of the California Labor Code and in particular, sections 1772 to 1780. The amount of this penalty shall be determined by the Labor Commissioner and shall be based on consideration of the contractor's mistake, inadvertence, or neglect in failing to pay the correct rate of prevailing wages, the previous record of the contractor in meeting its prevailing wage obligations, and a contractor's willful failure to pay the correct rates of prevailing wages. A mistake, inadvertence, or neglect in failing to pay the correct rate of prevailing wages is not excusable if the contractor had knowledge of its obligations under Labor Code sections 1720, et seq. In addition to the aforementioned penalty, each worker shall be paid the difference between the prevailing wage rate and the amount paid to each worker for each calendar day or portion thereof for which said worker was paid less than the prevailing wage.

5.42.2 The District will not recognize any claims for additional compensation because of the payment of the wages set forth in the Contract Documents. The possibility of wage increases is one of the elements to be considered by the Contractor in determining its Bid, and will not under any circumstances be considered as the basis of a claim against the District or the Engineer.

5.43 LABOR DISCRIMINATION

Attention is directed to California Labor Code section 1735 which is applicable to the work under this Contract and which reads as follows: "A contractor shall not discriminate in the employment of persons upon public works on any basis listed in subdivision (a) of section 12940 of the Government Code, as those bases are defined in sections 12926 and 12926.1 of the Government Code, except as otherwise provided in section 12940 of the Government Code. Every contractor for public works who violates this section is subject to all the penalties imposed for a violation of this chapter."

5.44 EIGHT HOUR DAY LIMITATION; CERTIFIED PAYROLL REPORTS

5.44.1 In accordance with the provisions of the California Labor Code, and in particular, sections 1810 to 1815, eight hours labor shall constitute a day's work, and no worker, in the employ of the Contractor, or any subcontractor, doing or contracting to do any part of the work contemplated by this Contract, shall be required or permitted to work more than eight (8) hours in any one calendar day and forty (40) hours in any one calendar week in violation of those provisions; provided that subject to Labor Code section 1815, a worker may perform work

in excess of either eight (8) hours per day or forty (40) hours during any one week upon compensation for all hours worked in excess of eight (8) hours per day or forty (40) hours during any one week at not less than one and one half times the basic rate of pay. Except as just provided, the Contractor shall forfeit as a penalty to the District the sum of twenty-five dollars ($25) for each worker employed in the performance of this Contract by it or by any subcontractor under it for each calendar day during which such worker is required or permitted to labor more than eight (8) hours in any one calendar day and forty (40) hours in any one calendar week in violation of sections 1810 through 1815.

5.44.2 The Contractor shall comply in all respects with the provisions of Labor Code section 1776, whose provisions are incorporated herein by this reference. In accordance with section 1776, the Contractor and each subcontractor shall keep an accurate record showing the names, addresses, social security numbers, work classifications, and straight time and overtime hours worked each day and week, and the actual per diem wages paid to each journeyman, apprentice, worker, or other employee employed by it in connection with the work specified therein, which record shall be open at all reasonable hours at the principal office of the Contractor to the inspection of the District, State and Federal officers and agents. Certified copies of the payroll records shall be furnished or made available for inspection to others as provided in section 1776. These payroll records shall be certified and shall be on forms provided by the State Division of Labor Standards Enforcement, or shall contain the same information as the forms provided by the Division. The Contractor shall file a certified copy of the payroll records with the entity that requested the records within 10 days after receipt of a written request. Any copy of records made available for inspection as copies and furnished upon request to the public or any public agency by the District, the Division of Apprenticeship Standards, or the Division of Labor Standards Enforcement shall be marked or obliterated in a manner so as to prevent disclosure of an individual's name, address, and social security number. The name and address of the Contractor shall not be marked or obliterated. The Contractor shall inform the District of the location of the payroll records, including the street address, city and county, and shall, within five working days, provide a notice of a change of location and address. The Contractor shall have 10 days in which to comply subsequent to receipt of written notice specifying in what respects the Contractor must comply with this section. In the event that the Contractor fails to comply with the 10-day period, he or she shall, as a penalty to the District, forfeit one hundred dollars ($100) for each calendar day, or portion thereof, for each worker, until strict compliance is effectuated. Upon the request of the Division of Apprenticeship Standards or the Division of Labor Standards Enforcement, these penalties shall be withheld from progress payments then due.

5.45 EMPLOYMENT OF APPRENTICES

The Contractor's attention is directed to California Labor Code sections 1777.5, 1777.6 and 1777.7 pertaining to employment of indentured apprentices, which are hereby incorporated by reference into this Contract. As applicable, the Contractor or any subcontractor employed by it in the performance of the Contract work shall take such actions as necessary to comply with the provisions of sections 1777.5, 1777.6 and 1777.7.

5.46 WATER POLLUTION

5.46.1 The Contractor shall exercise every reasonable precaution to protect streams, lakes, reservoirs, and canals from pollution with fuels, oils, bitumens, calcium chloride, and other harmful materials and shall conduct and schedule its operations so as to avoid or minimize muddying and silting of said streams, lakes, reservoirs, and canals. Care shall be exercised to preserve vegetation beyond the limits of construction. The Contractor shall comply with California Fish and Game Code section 5650 and all other applicable statutes and regulations relating to the prevention and abatement of water pollution.

5.46.2 For projects that are subject to the NPDES general permit for stormwater discharges from construction activities, including the following provisions: State Water Resources Control Board ("SWRCB") Order No. 2009-0009-DWQ (NPDES No. CAS000002), National Pollutant Discharge Elimination System (NPDES) General Permit for Storm Water Discharges Associated with Construction and Land Disturbance Activities (the "NPDES Permit") requires the District to implement a the Storm Water Pollution Prevention Plan for the Project ("SWPPP"). The Contractor will have day-to-day responsibility for implementing the SWPPP and for ensuring compliance with all of its requirements. This section and its subdivisions outline the responsibilities of the District and the Contractor to comply with the NPDES Permit and to implement the SWPPP, and allocate liability for violations of the permit and the SWPPP. The Contractor also is referred to the Specifications for a copy of the SWPPP for the work and any more specific requirements concerning its implementation.

5.46.2.1 The District will designate a Legally Responsible Person ("LRP"), who shall prepare and file all required documents with the SWRCB and the applicable regional water quality control board regarding the NPDES Permit and SWPPP, including the permit registration documents and any required annual or other reports. The Contractor and its subcontractors, suppliers, agents and affiliates will cooperate with and respond immediately to any inquiry or request for information from the District's LRP, timely turn in all reports required by the SWPPP, and cooperate with the LRP in the preparation and filing of all relevant documents and reports related to NPDES Permit and SWPPP compliance.

5.46.2.2 The District will designate a Qualified SWPPP Developer ("QSD"), who will be employed by the District or the Engineer to develop a SWPPP for the work that complies with the requirements of the NPDES Permit. The District will provide the SWPPP to the Contractor by no later than the date the notice to proceed is issued. The Contractor shall review the SWPPP and certify that it has reviewed and will implement and comply with it while performing the work. Such certification will be completed and signed as part of the package the Contractor executes and returns to the District accepting the award of the Contract.

5.46.2.3 The District or the Engineer has a Qualified SWPPP Practitioner ("QSP") on staff that is authorized to act on behalf of the District. At all times during the Contract period, the Contractor also will have at least one person assigned to the work who is a certified QSP who is familiar with the SWPPP for the work and the general requirements of the NPDES Permit. The District's QSP will oversee the implementation of the SWPPP and be available to consult with the Contractor's QSP on any issues that arise in regard to SWPPP implementation and compliance. The Contractor's designated QSP will have day-to-day

responsibility the Contractor's implementation of the SWPPP and for ensuring compliance with all of its requirements by Contractor's personnel, subcontractors, suppliers, agents and affiliates.

5.46.2.4 In performing the work, it shall be the Contractor's responsibility to timely and completely implement and comply with all requirements of the SWPPP, including without limitation, control of all pollutants and their sources, implementation of all site and stabilization BMPs, and preparation of all information and documentation required by the District and the NPDES Permit to fully comply with all obligations under the SWPPP. To the extent necessary, the Contractor shall ensure that all subcontractors, suppliers, agents and affiliates involved in any portion of the work affected by the SWPPP also comply with its provisions and requirements.

5.46.2.5 The Contractor will keep at least one copy of the SWPPP on the worksite at all times and shall make it readily available for review and use by Contractor's personnel, subcontractors, suppliers, agents and affiliates. The Contractor also will make the worksite copy of the SWPPP immediately available for inspection by the District, the Engineer and any state or local inspector that has jurisdiction over the work and/or the SWPPP.

5.46.2.6 To the extent permitted by law, the Contractor shall indemnify, defend (with counsel approved by District) and hold harmless the District, and its directors, officers, employees, volunteers, and agents from and against any and all actions, judgments, legal or administrative proceedings, arbitrations, claims, damages, liabilities, attorney's fees, fines, penalties, losses, costs and expenses regardless of nature or type, arising out of, pertaining to or in any way connected with the negligence, recklessness or willful misconduct of Contractor or its employees, agents, or subcontractors, suppliers or affiliates, or the agent, employee or subcontractor of any one of them, in the implementation of and compliance with the SWPPP, except where caused by the sole negligence or willful misconduct of the District or as otherwise limited by law. The provisions of this indemnification provision, including Contractor's liability for any civil or criminal fines and penalties that may be assessed after the completion of the work by a regional water quality control board or other regulatory body, shall survive the completion of the services under, or the termination of, this Agreement.

5.46.2.7 The Contractor's failure to implement the SWPPP, to comply with its requirements or to provide any form of information or assistance to the District as outlined in this section shall be deemed a material breach of the Contract Documents and may grounds for termination of the Contract for cause in accordance with section 5.37 of these General Conditions.

5.47 PATENTS

The Contractor shall assume all costs arising from the use of patented materials, equipment, devices, or processes used on or incorporated into the work, and agrees to indemnify, defend, protect and save harmless the District, the Engineer, and all of their officers, directors, employees, and other representatives, from all suits at law, or actions of every nature for, or on account of, the use of any patented materials, equipment, devices, or processes.

5.48 USE OF ARTIFICIAL INTELLIGENCE

5.48.1 Pursuant to the terms, conditions, and limitations set forth in this section, Contractor may use artificial intelligence systems or tools, including machine learning algorithms, natural language processing, and other artificial intelligence technologies (collectively "AI"), to complete the Work and all related obligations under this Contract. The Contractor shall ensure all uses of AI performed within this Contract shall be to the benefit of the District and will not be used in any way that could harm the District. Contractor shall be fully responsible for the performance of its obligations under this Contract, and the use of any AI systems shall not in any manner relieve Contractor of such responsibility.

5.48.2 Prior to using any AI in its performance of the Work and all related obligations under this Contract, Contractor shall advise District in writing of its intent to use AI and shall keep District informed of such usage throughout the term of the Contract. During the term of this Contract, District may request, and Contractor shall provide, District with all information regarding its use of AI in its performance of this Contract. Contractor shall keep and maintain all such records that pertain to its use of AI in its performance of this Contract in compliance with section 5.74.

5.48.3 Contractor shall review any AI-generated data, information, or AI-informed decisions relating in any manner to the performance of the Work and all related obligations under this Contract to ensure that such work product is to the standard promised to District in this Contract. This quality-assurance review of AI-generated work and materials shall be conducted by a qualified Contractor employee or subcontractor. Contractor shall conduct ongoing testing and review of all AI systems used in the performance of this Contract to ensure they function as intended and do not negatively impact the quality and accuracy of the Work or divulge any proprietary or confidential information of District or its officer, employees, or agents. Contractor shall ensure that its officers, employees, and agents are properly trained to both use AI and to assess and mitigate any potential negative consequences from its use.

5.48.4 Contractor shall indemnify, defend, protect, and hold harmless District and its Indemnitees from and against any claims that arise out of, pertain to, or relate to the Contractor's use of AI. Contractor's obligations shall survive the termination of, or completion of Work under, this Contract.

5.49 PUBLIC CONVENIENCE

5.49.1 This section defines the Contractor's responsibility with regard to convenience of the public and public traffic in connection with its operations.

5.49.2 The Contractor shall conduct its operations as to offer the least possible obstruction and inconvenience to the public; and it shall have under construction no greater length or amount of work than it can prosecute properly with due regard to the rights of the public.

5.49.3 Unless otherwise provided in the Contract Documents, all public traffic shall be permitted to pass through the work with as little inconvenience and delay as possible.

5.49.4 Spillage resulting from hauling operations along or across any publicly traveled way shall be removed immediately by the Contractor at its expense.

5.49.5 Construction operations shall be conducted in such a manner as to cause as little inconvenience as possible to abutting property owners.

5.49.6 Convenient access to driveways, houses and buildings along the line of the work shall be maintained and temporary approaches to crossings or intersecting highways shall be provided and kept in good condition. When the abutting property owner's access across the right of way line is to be eliminated, or to be replaced under the Contract by other access facilities, the existing access shall not be closed until the replacement access facilities are usable.

5.49.7 Water shall be supplied at Contractor's expense if ordered by the Engineer for the alleviation or prevention of dust nuisance as provided in the Contract Documents.

5.49.8 In order to expedite the passage of public traffic through or around the work, the Contractor shall install signs, lights, flares, barricades, and other facilities for the sole convenience and direction of public traffic. Also, the Contractor shall provide and station competent flag persons whose sole duties shall consist of directing the movement of public traffic through or around the work. The cost of furnishing and installing such signs, lights, flares, barricades, and other facilities, and the cost of providing and stationing such flag persons, all for the convenience and direction of public traffic, will be considered as included in the Contract price and no additional compensation will be allowed.

5.49.9 Flagpersons and guards, while assigned to traffic control, shall perform their duties and shall be provided with the necessary equipment in accordance with the current "Instructions to Flagmen" of the California Department of Transportation. The equipment shall be furnished and kept clean and in good repair by the Contractor at its expense.

5.50 UNDERGROUND UTILITIES

Prior to conducting any excavation, the Contractor shall contact the appropriate regional notification center as required by and shall otherwise comply with California Government Code section 4216, et seq. In accordance with Government Code section 4215, the Contractor shall be compensated for the costs of locating, repairing damage not due to the failure of the Contractor to exercise reasonable care, and removing or relocating existing main or trunkline utility facilities not indicated in the Contract Plans and Specifications with reasonable accuracy, and for the equipment on the project necessarily idled during such work; provided that the Contractor shall first notify the Engineer before commencing work on locating, repairing damage to, removing or relocating such utilities.

5.51 SAFETY AND TRENCHING

5.51.1 The Contractor shall be solely and completely responsible for the conditions of the job site, including safety of all persons and property during performance of the work. This requirement shall apply continuously and not be limited to normal working hours. Safety procedures and practices shall conform to all applicable Federal, State, and local laws, ordinances, and codes, and to the rules and regulations established by OSHA and Cal/OSHA, and

to other rules of law applicable to the work. Any District obligations relating to safety of the work are separate from and do not alter the Contractor's primary responsibility for safety as provided in this Contract.

5.51.2 The Contractor shall have an Injury/Illness Prevention Program ("IIPP") in place to protect the safety of its employees and ensure that its subcontractors also have an IIPP or comply with Contractor's program. The Contractor's IIPP shall comply with and be at least as effective as the requirements of section 3203 of Title 8 of the California Code of Regulations. The Contractor and subcontractors must implement all requirements of the IIPP regulation, unless they can demonstrate that they are exempt from certain specific provisions in the regulation. The Contractor shall submit a copy of its IIPP to the District prior to any work being performed on District property.

5.51.3 The services of the Engineer in conducting construction review of the Contractor's performance is not intended to include review of the adequacy of the Contractor's work methods, equipment, bracing or scaffolding or safety measures, in, on, or near the construction site, and shall not be construed as supervision of the actual construction nor make the Engineer responsible for providing a safe place for the performance of work by the Contractor, subcontractors, or suppliers; or for access, visits, use work, travel or occupancy by any person. Contractor is responsible for ensuring that safety of their equipment, means and methods are within safe practices as required by regulatory agencies. Employers who directly employ workers exposed to a hazard; employers who create a hazard; employers who are responsible for controlling worksite safety and health conditions, and who have the authority to ensure that a hazard is corrected; and employers who have the responsibility to correct a hazard are responsible for ensuring the health and safety of employees, including other employers' employees, as per Title 8, CCR, Section 336.10.

5.51.4 If Contractor is to complete work in a confined space, as defined in section 5158 of Title 8 of the California Code of Regulations, Contractor must have a Confined Space Entry Program that complies with the requirements of Sections 5156-5158 of Title 8 of the California Code of Regulations.

5.51.5 All work and materials shall be in strict accordance with all applicable State, Federal and local laws, rules, regulations, and codes. The Contractor shall carefully instruct all personnel working in potentially hazardous work areas as to potential dangers and shall provide such necessary safety equipment and instruction as is necessary to prevent injury to personnel and damage to property. Special care shall be exercised relative to electrical work, work involving excavation and in pump sump work.

5.51.6 Nothing in this Contract is to be construed to permit work not conforming to governing law. When Contract Documents differ from governing law, the Contractor shall furnish and install the higher standards called for without extra charge. All equipment furnished shall be grounded and provided with guards and protection as required by applicable federal and state safety regulations and orders.

5.51.7 Shoring and Trench Safety Plan Attention is directed to California Civil Code section 832 relating to lateral and subjacent support, and the Contractor shall comply with this law.

5.51.8 In accordance with California Labor Code section 6705, if the total amount of the contract is in excess of $25,000 and if the work involves the excavation of any trench or trenches five feet or more in depth, the Contractor shall submit to the District for acceptance, in advance of excavation, a detailed plan showing the design of shoring, bracing, sloping, or other provisions to be made for worker protection from the hazard of caving ground during the excavation of any such trench or trenches.

5.51.8.1 In accordance with California Labor Code section 6705, if the total amount of the contract is in excess of $25,000 and if the work involves then excavation of any trench or trenches five feet or more in depth, the Contractor shall submit to the District for acceptance, in advance of excavation, a detailed plan showing the design of shoring, bracing, sloping, or other provisions to be made for worker protection from the hazard of caving ground during the excavation of any such trench or trenches.

5.51.8.2 The District or the Engineer or their consultants may have made investigations of subsurface conditions in areas where the work is to be performed. If so, these investigations are identified in the Contract Documents and the records of such investigations are available for inspection at the office of the Engineer. The detailed plan showing the design of shoring, etc., which the Contractor is required to submit to the District for acceptance of excavation will be not accepted by the District if the plan is based on subsurface conditions which are more favorable than those revealed by the investigations made by the District or the Engineer or their consultants; nor will the plan be accepted if it is based on soils-related criteria which is less restrictive than the criteria set forth in the report on the aforesaid investigations of subsurface conditions.

5.51.8.3 The detailed plan showing the design of shoring, etc., shall include surcharge loads for nearby embankments and structures, for spoil banks, and for construction equipment and other construction loadings. The plan shall indicate for all trench conditions the minimum horizontal distances from the side of the trench at its top to the near side of the surcharge loads.

5.51.8.4 Nothing contained in this section shall be construed as relieving the Contractor of the full responsibility for providing shoring, bracing, sloping, or other provisions which are adequate for worker protection. Review of the plan by the District and/or Engineer is only for general conformance to OSHA and Cal/OSHA requirements. Their failure to note exception(s) to the submittal does not relieve Contractor of any responsibility or liability for the plan. Contractor remains solely and completely responsible for all trench safety and for the means, methods, procedures, and materials therefor.

5.51.8.5 In accordance with California Public Contract Code section 7104, in the event that the work involves digging trenches or other excavations that extend deeper than four (4) feet below the surface, the Contractor shall promptly, and before the following conditions are disturbed, notify the District in writing, of any:

a. Material that the Contractor believes may be material that is hazardous waste, as defined in section 25117 of the Health and Safety Code, that is required to be removed to a Class I, Class II, or Class III disposal site in accordance with provisions of existing law;

b. Subsurface or latent physical conditions at the site differing from those indicated by information about the site made available to bidders prior to the deadline for submitting bids; or,

c. Unknown physical conditions at the site of any unusual nature, different materially from those ordinarily encountered and generally recognized as inherent in work of the character provided for in the Contract.

The District shall promptly investigate the conditions reported by the Contractor, and if it finds that the conditions do materially so differ, or do involve hazardous waste, and cause a decrease or increase in the Contractor's cost of, or the time required for, performance of any part of the work shall issue a change order under the procedures described in the Contract. In the event that a dispute arises between the District and the Contractor about whether the conditions materially differ, or involve hazardous waste, or cause a decrease or increase in the Contractor's cost of, or time required for, performance of any part of the work, the Contractor shall not be excused from any scheduled completion date provided for by the Contract, but shall proceed with all work to be performed under the Contract. The Contractor shall retain any and all rights provided either by Contract or by law which pertain to the resolution of disputes and protests between the contracting parties.

5.52 PROTECTION OF PERSON AND PROPERTY

5.52.1 The Contractor shall take whatever precautions are necessary to prevent damage to all existing improvements, including above ground and underground utilities, trees, shrubbery that is not specifically shown to be removed, fences, signs, mailboxes, survey markers and monuments, buildings, structures, the District's property, adjacent property, and any other improvements or facilities within or adjacent to the work. If such improvements or property are injured or damaged by reason of the Contractor's operations, they shall be replaced or restored, at the Contractor's expense, to a condition at least as good as the condition they were in prior to the start of the Contractor's operations.

5.52.2 The Contractor shall adopt all practical means to minimize interference to traffic and public inconvenience, discomfort or damage. The Contractor shall protect against injury to any pipes, conduits or other structures crossing the trenching or encountered in the work and shall be responsible for any injury done to such pipes or structures, or damage to property resulting therefrom. The Contractor shall support or replace any such structures without delay and without any additional compensation to the entire satisfaction of the Engineer. All obstructions to traffic shall be guarded by barriers illuminated at night. The Contractor shall be responsible for all damage to persons and property directly or indirectly caused by its operations and, under all circumstances, it must comply with the laws and regulations of the County and the State of California relative to safety of persons and property and the interruption of traffic and the convenience of the public within the respective jurisdictions.

5.52.3 The Contractor is cautioned that it must replace all improvements in rights of way and within the public streets to a condition equal to what existed prior to its entry onto the job.

5.52.4 Type and time of construction required at any road subject to interference by Contract work will be determined by those authorities responsible for maintenance of said road. It shall be the responsibility of the Contractor to determine the nature and extent of all such requirements, including provision of temporary detours as required; however, any construction right of way obtained by the District at affected roadways will be adequate for provision of all required detours. As required at any road crossing, the Contractor shall provide all necessary flagpersons, guardrails, barricades, signals, warning signs and lighting to provide for the safety of existing roads and detours. Immediately after the need for temporary detours ceases, or when directed, the Contractor shall remove such detours and perform all necessary cleanup work, including replacement of fences, and removal of pavement. Included shall be all necessary replacement of existing roadway appurtenances, grading work, soil stabilization and dust control measures, as required and directed. The cost of all work specified under this section shall be borne by the Contractor.

5.52.5 The Contractor shall examine all bridges, culverts, and other structures over which it will move its materials and equipment, and before using them, it shall properly strengthen such structures as necessary for their safe operation and use. The Contractor shall be responsible for any and all injury or damage to such structures caused by reason of its operations.

5.53 HAZARDOUS MATERIALS; HAZARD COMMUNICATION

5.53.1 Proposition 65 and the California Health and Safety Code requires businesses to provide warnings prior to exposing individuals to materials listed by the Governor as chemicals "known to cause cancer or reproductive toxicity." The District may use chemicals on the Governor's list at many of its facilities. In addition, many of these chemicals are present at non-District-owned facilities and locations. Accordingly, in performing the work or services contemplated under this Contract, Contractor, its employees, agents, and subcontractors may be exposed to chemicals on the Governor's list. Except as provided in this section, Contractor is responsible for notifying its employees, agents, and subcontractors that work performed hereunder may result in exposures to chemicals on the Governor's list.

Before starting work, the Contractor shall have a written Hazard Communication Program ("HCP") in place that complies with the requirements of section 5194 of Title 8 of the California Code of Regulations, including the requirements of 8 C.C.R. section 5194(e). The information in the Contractor's HCP must include the methods by which the Contractor will communicate to the District which hazardous substances it will use and store on the job site(s) to which the District's and Contractor's employees and subcontractors may be exposed. The Contractor will submit its HCP to the District at the same time as submittal of its initial project schedules as provided in section 5.31 of these General Conditions. The Contractor also will provide copies of safety data sheets ("SDS") for all hazardous substances brought onto and used or stored on the job site(s). The Contractor also will ensure that all hazardous substances are marked with Proposition 65 and any other visible warning labels as required by law. Whenever possible, the Contract shall provide

SDS for all hazardous substances to the District prior to bringing a hazardous substance onto a job site, but will provide all SDS by no later than the time the hazardous substance is physically brought onto the site. The District will communicate the Contractor's HCP and SDS information to the District's employees who work on or will enter the job site(s). The District will provide the Contractor with a copy of the District's HCP and SDS information specific to District operations on the job site(s). The Contractor shall, in turn, convey this information to its employees and subcontractors. During the course of the work, the Contractor will keep copies of both its and the District's HCP, SDS and other relevant information at Contractor's office on the job site(s).

5.53.2 If the Work includes the construction, alteration, improvement, or maintenance of electric power generation, control, transformation, transmission or distribution lines or equipment within the meaning of Code of Federal Regulations title 29, sections 1910 or 1926, then the Contractor will implement and comply with the requirements of the "contract employer" as described and set forth in said sections including, but not limited to, the obligations to properly train the Contractor workers on safety-related work practices and procedures, exchange information with the District concerning unique hazardous conditions presented by the Work, instruct the Contractor workers about the hazardous conditions relevant to the Work, and coordinate with the District on safety-related work rules and procedures. In cases of Work, where it is determined that the worksite contains an oxygen deficient atmosphere or harmful dusts, fumes, mists, vapors, or gases that may give rise to the harmful exposure of employees, Contractor shall manage such hazards by complying with the requirements of section 1528 et seq. of Title 8 of the California Code of Regulations and section 1926 of Title 29 of the Code of Federal Regulations. The Contractor also shall be responsible for transmitting safety-related information under sections 1910 and 1926 with any subcontractors retained by it to perform electrical-related Work under the Contract.

5.54 RESPONSIBILITY FOR REPAIR OF FACILITIES

All public or private facilities, including but not limited to canals, structures, telephone cables, roadways, curbs, gutters, parking lots, private drives, levees and embankments for creeks, ponds and reservoirs disturbed during construction of the work shall be repaired and/or replaced by the Contractor to match facilities existing prior to construction. In addition, the Contractor shall be responsible for any settlement damage to such facilities or adjoining areas for a period of one year after acceptance of such required facilities.

5.55 DISTRICT'S REPAIR

In the event the Contractor refuses or neglects to make good any loss or damage for which it is responsible under this Contract, the District may itself, or by the employment of others, make good any such loss or damage, and the cost and expense of doing so, including any reasonable engineering, legal and other consultant fees, and any costs of administrative and managerial services, shall be charged to the Contractor. Such costs and expenses may be deducted by the District from claims for payment made by the Contractor for work completed or remaining to be completed.

5.56 CONTRACTOR'S LICENSE NOTICE

STATEMENT REQUIRED BY CALIFORNIA BUSINESS & PROFESSIONS CODE SECTION 7030: "CONTRACTORS ARE REQUIRED BY LAW TO BE LICENSED AND REGULATED BY THE CONTRACTORS STATE LICENSE BOARD WHICH HAS JURISDICTION TO INVESTIGATE COMPLAINTS AGAINST CONTRACTORS IF A COMPLAINT REGARDING A PATENT ACT OR OMISSION IS FILED WITHIN FOUR YEARS OF THE DATE OF THE ALLEGED VIOLATION. A COMPLAINT REGARDING A LATENT ACT OR OMISSION PERTAINING TO STRUCTURAL DEFECTS MUST BE FILED WITHIN 10 YEARS OF THE DATE OF THE ALLEGED VIOLATION. ANY QUESTIONS CONCERNING A CONTRACTOR MAY BE REFERRED TO THE REGISTRAR, CONTRACTORS STATE LICENSE BOARD, P.O. BOX 26000, SACRAMENTO, CALIFORNIA 95826."

5.57 PUBLIC WORKS CONTRACTOR REGISTRATION

In accordance with California Labor Code Section 1771.1(a), a contractor or subcontractor shall not be qualified to bid on, be listed in a bid proposal, subject to the requirements of Section 4104 of the Public Contract Code, or engage in the performance of any contract for public work, as defined in this Division 2, Part 7, Chapter 1 of the Labor Code (commencing with Section 1720), unless currently registered and qualified to perform public work pursuant to Section 1725.5 of the Labor Code. In accordance with Labor Code section 1771.4(a)(1), this project is subject to compliance monitoring and enforcement by the Department of Industrial Relations.

5.58 INSURANCE

5.58.1 The Contractor shall procure and maintain for the duration of the Contract, and for ten years thereafter, the following insurance against claims for injuries to persons or damages to property which may arise from or in connection with the performance of the work hereunder by the Contractor, its agents, representatives, employees or subcontractors.

5.58.1.1 General Liability - Commercial General Liability (CGL) - Insurance Services Office (ISO) Commercial General Liability Coverage (Occurrence Form CG 00 01) including products and completed operations, property damage, bodily injury, personal and advertising injury with limit of at least five million dollars ($5,000,000) per occurrence or the full per occurrence limits of the policies available, whichever is greater. If a general aggregate limit applies, either the general aggregate limit shall apply separately to this project/location (coverage as broad as the ISO CG 25 03, or ISO CG 25 04 endorsement provided to District) or the general aggregate limit shall be twice the required occurrence limit.

District, its directors, officers, employees, and authorized volunteers are to be given insured status (at least as broad as ISO Form CG 20 10 11 85 or if not available, through the addition of both CG 20 10 10 01 and CG 20 37 10 01, with respect to liability arising out of work or operations performed by or on behalf of the Contractor including materials, parts, or equipment furnished in connection with such work or operations. General liability coverage can be provided in the form of an endorsement to the Contractor’s insurance.

5.58.1.2 Automobile Liability - Insurance Services Office (ISO) Business Auto Coverage (Form CA 00 01), covering Symbol 1 (any auto) with limit of one million dollars ($1,000,000) for bodily injury and property damage each accident.

5.58.1.3 Workers' Compensation Insurance - The Contractor shall provide workers' compensation coverage as required by the State of California, with Statutory Limits, and Employer's Liability Insurance with limit of no less than $1,000,000 per accident for bodily injury or disease.

5.58.1.4 Builder's Risk – (Course of Construction) - insurance utilizing an "All Risk" (Special Perils) coverage form with limits equal to the completed value of the project and no coinsurance penalty provision. Notwithstanding the policy duration required in section 5.58.1, the insurance coverage required by this section 5.58.1.4 shall be maintained at least until Final Completion occurs and the Project is accepted by District as provided in section 5.67.

If the Contractor maintains broader coverage and/or higher limits than the minimums shown above, the District requires and shall be entitled to the broader coverage and/or higher limits maintained by the Contractor. Any available insurance proceeds in excess of the specified minimum of insurance and coverage shall be available to the District. Furthermore, the above minimum insurance coverage limits can be met through provision of umbrella or excess policy insurance coverage consistent with the provisions of this section 5.58.

5.58.2 Any deductibles or self-insured retentions must be declared to and approved by the District. At the option of the District, either: the insurer shall reduce or eliminate such deductibles or self-insured retentions as respects the District, its officers, officials, employees and volunteers; or the Contractor shall procure a bond or other security guaranteeing payment of losses and related investigations, claim administration and defense fees, costs and expenses. All policies that include a self-insured retention shall include a provision that payments of defense costs and damages (for bodily injury, property damage, personal injury or any other coverages included in the policy) by any party, including additional insureds and insurers, shall satisfy the self-insured retention limits.

5.58.3 The general liability and automobile liability policies are to contain, or be endorsed to contain, the following provisions:

5.58.3.1 Waiver of Subrogation (also known as Transfer of Rights of Recovery Against Others to Us): The Contractor hereby agrees to waive rights of subrogation to obtain endorsement necessary to affect this waiver of subrogation in favor of the District, its directors, officers, employees, and authorized volunteers, for losses paid under the terms of this coverage which arise from work performed by the Named Insured for the District; this provision applies regardless of whether or not the District has received a waiver of subrogation from the insurer.

5.58.3.2 The District, its officers, officials, employees, agents and volunteers are to be covered as additional insureds as respects: liability arising out of activities performed by or on behalf of the Contractor, products and completed operations of the Contractor; premises owned, occupied or used by the Contractor; or automobiles owned, leased, hired or

borrowed by the Contractor. The coverage shall contain no special limitations on the scope of protection afforded to the District, its officers, officials, employees, agents or volunteers. The additional insured coverage or endorsement shall comply with California Insurance Code section 11580.04.

5.58.3.3 For any claims related to this project, the Contractor's insurance general and automobile liability coverage shall be primary insurance as respects the District, its officers, officials, employees, agents and volunteers. Any insurance or self-insurance maintained by the District, its officers, officials, employees, agents or volunteers shall be excess of the Contractor's insurance and shall not contribute with it.

5.58.3.4 Any failure to comply with reporting or other provisions of the policies including breaches of warranties shall not affect coverage provided to the District, its officers, officials, employees, agents or volunteers.

5.58.3.5 The Contractor's insurance shall apply separately to each insured against whom claim is made or suit is brought, except with respect to the limits of the insurer's liability.

5.58.3.6 Each insurance policy required by this section shall be endorsed to state that coverage shall not be suspended, voided, canceled by either party, or reduced in coverage or in limits except after 30 days' prior written notice by U.S. mail has been given to the District, or after 10 days' written notice in the case of cancellation for non-payment of premium.

5.58.4 Course of Construction Coverage Requirements. Course of construction policies shall contain, or be endorsed to contain, the following provisions: (a) District shall be named as loss payee; and (b) The insurer shall waive all rights of subrogation against the District.

5.58.5 Acceptability of Insurers. Insurance is to be placed with insurers with a current A.M. Best's rating of no less than A-:VII or equivalent and that are authorized to do business and in good standing in California, unless otherwise approved by District. In the case of Workers' Compensation and Employer's Liability insurance, coverage provided by the California State Compensation Insurance Fund is acceptable.

5.58.6 Verification of Coverage. Before commencing work, Contractor shall provide to District the following proof of insurance: (a) certificate(s) of insurance on ACORD Form 25-S (or insurer's equivalent) evidencing the required insurance coverages; and (b) endorsement(s) on ISO Form CG 20 10 (or insurer's equivalent), signed by a person authorized to bind coverage on behalf of the insurer(s) and certifying the additional insured coverages, or equivalent additional insured blanket endorsement. The District reserves the right to require complete copies of all required insurance policies and/or endorsements affecting required insurance coverage at any time.

5.58.7 Subcontractors. The Contractor shall include all actions and activities of its subcontractors as insureds under its policies, or shall require each subcontractor to provide insurance coverage consistent with the foregoing and to furnish separate endorsements or

certificates to the District. All coverages for subcontractors shall be subject to all of the requirements stated in this section.

5.58.8 Obligation to Maintain Coverage. Contractor shall maintain all required insurance coverages for the period provided in this section 5.58. If any of the required coverages expire during the coverage period, Contractor shall obtain renewal or replacement coverages and deliver certificates for the renewed or replacement coverages and any required endorsements to the District at least 10 days before the expiration date of the existing coverage.

5.58.9 Survival of Guarantee. Any products/completed operations insurance coverage shall be maintained after completion of the project for the full guarantee period.

5.58.10 The requirements as to the types, limits, and the District's approval of insurance coverage to be maintained by the Contractor are not intended to and shall not in any manner limit or qualify the liabilities and obligations assumed by the Contractor under the Contract.

5.58.11 In addition to any other remedy the District may have, if the Contractor or any of the subcontractors fails to maintain the insurance coverage as required in this section 5.58, the District may obtain such insurance coverage as is not being maintained, in form and amount substantially the same as required herein, and the District may deduct the cost of such insurance from any amounts due or which may become due the Contractor under this Contract.

5.59 INDEMNITY AND DEFENSE OBLIGATION

5.59.1 To the fullest extent permitted by law, Contractor shall protect, defend, indemnify and hold harmless the District and Engineer, and their respective officers, directors, agents, employees, volunteers, representatives, boards, and consultants from and against all penalties and fines imposed by law and all loss, claim, cause of action, demand, suit, judgment, cost, damage, expense, and liability (including but not limited to court or arbitration costs and reasonable attorneys' and expert witness fees) resulting from injury to or death of persons, including without limitation employees of the District, Engineer and Contractor, or damage to or loss of property, caused by, arising out of or in any way connected with the Contractor's or its subcontractors' or suppliers' performance, operations or activities under this Contract, except to the extent the sole negligence, active negligence or willful misconduct of an indemnified party proximately causes the loss, claim, demand, cost, suit, judgment, penalty, fine, cause of action, damage, expense, or liability.

5.59.2 Contractor's duty to defend is a separate and distinct obligation from Contractor's duty to indemnify. Upon the request of an indemnified party hereunder, Contractor shall defend any suit asserting a claim covered by this indemnity and shall pay any costs and expenses that may be incurred by an indemnified party in enforcing this indemnity. The Contractor shall be obligated to defend, in all legal, equitable, administrative, or special proceedings, the District and/or Engineer, and their respective officers, directors, agents, employees, volunteers, representatives, boards, and consultants, immediately upon tender to Contractor of the claim in any form or at any stage of an action or proceeding, whether or not liability has been established. The obligation to defend extends through final judgment, including

exhaustion of any appeals. In all cases, the indemnified party shall have the right to approve counsel selected by Contractor in the defense of any legal action or with respect to any claim, which approval shall not be unreasonably withheld. In addition, the indemnified party shall have the right to participate in and be represented by counsel of its own choice and at its own expense in any legal action or with respect to any claim. The defense obligation includes an obligation to provide independent defense counsel if the Contractor asserts that liability is caused in whole or in part by the negligence or willful misconduct of an indemnified party.

5.59.3 The District may withhold from payment due Contractor hereunder such amounts as, in the District's opinion, are sufficient to provide security against all loss, damage, expense, penalty, fine, cost, claim, demand, suit, cause of action, judgment, or liability covered by the foregoing indemnity provision.

5.59.4 In any and all claims against the District or the Engineer and his consultants, and each of their officers, directors, employees and agents by any employee of the Contractor, any subcontractor, anyone directly or indirectly employed by any of them, or anyone for whose acts any of them may be liable, the indemnification obligation under this section shall not be limited in any way by any limitation on the amount or type of damages, compensation or benefits payable by or for the Contractor, any subcontractor, anyone directly or indirectly employed by any of them, or anyone for whose acts any of them may be liable under Workers' Compensation statutes, disability benefit statutes or other employee benefit statutes.

5.59.5 Neither termination of this Contract, completion of the acts to be performed under this Contract, nor the Engineer's approval or the District's acceptance of the work shall release Contractor from its obligations to indemnify and defend the District, and the Engineer, and their respective officers, directors, agents, employees, volunteers, representatives, boards, and consultants, as provided in sections 5.59.1 and 5.59.2, so long as the event upon which the claim is predicated shall have occurred prior to the effective date of any such termination or completion and arose out of or was in any way connected with performance of operations under this Contract by Contractor, its employees, agents, suppliers or subcontractors, or the employee, agent or subcontractor of any one of them,.

5.59.6 Submission of insurance certificates or submission of other proof of compliance with the insurance requirements in this Contract does not relieve Contractor from liability under this indemnification and hold harmless clause. The obligations of this indemnity section shall apply whether or not such insurance policies shall have been determined to be applicable to any of such damages or claims for damages.

5.59.7 In accordance with California Public Contract Code section 9201(b), if District receives any written third-party claim relating to work performed under this Contract, then District agrees to promptly notify Contractor about the third-party claim.

5.60 PROTECTION OF WORK

5.60.1 The Contractor shall be responsible for the care of all work until its completion and final acceptance; and it shall, at its own expense, replace damaged or lost material and repair damaged parts of the work or the same may be done at its expense by the

District and the Contractor and its sureties shall be liable therefor. The Contractor shall make its own provisions for properly storing and protecting all material and equipment against theft, injury, or damage from any and all causes. Damaged material and equipment shall not be used in the work. The Contractor shall take all risks from floods and casualties except as provided by law, and shall make no charge for the restoration of such portions of the work as may be destroyed or damaged by flood or other casualties or because of danger from flood or other casualties or for delays from such causes. The Contractor may, however, be allowed a reasonable extension of time on account of such delays, subject to the conditions hereinbefore specified.

5.60.2 The Contractor shall effectively secure and protect adjacent property and structures, livestock, crops and other vegetation. If applicable, the Contractor shall open fences on or crossing the right of way and install temporary gates of sound construction thereon so as to prevent the escape of livestock. Adjacent fence posts shall be adequately braced to prevent the sagging or slackening of the wire. Before such fences are opened, the Contractor shall notify the owner or tenant of the property and, where practicable, the opening of the fence shall be in accordance with the wishes of said owner or tenant. The Contractor shall be responsible that no loss or inconvenience shall accrue to the owner or tenant by virtue of its fences having been opened or the gate not having been either shut or attended at all times. Where special types of fences are encountered, the Contractor shall install temporary gates made of similar materials and of suitable quality to serve the purposes of the original fences. In all cases when the Contractor removes fences to obtain work room, it shall provide and install temporary fencing as required, and on completion of construction shall restore the original fence to the satisfaction of the Engineer. All costs of providing, maintaining and restoring gates and fencing shall be borne by the Contractor. The Contractor shall provide and maintain all passageways, guard fences, lights and other facilities for protection required by public authority or local conditions.

5.60.3 The Contractor shall use extreme care during construction to prevent damage from dust to crops and adjacent property. The Contractor, at its own expense, shall provide adequate dust control for the right of way and take other preventative measures as directed by the Engineer.

5.60.4 The Contractor shall be responsible for all damage to any property resulting from trespass by the Contractor or its employees in the course of their employment, or subcontractors or their employees in the course of their employment, or anyone directly or indirectly employed by any of them, where such trespass was committed with or without the consent or knowledge of the Contractor.

5.60.5 The Contractor shall see that the worksite is kept drained and free of all ground water and any other water which may impede the progress or execution of the Contract work.

5.60.6 The Contractor shall be responsible for any damage caused by drainage or water runoff from construction areas and from construction plant areas.

5.60.7 In an emergency affecting the safety of life, or of the work, or of adjoining property, the Contractor, without special instruction or authorization from the Engineer, is hereby permitted to act at its discretion to prevent such threatened loss or injury, and it shall so

act without appeal if so instructed or authorized. Should the Engineer deem an emergency condition to exist, the Contractor shall immediately do those things and take those steps ordered by the Engineer. The decision of the Engineer in this respect shall be final and conclusive. Any claims for compensation made by the Contractor on account of emergency work shall be determined as specified under section 5.3.

5.60.8 Except as provided by California Government Code section 4215, the Contractor shall be responsible for the removal, relocation and protection of all public and private utilities, including irrigation facilities in the nature of utilities, located on the site of the construction project if and to the extent that the same are identified in the Contract Documents; and the Contractor shall not be entitled to any extension of time or claim for damages for extra compensation in connection therewith. If and to the extent that such utilities or facilities are not identified in the Contract Documents, as between the Contractor and the District, the District will be responsible for the cost of their removal, relocation or protection, as the case may be, but the Contractor shall perform any such work in conformance with applicable provisions of section 5.3, if so directed by the Engineer and in such situation the Contractor shall not be responsible for delay in completion of the project caused by the failure of the District or the owner of the utility to provide for such removal or relocation. If the Contractor, while performing the Contract, discovers utility or irrigation facilities not identified by the District in the Contract Documents, it shall immediately notify the Engineer in writing.

5.60.9 When the work to be performed under the Contract crosses or otherwise interferes with existing streams, watercourses, canals, farm ditches, pipelines, drainage channels, or water supplies, the Contractor shall provide for such watercourse or pipelines and shall perform such construction during the progress of the work so that no damage will result to either public or private interests; and the Contractor shall be liable for all damage that may result from failure to so provide during the progress of the work.

5.61 ACCIDENTS

5.61.1 The Contractor shall provide and maintain, in accordance with California Labor Code section 6708 and Cal/OSHA requirements, adequate emergency first aid treatment for its employees and anyone else who may be injured in connection with the work.

5.61.2 The Contractor shall promptly report in writing to the Engineer all accidents of any nature arising out of, or in connection with, the performance of the work, on or adjacent to the site, which caused death, personal injury, or property damage, giving full details and statements of witnesses. In addition, if death or serious injury or serious damage are caused, the accident shall be reported immediately by telephone or messenger to the District and the Engineer.

5.61.3 If any claim is made by anyone against the Contractor or any subcontractor on account of any accident, the Contractor shall promptly report the facts in writing to the Engineer, giving full details of the claim.

5.62 NO PERSONAL LIABILITY

Neither the District, the Engineer, nor any of their officers, directors, agents, or employees shall be personally responsible for any liability arising under the Contract, except such obligations as are specifically set forth herein.

5.63 MEASUREMENT OF QUANTITIES

Where the Contract provides for payment on a lump sum price basis, no measurement of quantity will be made. Where the Contract provides for payment on a unit price basis, the quantities of work performed will be computed by the Engineer on the basis of measurements taken by the Engineer, and these measurements shall be final and conclusive. All quantities of work computed under the Contract shall be based upon measurements by the Engineer according to United States Measurements and Weights. Methods of measurement are specified herein and in the Specifications.

5.64 SCOPE OF PAYMENT

5.64.1 The Contractor shall accept the compensation provided in the Contract as full payment for furnishing all labor, materials, tools, equipment, and incidentals necessary to the completed work and for performing all work contemplated and embraced under the Contract; also for loss or damage arising from the nature of the work, or from the action of the elements, or from any unforeseen difficulties which may be encountered during the prosecution of the work until the acceptance by the District and for all risks of every description connected with the prosecution of the work; also for all expenses incurred in consequence of the suspension or discontinuance of the work as provided in the Contract; and for completing the work according to the Specifications and Plans. Neither the payment of any estimate nor of any retained percentage shall relieve the Contractor of any obligation to make good any defective work or material.

5.64.2 No compensation will be made in any case for loss of anticipated profits. Increased or decreased work involving supplemental agreements will be paid for as provided in such agreements.

5.65 PROGRESS ESTIMATE

For each calendar month of Contract work, the Engineer will prepare a progress estimate of all work performed under the Contract. Within the first ten (10) days of each succeeding calendar month, the Engineer will prepare in writing and certify to the District, an estimate which in his opinion is a fair approximation of the value of all work done under the Contract, including any amounts due the Contractor for extra work and change orders. In arriving at the value of the work done, the Engineer will give consideration to the value of labor and materials which have been incorporated into the permanent work by the Contractor during the preceding month. Consideration will not be given to preparatory work done or for materials or equipment on hand. In order to assist the Engineer, the Contractor shall furnish the Engineer with copies of invoices for all such items delivered to the job site and incorporated into the work.

5.66 PROGRESS PAYMENTS

5.66.1 Unless otherwise provided for at a different rate in the Invitation to Bid and the Contract, the District will pay the Contractor ninety-five (95%) percent of the amount of each properly submitted and undisputed progress payment request. Five (5%) percent, or any higher rate specified in the Invitation to Bid and the Contract, of the amount of each payment request shall be retained by the District until final completion and acceptance of all work under the Contract; provided, however, that if the Engineer, at any time after fifty (50%) percent of the work has been completed, finds that satisfactory progress is being made, the District may, in its sole discretion, pay any or all of the remaining progress payments in full or at a lower retention. In no case shall the District make a progress payment to the Contractor that exceeds one hundred percent (100%) of the value of the work actually completed to the date of the payment request.

5.66.2 The Contractor may invoice the District for no more than seventy-five (75%) percent of the cost of materials and equipment stored onsite, as long as the material or equipment has been inspected and approved by the Engineer or the District's representative, the quantity of material or equipment can be determined to the District's satisfaction after Contractor delivery of a paid invoice for such materials or equipment, and the materials or equipment are properly stored and protected in accordance with the manufacturer's recommendations. The Contractor retains liability for any damage or degradation of the quality of stored materials and equipment until after they are incorporated into the work and the work is approved by the District in accordance with the applicable requirements of the Contract Documents.

5.66.3 Within the first ten (10) days of each succeeding calendar month, the Contractor shall submit a completed and signed progress payment request form with its estimate of the Work completed during the prior month and the work completed to date in a format corresponding to the unit price schedule and accepted cost breakdown. In accordance with California Public Contract Code section 20104.50, a written payment request from the Contractor shall be reviewed by the Engineer as soon as practicable in order to determine whether it is proper. If it is determined not to be a proper payment request suitable for payment, then the Engineer shall return it to the Contractor with a written explanation of the deficiencies as soon as practicable, but not later than 7 days after receipt of the payment request. The Engineer will be available to meet to discuss the returned progress payment request in an attempt to reach an agreement thereon prior to its resubmittal(s). Following such a meeting, the Contractor shall submit a revised payment request, which reflects the changes, agreed upon in the above-mentioned meeting. When the Contractor's revised payment request conforms with the Engineer's evaluation, the Engineer will certify payment to the Contractor in conformance with section 5.66.4. When such an agreement cannot be reached, the Engineer's progress estimate will be used.

5.66.4 If the payment request is determined to be properly submitted and is undisputed, the Engineer will certify the payment as provided above and the District shall make the payment to the Contractor within 30 days after receipt of the payment request. If a properly submitted and undisputed payment request is not paid within this 30-day period, then the District shall pay interest on the overdue amount to the Contractor at the legal rate set forth at California Code of Civil Procedure section 685.010. This section shall not apply if District funds

are not available for payment of the payment request or if payment is delayed due to an audit inquiry by the financial officer of the District.

5.66.5 The Contractor may, in accordance with California Public Contract Code section 22300, substitute securities for any monies which the District may withhold to insure performance under the Contract. Alternatively, on written request of the Contractor and at its expense, the District shall make payments of the retention earnings directly to an escrow agent pursuant to an escrow agreement entered into consistent with the terms of Public Contract Code section 22300.

5.66.6 When, in the judgment of the Engineer, the work is not proceeding in accordance with the provisions of the Contract, or when in his judgment the total amount of the work done since the last estimate amounts to less than $1,000, no pay estimate will be prepared and no progress payment will be made.

5.66.7 No progress estimate or payment shall be considered to be an approval or acceptance of any work, materials or equipment. Estimated amounts and values of work done and materials and equipment incorporated into the work will be conformed with actual amounts and values as they become available in subsequent progress estimates, progress payments and the final estimate and payment. All estimates and payments will be subject to correction in subsequent progress estimates and payments and the final estimate and payment.

5.66.8 It is mutually agreed between the parties to the Contract that no payments made under the Contract, including progress payments and the final payment, shall be evidence of the performance of the Contract, either wholly or in part, and no payment shall be construed to be an acceptance of any defective or incomplete work or improper materials.

5.66.9 District reserves the right to make payments jointly to the order of the Contractor and to any of its subcontractors or suppliers that might have a right to file a stop notice with the District. The District shall have no obligation to pay or to ensure the payment of money to a subcontractor or supplier, except as may otherwise be required by law.

5.66.10 Each progress payment made to the Contractor in accordance with the Engineer's determination of progress payment requests is contingent upon the Contractor furnishing the District with a signed written waiver and release of all claims against the District arising out of or in any way connected to the Contract. Disputed Contract claims must be specifically stated and excluded by the Contractor from the operation of the waiver and release. The waiver and release shall be substantially in the form provided in Civil Code sections 8132 (Exhibit A) or 8134 (Exhibit B). The Contractor may only use the conditional waiver and release if the District does not pay all or a portion of a progress payment estimate submitted by the Contractor and the Contractor disputes the District's determination.

In the event that the Contractor fails or refuses to furnish the District with a signed written waiver and release of all claims against the District arising out of or in any way connected to the Contract, Contractor's acceptance of each progress payment shall be Contractor's release of all claims against the District in relation to all work paid to date to the fullest extent permitted by law.

CONDITIONAL WAIVER AND RELEASE ON PROGRESS PAYMENT (EXHIBIT A)

NOTICE: THIS DOCUMENT WAIVES THE CLAIMANT'S LIEN, STOP PAYMENT NOTICE, AND PAYMENT BOND RIGHTS EFFECTIVE ON RECEIPT OF PAYMENT. A PERSON SHOULD NOT RELY ON THIS DOCUMENT UNLESS SATISFIED THAT THE CLAIMANT HAS RECEIVED PAYMENT.

Identifying Information

Name of Claimant: _____
Name of Customer: _____
Job Location: _____
Owner: _____
Through Date: _____

Conditional Waiver and Release

This document waives and releases lien, stop payment notice, and payment bond rights the claimant has for labor and service provided, and equipment and material delivered, to the customer on this job through the Through Date of this document. Rights based upon labor or service provided, or equipment or material delivered, pursuant to a written change order that has been fully executed by the parties prior to the date that this document is signed by the claimant, are waived and released by this document, unless listed as an Exception below. This document is effective only on the claimant's receipt of payment from the financial institution on which the following check is drawn:

Maker of Check: _____
Amount of Check: $ _____
Check Payable to: _____

Exceptions

This document does not affect any of the following:

(1) Retentions.

(2) Extras for which the claimant has not received payment.

(3) The following progress payments for which the claimant has previously given a conditional waiver and release but has not received payment:
Date(s) of waiver and release: _____
Amount(s) of unpaid progress payment(s): $ _____

(4) Contract rights, including (A) a right based on rescission, abandonment, or breach of contract, and (B) the right to recover compensation for work not compensated by the payment.

Signature

Claimant's Signature: _____
Claimant's Title: _____
Date of Signature: _____

UNCONDITIONAL WAIVER AND RELEASE ON PROGRESS PAYMENT (EXHIBIT B)

NOTICE TO CLAIMANT: THIS DOCUMENT WAIVES AND RELEASES LIEN, STOP PAYMENT NOTICE, AND PAYMENT BOND RIGHTS UNCONDITIONALLY AND STATES THAT YOU HAVE BEEN PAID FOR GIVING UP THOSE RIGHTS. THIS DOCUMENT IS ENFORCEABLE AGAINST YOU IF YOU SIGN IT, EVEN IF YOU HAVE NOT BEEN PAID. IF YOU HAVE NOT BEEN PAID, USE A CONDITIONAL WAIVER AND RELEASE FORM.

Identifying Information

Name of Claimant: _____
Name of Customer: _____
Job Location: _____
Owner: _____
Through Date: _____

Unconditional Waiver and Release

This document waives and releases lien, stop payment notice, and payment bond rights the claimant has for labor and service provided, and equipment and material delivered, to the customer on this job through the Through Date of this document. Rights based upon labor or service provided, or equipment or material delivered, pursuant to a written change order that has been fully executed by the parties prior to the date that this document is signed by the claimant, are waived and released by this document, unless listed as an Exception below. The claimant has received the following progress payment:
$ _____.

Exceptions

This document does not affect any of the following:

(1) Retentions.

(2) Extras for which the claimant has not received payment.

(3) Contract rights, including (A) a right based on rescission, abandonment, or breach of contract, and (B) the right to recover compensation for work not compensated by the payment.

Signature
Claimant's Signature: _____
Claimant's Title: _____
Date of Signature: _____

5.67 COMPLETION AND FINAL ACCEPTANCE

5.67.1 The following definitions govern in interpreting this article and wherever such terms may appear in the Contract Documents:

5.67.1.1 "Final Completion" means the time when the work has been fully completed in accordance with the Contract Documents and is ready for acceptance and final payment by the District.

5.67.1.2 "Final Inspection" means the inspection conducted by the District after to verify that the work has reached Final Completion.

5.67.1.3 "The Final Punch List" is the listing of items that, in the Engineer's opinion, remain uncompleted after Substantial Completion but that must be completed by the Contractor prior to Final Completion.

5.67.1.4 "Semi-Final Inspection" means that inspection conducted by the Engineer to determine if the work is Substantially Complete.

5.67.1.5 "Substantial Completion" means the work has progressed to the point that: (1) the work is ready for beneficial use and occupancy by the District for the intended purpose, (2) all fire and life safety work has been completed, inspected and accepted, (3) all mechanical and process systems and equipment are complete and have been put in automatic operation, (4) the total value of uncompleted work is less than one-half of one percent of the Contract Price and any approved cost extensions and (5) completing the work will not significantly interfere with the District's convenience, or use or cost of operating the work.

5.67.2 When specifically provided for in the Contract Documents or when agreed to in writing by the District and the Contractor, the District may begin using a portion of the work even though it is not Substantially Complete. In such a case, the Contractor, the District and the Engineer shall first agree on and document responsibilities for security, operation, safety, maintenance, utilities, insurance, warranties, and guarantees for that portion of the work being used by the District. The District, the Contractor and the Engineer shall inspect such portion of the work and shall prepare a list of work to be completed or corrected before final acceptance. The District's use of any portion of the work shall not constitute final acceptance of that portion of the work prior to Final Completion and acceptance of the work as a whole. The District shall allow the Contractor reasonable access to complete or correct work in areas being used by the District. Partial beneficial occupancy shall not relieve the Contractor of Liquidated Damages or waive any of the District's rights under the Contract unless the Contract Documents expressly provide for and identify such portion of the work to be considered Substantially Complete before the remaining portions of the work or waiver of specific District rights.

5.67.3 When the Contractor considers the work nearly complete, the Contractor shall review the Contract Documents, inspect the work and prepare a list of deficiencies (Punch List). When the Punch List is prepared, the Contractor will deliver copies to the Engineer and the District. The Contractor shall complete or correct the items on the Punch List until, in the Contractor's opinion, the work is Substantially Complete and ready for occupancy and use by the District. The Contractor shall then deliver the completed Punch List to the Engineer and notify the

Engineer in writing that the Contractor believes the work is Substantially Complete and ready for Semi-Final Inspection.

5.67.4 After the Contractor notifies the Engineer in writing that it believes the work is substantially complete, the Engineer will conduct the Semi-Final Inspection and may add additional items to the Contractor's Punch List. As a result of this inspection, the Engineer may determine that: (1) the work is not sufficiently complete to warrant a Semi-Final Inspection, additions to the Contractor's Punch List, or the preparation of a Final Punch List; (2) the work is sufficiently complete for the Engineer to prepare a Final Punch List but certain incomplete or Defective work prohibits use of the work for its intended purpose and therefore, the work is not Substantially Complete; or (3) that the work is Substantially Complete and usable for its intended purpose and the Engineer can prepare a Final Punch List. In preceding cases (1) and (2), the Contractor shall continue the work and call for a second Semi-Final Inspection when it believes the work is ready. If the Contractor does not achieve Substantial Completion on the second attempt, it shall reimburse the District the cost of the Engineer's services for additional inspections. In case (3), the Engineer will prepare a Final Punch List and a notice of Substantial Completion, which shall state the time agreed to by the District and the Contractor, not to exceed 30 days, in which the Contractor shall complete all remaining Punch List items and ready the work for Final Inspection. The Engineer shall attach a copy of the Final Punch List to the notice of Substantial Completion. Time to complete punch list items provided in this section 5.67.4 is for the convenience of the District and is intended as a deadline; and therefore, nothing in this section shall extend the time of completion for the fixed in the Contract Documents or excuse the failure of the Contractor to timely deliver the work as complete in accordance with the Contract Documents.

5.67.5 When the Contractor has completed or corrected all items on the Engineer's Final Punch List and has made all required final submittals, the Contractor shall give the Engineer written notice that the work is ready for Final Inspection and acceptance and upon receipt of a final Application for Payment, the Engineer shall make a Final Inspection. If the Engineer finds the work is not fully complete, it shall notify the Contractor of items still requiring completion or correction. The Contractor shall immediately correct these deficiencies and call for a re-inspection. When, on the basis of its knowledge of the work, observations and inspections, the Engineer finds that the work is acceptable and fully complete in accordance with the Contract Documents, and when all final submittals have been made, the Engineer will recommend that the District issue and file a Notice of Completion designating Final Completion of the work, make Final Payment and accept the work in accordance with the terms and conditions of the Contract Documents.

5.67.6 The Engineer's failure to include an item on the Final Punch List, to make the Semi-Final or the Final Inspection, or to recommend final acceptance shall not alter the Contractor's responsibility to complete all work in accordance with the Contract Documents. If any lien or stop notice remains unsatisfied, the Contractor shall immediately take all steps necessary to remove any such lien or stop notice before Final Payment is made.

5.67.7 The making of Final Payment shall constitute a waiver of claims by the Contractor except those arising from:

5.67.7.1 Liens, claims, security interests or encumbrances arising out of the Contract and unsettled;

5.67.7.2 Failure of the work to comply with the requirements of the Contract Documents; or

5.67.7.3 Terms of the one-year guarantee period and special warranties required by the Contract Documents.

5.67.7.4 Any of the Contractor's continuing obligations under the Contract Documents.

5.68 FINAL PAYMENT

Within 10 days after the date of completion and Contractor's delivery to the District of a complete release of all liens arising out of this Contract, or receipts in full covering all labor, materials and equipment for which a lien could be filed, or a bond satisfactory of the District to defend and indemnify the District against such liens, the District shall accept the work and file in the office of the County Recorder, a Notice of Completion of the work herein agreed to be done by the Contractor. On the expiration of 40 days after the recordation of such Notice of Completion and there being no liens or stop notices filed, the difference between said final estimate and all payments theretofore made to the Contractor shall be due and payable to the Contractor, subject to any requirements concerning the furnishing of a maintenance bond, and excepting only such sum or sums as may be withheld or deducted in accordance with the provisions of this Contract or as required by law. All prior certifications upon which partial payments may have been made, being merely estimates, shall be subject to correction in the final certificate. In accordance with California Public Contract Code section 7107(c), in the event of a dispute between the District and the Contractor, the District may withhold from the final payment an amount not to exceed 150% of the disputed amount. If any liens are filed or exist after Final Payment is made, the Contractor shall refund to the District all money that the District may be compelled to pay in discharging such liens, including all costs and reasonable attorney's fees.

5.69 FINAL RELEASE

Final payment to the Contractor in accordance with the approved final estimate is contingent upon the Contractor furnishing the District with a signed written waiver and release of all claims against the District arising out of or in any way connected to the Contract. Disputed Contract claims in stated amounts may be specifically excluded by the Contractor from the operation of the waiver and release. The waiver and release shall be substantially in the form provided in Civil Code sections 8138 (Exhibit A) or 8136 (Exhibit B). The Contractor may only use the conditional waiver and release form if the District does not pay all or a portion of the final payment estimate submitted by the Contractor and the Contractor disputes the District's determination on such estimate. In the event the Contractor fails to furnish the District with a signed written waiver and release of all claims against the District arising out of or in any way connected to the Contract, Contractor's acceptance of final payment is Contractor's release of all claims against the District to the fullest extent permitted by law.

UNCONDITIONAL WAIVER AND RELEASE ON FINAL PAYMENT (EXHIBIT A)

NOTICE TO CLAIMANT: THIS DOCUMENT WAIVES AND RELEASES LIEN, STOP PAYMENT NOTICE, AND PAYMENT BOND RIGHTS UNCONDITIONALLY AND STATES THAT YOU HAVE BEEN PAID FOR GIVING UP THOSE RIGHTS. THIS DOCUMENT IS ENFORCEABLE AGAINST YOU IF YOU SIGN IT, EVEN IF YOU HAVE NOT BEEN PAID. IF YOU HAVE NOT BEEN PAID, USE A CONDITIONAL WAIVER AND RELEASE FORM.

Identifying Information

Name of Claimant: _____
Name of Customer: _____
Job Location: _____
Owner: _____

Unconditional Waiver and Release

This document waives and releases lien, stop payment notice, and payment bond rights the claimant has for all labor and service provided, and equipment and material delivered, to the customer on this job. Rights based upon labor or service provided, or equipment or material delivered, pursuant to a written change order that has been fully executed by the parties prior to the date that this document is signed by the claimant, are waived and released by this document, unless listed as an Exception below. The claimant has been paid in full.

Exceptions
This document does not affect any of the following:
Disputed claims for extras in the amount of: $ _____

Signature
Claimant's Signature: _____
Claimant's Title: _____
Date of Signature: _____

CONDITIONAL WAIVER AND RELEASE ON FINAL PAYMENT (EXHIBIT B)

NOTICE: THIS DOCUMENT WAIVES THE CLAIMANT'S LIEN, STOP PAYMENT NOTICE, AND PAYMENT BOND RIGHTS EFFECTIVE ON RECEIPT OF PAYMENT. A PERSON SHOULD NOT RELY ON THIS DOCUMENT UNLESS SATISFIED THAT THE CLAIMANT HAS RECEIVED PAYMENT.

Identifying Information
Name of Claimant: _____
Name of Customer: _____
Job Location: _____
Owner: _____

Conditional Waiver and Release

This document waives and releases lien, stop payment notice, and payment bond rights the claimant has for labor and service provided, and equipment and material delivered, to the customer on this job. Rights based upon labor or service provided, or equipment or material delivered, pursuant to a written change order that has been fully executed by the parties prior to the date that this document is signed by the claimant, are waived and released by this document, unless listed as an Exception below. This document is effective only on the claimant's receipt of payment from the financial institution on which the following check is drawn:
Maker of Check: _____
Amount of Check: $ _____
Check Payable to: _____

Exceptions
This document does not affect any of the following:
Disputed claims for extras in the amount of: $_____

Signature
Claimant's Signature: _____
Claimant's Title: _____
Date of Signature: _____

5.70 RIGHT TO WITHHOLD PAYMENTS

In addition to all other rights and remedies of the District hereunder and by virtue of law, the District may withhold or nullify the whole or any part of any progress payment or withhold up to 150% of the disputed amount from the final payment (see Public Contract Code section 7107(c)) to such extent as may reasonably be necessary to protect the District from loss on account of:

5.70.1 Defective work not remedied, irrespective of when any such work be found to be defective;

5.70.2 Claims or liens filed or reasonable evidence indicating probable filing of claims or liens including, but not limited to, claims under California Labor Code sections 1775, 1776, or 1777.7;

5.70.3 Failure of the Contractor to make payments properly for labor, materials, equipment, or other facilities, or to subcontractors and/or suppliers;

5.70.4 A reasonable doubt that the work can be completed for the balance then unearned;

5.70.5 A reasonable doubt that the Contractor will complete the work within the agreed time limits;

5.70.6 Costs to the District resulting from failure of the Contractor to complete the work within the proper time; or

5.70.7 Damage to work or property.

Whenever the District shall, in accordance herewith, withhold any monies otherwise due the Contractor, written notice of the amount withheld and the reasons therefor will be given the Contractor. After the Contractor has corrected the enumerated deficiencies, the District will promptly pay to the Contractor the amount so withheld. When monies are withheld to protect the District against claims or liens of mechanics, suppliers, materialmen, subcontractors, etc., the District may at its discretion permit the Contractor to deliver a surety bond in terms and amount satisfactory to the District, indemnifying the District against any loss or expense, and upon acceptance thereof by the District, the District shall release to the Contractor monies so withheld.

5.71 WAIVER OF INTEREST

The District shall have no obligation to pay and the Contractor hereby waives the right to recover interest with regard to monies that the District is required to withhold by reason of judgment, order, statute or judicial process, or may withhold pursuant to the provisions of this Contract.

5.72 SATISFACTION OF CLAIMS AND LIENS

Neither the final payment nor any part of the retained percentage shall become due until the Contractor, if required, shall deliver to the District, a complete release of all liens and claims

arising out of this Contract, or receipts in full in lieu thereof and, if required in either case, an affidavit that so far as it has knowledge or information the releases and receipts include all the labor and material for which a lien or claim could be filed; but the Contractor may, if any subcontractor refuses to furnish a release or receipt in full, furnish a bond satisfactory to the District, to indemnify the District against any lien or claim. If any lien or claim remains unsatisfied after all payments are made, the Contractor shall refund to the District all monies that the latter may be compelled to pay in discharging such a lien, or claim, including all costs and reasonable attorney's fees.

5.73 ASSIGNMENT OF ANTI-TRUST CLAIMS

In accordance with California Public Contract Code section 7103.5, the Contractor hereby offers and agrees to assign to the District all rights, title, and interest in and to all causes of action it may have under section 4 of the Clayton Act (15 U.S.C. section 15) or under the Cartwright Act (Chapter 2 (commencing with section 16700) of part 2 of division 7 of the Business and Professions Code), arising from purchases of goods, services, or materials pursuant to the Contract Documents. This assignment shall be made and become effective at the time the District tenders final payment to the Contractor, without further acknowledgment by the parties.

5.74 AVAILABILITY AND AUDIT OF INFORMATION

5.74.1 The District's duly authorized representatives shall have, during the term of the Contract and for three years thereafter, the right to inspect, copy and audit all of the Contractor's and its subcontractors' books, accounts, records, and other material of all description, including but not limited to source documents and computer files, and to interview personnel, pertaining to the Contract to verify or review the quantity, quality, work program and progress of the work, reimbursable costs, amounts claimed by the Contractor, pricing data, estimates of cost for fixed rates including those applicable to proposed changes, and for any other reasonable purposes. “Books,” “accounts,” and “records” as used herein shall include, but not be limited to, original estimates, subcontracts, bids, proposals, purchase orders, books, documents, accounting records, papers, correspondence, project files and scheduling information, including the original Bid and all documents related thereto and to its preparation, the as-planned construction schedule and any related documents.

5.74.2 The Contractor's and its subcontractors' accounts shall be kept in accordance with generally accepted accounting principles in the particular industry and shall be kept in such a manner and in sufficient detail to clearly disclose the nature and amounts of the different items of service and cost pertaining to the Contract and the basis for charges or allocations to the Contract. The Contractor and its subcontractors shall preserve all such accounts and records for a period of three years after the term of the Contract.

5.74.3 The Contractor shall include the necessary provisions in its subcontracts to ensure that its subcontractors comply with this provision.

5.74.4 The parties acknowledge that this Contract, and performance and payments under this Contract, are subject to examination and audit by the State Auditor

General for three years following final payment under this Contract pursuant to California Government Code section 8546.7.

5.75 INTEGRATION

The Contract Documents constitute the sole, final, complete, exclusive and integrated expression and statement of the terms of this contract among the parties concerning the subject matter addressed herein, and supersedes all prior negotiations, representations or agreements, either oral or written, that may be related to the subject matter of this Contract, except those other documents that are expressly referenced in the Contract Documents.

5.76 COUNTERPARTS AND ELECTRONIC SIGNATURES

The Contract Documents may be executed in two or more counterparts, each of which shall be deemed an original, but all of which together shall constitute the same instrument or instruments. Counterparts may be delivered by facsimile, electronic mail (including PDF or any electronic signature complying with California's Uniform Electronic Transactions Act (Civ. Code, §1633.1, et seq.) or any other applicable law) or other transmission method. The parties agree that any electronic signatures appearing on the Contract Documents are the same as handwritten signatures for the purposes of validity, enforceability, and admissibility.

5.77 WAIVER

The waiver at any time by any party of its rights with respect to a default or other matter arising in connection with this Contract shall not be deemed a waiver with respect to any subsequent default or matter.

5.78 REMEDIES NOT EXCLUSIVE

The remedies provided in this Contract are cumulative and not exclusive, and are in addition to any other remedies that may be provided by law or equity. The exercise by either party of any remedy under this Contract shall be without prejudice to the enforcement of any other remedy.

5.79 SEVERABILITY

The invalidity, illegality or unenforceability of any provision of the Contract Documents shall not render the other provisions unenforceable, invalid or illegal.

5.80 GOVERNING LAW AND VENUE

Except as otherwise required by law, this Contract shall be interpreted, governed by, and construed under the laws of the State of California. The County shall be venue for any litigation concerning the enforcement or construction of this Contract.

5.81 NOTICES

Any notice, demand, invoice or other communication required or permitted to be given under this Contract shall be in writing and either served personally or sent by prepaid, first class U.S. mail and addressed as follows: for the District, either to the Engineer or the District at the addresses set forth in the Invitation to Bid; for the Contractor, at the address set forth in its Bid. Any party may change its address by notifying the other party in writing of the change of address.

(END OF GENERAL CONDITIONS.)

SECTION 6 - SPECIAL PROVISIONS

6.1 PROPOSITION 68 – STATE PARKS GRANT REQUIREMENTS

SIERRA CREEK PARK PROJECT

Statewide Park Development and Community Revitalization Program

Project No. SW-34-011 | State Contract No. C5054083

Sierra Creek Park is funded in part through the California Department of Parks and Recreation, Statewide Park Development and Community Revitalization Program, pursuant to Proposition 68, the California Drought, Water, Parks, Climate, Coastal Protection, and Outdoor Access for All Act of 2018. The Contractor and all subcontractors shall comply with all applicable requirements associated with the State grant, including the requirements identified below, to the extent applicable to the contracted work.

1. COMPLIANCE WITH APPLICABLE LAWS

Contractor shall comply with all applicable federal, State, and local laws, codes, and regulations affecting construction of the Project, including applicable construction contract requirements, building codes, health and safety codes, and accessibility requirements.

2. CALIFORNIA LABOR CODE / PREVAILING WAGE REQUIREMENTS

Contracted work shall comply with applicable California Labor Code requirements, including the requirements identified in California Labor Code section 1771.5 and other prevailing wage requirements applicable to the Project.

3. GRANT SCOPE AND APPROVED PROJECT

Contractor shall construct the Project in accordance with the approved plans, specifications, and Contract Documents. Work funded through the State grant shall remain consistent with the approved Grant Scope/Cost Estimate and applicable project elements approved by California State Parks. Changes in the GRANT SCOPE(S) must be approved in writing by the STATE. The District, as GRANTEE, shall complete the GRANT SCOPE(S) in accordance with the time of the Performance Period set forth in the State Grant Contract and under the terms and conditions of that Contract.

4. ACCESSIBILITY

The Project shall comply with all applicable accessibility requirements, including the Americans with Disabilities Act, applicable California accessibility requirements, and requirements for an accessible path of travel.

5. INSURANCE, BONDS, AND SECURITY

Contractor shall maintain all insurance, bonds, and other security required by the Contract Documents. Such requirements are intended, among other purposes, to protect the District and the State from poor workmanship, fraud, and other potential loss associated with completion of the Project.

6. PROPOSITION 68 / BOND ACT SIGNAGE

Contractor shall cooperate with the District in the maintenance of all State-required Proposition 68 / Bond Act acknowledgement signage associated with the Project. Signage has been installed at the location directed or approved by the District and in accordance with California State Parks requirements.

7. RECORDS AND DOCUMENTATION

Contractor and subcontractors shall maintain and provide to the District, upon request, records reasonably necessary for the District to document compliance with the State grant, including contracts, subcontracts, invoices, progress billings, change orders, payment documentation, and other Project expenditure records.

8. INSPECTION AND COOPERATION

Contractor shall cooperate with inspections and requests for Project information by the District and, when applicable, representatives of the California Department of Parks and Recreation. Contractor shall provide reasonable access to the Project and relevant Project documentation as required by the District.

9. NONDISCRIMINATION

Contractor shall comply with all applicable nondiscrimination requirements in performance of the Project.

10. CONTRACTOR RESPONSIBILITY

Compliance with these requirements is part of Contractor's obligations under the Contract Documents. Contractor shall promptly notify the District of any circumstance that may affect compliance with an applicable State grant requirement or the approved Project scope.

DISTRICT / GRANTEE RESPONSIBILITIES

Nothing in these requirements transfers to the Contractor responsibilities that are assigned exclusively to the District as Grantee under the State Grant Contract, including grant reimbursement requests, State reporting, grant accounting, deed restriction requirements, or other administrative obligations of the Grantee.

REFERENCE DOCUMENTS

- California Department of Parks and Recreation, Grant Administration Guide for Competitive Grant Programs, September 2020.
- Statewide Park Development and Community Revitalization Grant Contract, Sierra Creek Park, Contract No. C5054083, including amendments.

6.3 BID ITEM DESCRIPTIONS (ON-SITE)

BID ITEM DESCRIPTIONS
The descriptions below are general descriptions and do not include estimated quantities. See plans and bid summary for estimated quantities. Estimated quantities are provided as courtesy only. Actual numbers and quantities of symbols on plans prevail.

BID ITEM LIST – ON-SITE WORK

A - SITE PREPARATION

Bid Item A1 – Demolition / Clear and Grub:
The square foot price bid for this item shall include full compensation for furnishing all labor, materials, tools, equipment and incidentals; for doing all work involved in site clearing and grubbing, including removal of plants, weeds, surface materials, and other miscellaneous demolition items. This includes clear and grub operations to be done by hand (no machinery allowed) as specified in the Specifications and Plans.

Bid Item A2 – Temporary Erosion & Sediment Control:
The acreage price bid for this item shall include all costs for temporary erosion and sediment control. The item also includes labor, materials and all other work required by the Drawings and Specifications which is not specifically set forth in the Bid Form as a pay item.

Bid Item A3 – Site Grading (Rough/Fine):
The square foot price bid for this item shall include full compensation for furnishing all labor, materials, tools, equipment, and incidentals; and for performing all work involved in site grading, including rough grading, fine grading, excavation, placement and compaction of suitable on-site materials, redistribution of existing soil, shaping, contouring, slope grading, finish grading, scarification, moisture conditioning, grading adjustments, and preparation of subgrades to the lines, grades, elevations, and slopes indicated on the Drawings. The item shall include coordination with proposed site improvements, drainage features, paving, planting areas, and other improvements; removal of minor unsuitable materials within the grading limits as required; and all appurtenant work necessary to achieve the finished grades shown on the Drawings, as specified in the Specifications and Plans. The bid price shall also include all labor, equipment, materials, and other work required by the Drawings and Specifications that is not specifically identified as a separate pay item.

Bid Item A4 - Tree Removal:
The unit price bid for this item shall include full compensation for furnishing all permits, labor, materials, tools, equipment and incidentals; for doing all work involved in tree removal, including soil clearing, grubbing and removal to the depth below finish grade as specified in the Specifications and Plans.

Bid Item A5 - Tree Protection:
The lump sum price bid for this item shall include full compensation for furnishing all labor, materials, tools, equipment, and incidentals; and for performing all work involved in furnishing and installing tree protection fencing, (including procurement, delivery, layout, installation, posts, fence fabric, supports, hardware, signage), and maintenance including watering and washing off dust weekly, and disposal at the completion of construction, and all appurtenant work necessary to provide complete tree protection fencing at the locations indicated on the Drawings, as specified in the Specifications and Plans. The bid price shall also include all labor, equipment, materials, and other work required by the Drawings and Specifications that is not specifically identified as a separate pay item.

Bid Item A6 - Construction Fencing:
The linear foot price bid for this item shall include all costs for purchase, delivery, installation, and maintenance of the construction fence at top of creek and along Watt Ave as indicated on the Drawings. The item also includes labor, equipment, materials, tools, equipment, and incidentals and for doing all the work required by the Drawings and Specifications, which is not specifically set forth in the Bid Form as a pay item.

Bid Item A7 - Removal of Existing Planter / Wall:
The lump sum price bid for this item shall include full compensation for furnishing all labor, materials, tools, equipment, and incidentals; for doing all work involved in removal and disposal of existing planters and wall, including removal of entire planters and wall structures and footings, as specified in the Specifications and Plans.

Bid Item A8 - Removal of Existing Signage and Metal Bollards:
The lump sum price bid for this item shall include full compensation for furnishing all labor, materials, tools, equipment, and incidentals; for doing all work involved in removal and disposal of existing miscellaneous signage metal bollards including footings as indicated on Drawings, including removal of structures and footings, as specified in the Specifications and Plans.

B – UTILITIES

Bid Item B1 - Domestic Water Service to Building:
The lump sum price bid for this item shall include full compensation for furnishing all labor, materials, tools, equipment, and incidentals; and for performing all work involved in furnishing and installing a complete domestic water service system, extending within 5-feet of the restroom building, including procurement, delivery, trenching, excavation, installation of water meter and reduced pressure backflow, bedding, piping, fittings, valves, sleeves, tracer wire, backfill, compaction, connections, testing, flushing, disinfection, restoration of disturbed areas, and all appurtenant work necessary to provide a complete and fully operational domestic water service system in the locations indicated on the Drawings, as specified in the Specifications and Plans. The bid price shall also include all labor, equipment, materials, and other work required by the Drawings and Specifications that is not specifically identified as a separate pay item.

Bid Item B2 - Domestic Water Service tie-in to street:
The unit price bid for this item shall include full compensation for furnishing all labor, materials, tools, equipment, and incidentals; and for performing all work involved in connecting the domestic water service to the existing public water main, including procurement, delivery, excavation, trenching, fittings, valves, tapping sleeve and valve where required, service saddle, piping, connections, testing, flushing, disinfection, coordination with the water purveyor, restoration of disturbed improvements, and all appurtenant work necessary to provide a complete and operational domestic water service connection, as indicated on the Drawings and specified in the Specifications and Plans. The bid price shall also include all labor, equipment, materials, and other work required by the Drawings and Specifications that is not specifically identified as a separate pay item.

Bid Item B3 - Sewer line connection:
The allowance for this item shall include full compensation for furnishing all labor, materials, tools, equipment, permits, fees, and incidentals; and for performing all work associated with providing the sewer line connection for the restroom building, including excavation, trenching, shoring as required, subgrade preparation, bedding, sanitary sewer piping, fittings, cleanouts, connections to the restroom building and existing sewer system, testing, inspection, backfill, compaction, surface restoration, and all appurtenant work necessary to complete the sewer connection, as shown on the Drawings and specified in the Specifications and Plans. The allowance shall be used as directed by the District and adjusted based on the actual cost of the work performed.

Bid Item B4 - Drinking Fountain hookups:
The unit price bid for this item shall include full compensation for furnishing all labor, materials, tools, equipment, and incidentals; and for performing all work involved in providing drinking fountain hookups, including excavation, trenching, subgrade preparation, bedding, backfill, domestic water service piping, fittings, valves, isolation valves, pressure regulator as required, sanitary waste piping and fittings, cleanouts, connections to existing or proposed water and sanitary systems, testing, flushing, disinfection, and all appurtenant work necessary to provide complete and operational drinking fountain connections at the locations shown on the Drawings, as specified in the Specifications and Plans.

Bid Item B5 - Storm Drainage Infrastructure:
The lump sum bid for this item shall include full compensation for furnishing all labor, materials, tools, equipment, and incidentals, and for performing all work necessary to furnish and install a complete and functional storm drainage system for the park, including excavation, trenching, subgrade preparation, pipe bedding, storm drain piping, fittings, connections, 24-inch by 24-inch storm drain catch basins with grates, parking lot catch basins, storm drain structures, bubble-up drains, outlet structures, connections and discharge to the vegetated swale and stormwater planters, aggregate backfill, concrete, reinforcement, adjustment of grates and frames to finished grade, testing, and all other appurtenant work necessary to complete the storm drainage system at the locations shown on the Drawings and as specified in the Plans and Specifications.

C – HARDSCAPE

Bid Item C1 - Asphalt Pavement for Parking Lot with Aggregate Base:
The square foot price bid for this item shall include full compensation for furnishing all labor, materials, tools, equipment and incidentals; for doing all work involved in procurement and installation of pavement (HMA) for the parking lot, including installation and preparation of sub-grade, aggregate base and asphalt surfacing to the depths, any manufacturer required vapor barriers, as specified in the Specifications and Plans.

Bid Item C2 - GraniteCrete Pathway (w/ Aggregate Base):
The square foot price bid for this item shall include all costs for purchase, delivery, and installation (per manufacturers recommendation) of stabilized decomposed granite, subgrade preparation, aggregate base, and stabilizer in the areas indicated on the Drawings. The item also includes labor, equipment, materials, and all other work required by the Drawings and Specifications which is not specifically set forth in the Bid Form as a pay item.

Bid Item C3 - Concrete Seatwalls (at Entry Plaza):
The linear foot price bid for this item shall include full compensation for furnishing all labor, materials, tools, equipment, and incidentals; and for performing all work involved in furnishing and installing the concrete seatwall at the Entry Plaza, including excavation, subgrade preparation, reinforcement, forming, compaction, concrete placement, concrete additives, sealers, finishing, control and expansion joints, and all appurtenant work, complete in place, in the locations indicated on the Drawings, as specified in the Specifications and Plans.

Bid Item C4 - Concrete Retaining Walls
The linear foot price bid for this item shall include full compensation for furnishing all labor, materials, tools, equipment, and incidentals; and for performing all work involved in furnishing and installing the concrete retaining walls with integral color at the amphitheater, and restroom building, including excavation, subgrade preparation, foundation preparation, reinforcement, forming, concrete placement, concrete additives, sealers, drainage materials, weep holes, perforated drain pipe, backfill, compaction, finishing, control and expansion joints, and all appurtenant work necessary to construct the retaining wall complete in place, in the locations indicated on the Drawings, as specified in the Specifications and Plans.

Bid Item C5 - Concrete Pavement (w/ Aggregate Base):
The square foot price bid for this item shall include full compensation for furnishing all labor, materials, tools, equipment, and incidentals; and for performing all work involved in constructing concrete flatwork, including excavation, subgrade preparation, subgrade compaction, aggregate base, reinforcement, forming, concrete placement, concrete additives, finishing, curing, sealers, control and expansion joints, joint sealants, and all appurtenant work necessary to complete the installation in the locations shown on the Drawings, as specified in the Specifications and Plans.

Bid Item C6 - Concrete Pavement - Vehicular (w/ Aggregate Base):
The square foot price bid for this item shall include full compensation for furnishing all labor, materials, tools, equipment, and incidentals; and for performing all work involved in constructing concrete flatwork - vehicular, including excavation, subgrade preparation, subgrade compaction, aggregate base, reinforcement, forming, concrete placement, concrete additives, finishing, curing, sealers, control and expansion joints, joint sealants, and all appurtenant work necessary to complete the installation in the locations shown on the Drawings, as specified in the Specifications and Plans.

Bid Item C7 - Colored Concrete Pavement (aggregate Base):
The square foot price bid for this item shall include full compensation for furnishing all labor, materials, tools, equipment, and incidentals; and for performing all work involved in constructing integrally colored concrete flatwork, including excavation, subgrade preparation, subgrade compaction, aggregate base, reinforcement where specified, forming, integral color admixtures, concrete placement, concrete additives, finishing, curing, sealers, control and expansion joints, joint sealants, and all appurtenant work necessary to complete the installation in the locations shown on the Drawings, as specified in the Specifications and Plans.

Bid Item C8 - Colored Concrete Pavement - Vehicular (w/ Aggregate Base):
The square foot price bid for this item shall include full compensation for furnishing all labor, materials, tools, equipment, and incidentals; and for performing all work involved in constructing integrally colored concrete flatwork - vehicular, including excavation, subgrade preparation, subgrade compaction, aggregate base, reinforcement where specified, forming, integral color admixtures, concrete placement, concrete additives, finishing, curing, sealers, control and expansion joints, joint sealants, and all appurtenant work necessary to complete the installation in the locations shown on the Drawings, as specified in the Specifications and Plans.

Bid Item C9 - Concrete Playground Edge :
The linear foot price bid for this item shall include full compensation for furnishing all labor, materials, tools, equipment, and incidentals; and for performing all work involved in constructing the cast-in-place concrete edge for playground safety surfacing containment, including excavation, subgrade preparation, subgrade compaction, aggregate base, reinforcement, forming, concrete placement, concrete additives, finishing, curing, sealers, control and expansion joints, joint sealants, backfill, cleanup, and all appurtenant work necessary to complete the installation in the locations shown on the Drawings, as specified in the Specifications and Plans.

Bid Item C10 - Ornamental Metal Fence-60" ht (at Garden):
The linear foot price bid for this item shall include full compensation for furnishing all labor, materials, tools, equipment, and incidentals; and for performing all work involved in furnishing and installing the 5-foot-high ornamental metal fence at Garden, including shop drawings, fabrication, purchase, delivery, posts, rails, pickets, fittings, hardware, footings, concrete, surface preparation, factory and field-applied coatings, paint and finishes, and installation in accordance with the manufacturer's recommendations, complete in place at the locations shown on the Drawings, as specified in the Specifications and Plans. The bid price shall also include all appurtenant work necessary to provide a complete and functional fence system.

Bid Item C11 - Ornamental Metal Fence-48" ht (at Watt Ave.):
The linear foot price bid for this item shall include full compensation for furnishing all labor, materials, tools, equipment, and incidentals; and for performing all work involved in furnishing and installing the 4-foot-high ornamental metal fence at Watt Ave, including shop drawings, fabrication, purchase, delivery, posts, rails, pickets, fittings, hardware, footings, concrete, surface preparation, factory and field-applied coatings, paint and finishes, and installation in accordance with the manufacturer's recommendations, complete in place at the locations shown on the Drawings, as specified in the Specifications and Plans. The bid price shall also include all appurtenant work necessary to provide a complete and functional fence system.

Bid Item C12 - Ornamental Pedestrian Gates-60" ht (at Garden):
The unit price bid for this item shall include full compensation for furnishing all labor, materials, tools, equipment, and incidentals; and for performing all work involved in furnishing and installing the pedestrian gate at Garden, including shop drawings, fabrication, purchase, delivery, gate frame, pickets, posts, footings, concrete, hinges, latch assemblies, locking devices, stops, fittings, hardware, surface preparation, factory and field-applied coatings, paint and finishes, and installation in accordance with the manufacturer's recommendations, complete in place at the locations shown on the Drawings, as specified in the Specifications and Plans. The bid price shall also include all appurtenant work necessary to provide a complete and functional gate system.

Bid Item C13 - Ornamental Vehicular Gates-60" ht (at Garden):
The unit price bid for this item shall include full compensation for furnishing all labor, materials, tools, equipment, and incidentals; and for performing all work involved in furnishing and installing the vehicular gate at Garden, including shop drawings, fabrication, purchase, delivery, gate frame, pickets, posts, footings, concrete, hinges, latch assemblies, locking devices, stops, fittings, hardware, surface preparation, factory and field-applied coatings, paint and finishes, and installation in accordance with the manufacturer's recommendations, complete in place at the locations shown on the Drawings, as specified in the Specifications and Plans. The bid price shall also include all appurtenant work necessary to provide a complete and functional gate system.

Bid Item C14 - 12" Concrete Mow Band
The linear foot price bid for this item shall include full compensation for furnishing all labor, materials, tools, equipment, and incidentals; and for performing all work involved in furnishing and installing the 12-inch-wide concrete mow band, including excavation, soil preparation, subgrade preparation, subgrade compaction, aggregate base where required, forming, reinforcement, concrete placement, concrete additives, sealers, finish treatment, curing, control and expansion joints, joint sealants, and all appurtenant work necessary to complete the installation in the locations indicated on the Drawings and beneath all fencing except where specifically excluded. The bid price shall also include all labor, equipment, materials, and other work required by the Drawings and Specifications that is not specifically identified as a separate pay item.

Bid Item C15 - 18" Concrete Mow Band under Ornamental Fence (at Watt Ave):
The linear foot price bid for this item shall include full compensation for furnishing all labor, materials, tools, equipment, and incidentals; and for performing all work involved in furnishing and installing the 18-inch-wide concrete mow band beneath fencing along Watt Ave, including excavation, soil preparation, subgrade preparation, subgrade compaction, aggregate base where required, forming, reinforcement, concrete placement, concrete additives, sealers, finish treatment, curing, control and expansion joints, joint sealants, and all appurtenant work necessary to complete the installation in the locations indicated on the Drawings and beneath all fencing except where specifically excluded. The bid price shall also include all labor, equipment, materials, and other work required by the Drawings and Specifications that is not specifically identified as a separate pay item.

Bid Item C16 - Parking Lot Striping:
The lump sum price bid for this item shall include full compensation for furnishing all labor, materials, tools, equipment, and incidentals; and for performing all work involved in furnishing and applying parking lot striping, including layout, field measurement, surface preparation, cleaning, traffic control, application of paint or striping

materials, markings, symbols, arrows, accessibility markings, and all other pavement markings indicated on the Drawings. The bid price shall include all labor, equipment, materials, and other work required by the Drawings and Specifications necessary to provide a complete and properly installed striping system.

Bid Item C17 - Concrete Wheel Stop:
The unit price bid for this item shall include full compensation for furnishing all labor, materials, tools, equipment, and incidentals; and for performing all work involved in furnishing and installing precast concrete wheel stops, including purchase, delivery, layout, placement, anchoring, concrete anchors, drilling, installation, alignment, and all appurtenant work necessary to provide complete and functional wheel stops at the locations indicated on the Drawings, as specified in the Specifications and Plans. The bid price shall also include all labor, equipment, materials, and other work required by the Drawings and Specifications that is not specifically identified as a separate pay item.

Bid Item C18 - Gravel Service Drive (at Garden):
The square foot price bid for this item shall include full compensation for furnishing all labor, materials, tools, equipment, and incidentals; and for performing all work involved in constructing the gravel service drive at Garden, including excavation, grading, subgrade preparation, subgrade compaction, geotextile fabric where specified, aggregate base or gravel surfacing material, placement, spreading, grading, watering, compaction, and final surface preparation, complete in place in the locations indicated on the Drawings, as specified in the Specifications and Plans. The bid price shall also include all labor, equipment, materials, and other work required by the Drawings and Specifications that is not specifically identified as a separate pay item.

Bid Item C19 - ADA Curb Ramp with truncated domes (CalTrans Case C):
The unit price bid for this item shall include full compensation for furnishing all labor, materials, tools, equipment, and incidentals; and for performing all work involved in constructing ADA curb ramp improvements (Caltrans Case C), including layout, excavation, subgrade preparation, subgrade compaction, aggregate base, forming, reinforcement where specified, concrete placement, finishing, curing, detectable warning surface with truncated domes, and all appurtenant work necessary to provide a complete and accessible curb ramp installation at the locations indicated on the Drawings, as specified in the Specifications and Plans.

Bid Item C20 - Vertical Curb / Retaining wall:
The unit price bid for this item shall include full compensation for furnishing all labor, materials, tools, equipment, and incidentals; and for performing all work involved in constructing vertical retaining curb, including excavation, subgrade preparation, subgrade compaction, aggregate base, reinforcement, forming, concrete placement, finishing, curing, control and expansion joints, joint sealants, backfill, and all appurtenant work necessary to complete the installation at the locations shown on the Drawings, as specified in the Specifications and Plans.

Bid Item C21 - Culvert Feature (Culvert, Concrete Walls, Fill, Concrete Pavement):
The linear foot price bid for this item shall include full compensation for furnishing all labor, materials, tools, equipment, and incidentals; and for performing all work involved in furnishing and constructing the concrete culvert system, including excavation, removal and disposal of unsuitable materials, subgrade preparation, soil preparation, compaction, furnishing and installation of culvert structure, cast-in-place concrete walls, headwalls, wingwalls, footings, reinforcing steel, concrete pavement, concrete curbs, transitions, joints, formwork, curing, backfill, structural fill, placement and compaction of fill materials, and all associated drainage improvements as indicated on the Drawings and specified in the Specifications.

Bid Item C22 - Prop 68 Signage:
The unit price bid for this item shall include full compensation for furnishing all labor, materials, tools, equipment, and incidentals; and for performing all work involved in furnishing and installing Proposition 68 project signage, including procurement, fabrication, freight, delivery, unloading, storage, sales tax, assembly,

installation, anchorage, mounting hardware, concrete footings and foundations where indicated, excavation, formwork, concrete placement, backfill, site restoration, and all appurtenant work necessary to provide complete and functional signage at the locations indicated on the Drawings and as specified in the Specifications and Plans. The bid shall include all costs associated with meeting applicable Proposition 68 signage requirements, including required logos, text, colors, graphics, and other content shown in the Drawings or required by the funding program.

Bid Item C23 - 6" Curb with Handrail:
The linear foot price bid for this item shall include full compensation for furnishing all labor, materials, tools, equipment, and incidentals necessary to construct a 6-inch vertical curb with handrail, complete and in place, including concrete curb, reinforcing steel, handrail, posts, brackets, anchors, footings, excavation, forming, concrete placement, finishing, curing, backfill, and surface restoration. The bid shall include all required hardware, connections, welding, shop finishes, protective coatings, and coordination with adjacent improvements, and all appurtenant work necessary to complete the installation in the locations indicated on the Drawings, as specified in the Specifications and Plans.

Bid Item C24 - 6" Vertical Curb:
The linear foot price bid for this item shall include full compensation for furnishing all labor, materials, tools, equipment, and incidentals; and for performing all work involved in furnishing and installing 6” vertical curbs per Drawings, including excavation, subgrade preparation and compaction, aggregate base, forming, reinforcement, concrete placement, finishing, curing, joints, joint sealants, and all appurtenant work necessary to complete the installation in the locations indicated on the Drawings, as specified in the Specifications and Plans.

Bid Item C25 - Flow-Thru Curb:
The linear foot price bid for this item shall include full compensation for furnishing all labor, materials, tools, equipment, and incidentals; and for performing all work involved in furnishing and installing flow-thru curbs per Drawings, including excavation, subgrade preparation and compaction, aggregate base, forming, reinforcement, concrete placement, finishing, curing, joints, joint sealants, and all appurtenant work necessary to complete the installation in the locations indicated on the Drawings, as specified in the Specifications and Plans.

D – FURNISHINGS / EQUIPMENT / STRUCTURES

Bid Item D1 - Bench - Backed - Outdoor Creations:
The unit price bid for this item shall include full compensation for furnishing all labor, materials, tools, equipment, and incidentals; and for performing all work involved in furnishing and installing backed benches, including shop drawings, procurement, delivery, assembly, installation, anchorage, hardware, surface preparation, protective coatings and finishes, and all appurtenant work necessary to provide a complete and functional bench installation in the locations indicated on the Drawings, as specified in the Specifications and Plans.

Bid Item D2 - Bench - Backless - Outdoor Creations:
The unit price bid for this item shall include full compensation for furnishing all labor, materials, tools, equipment, and incidentals; and for performing all work involved in furnishing and installing backless benches, including shop drawings, procurement, delivery, assembly, installation, anchorage, hardware, surface preparation, protective coatings and finishes, and all appurtenant work necessary to provide a complete and functional bench installation in the locations indicated on the Drawings, as specified in the Specifications and Plans.

Bid Item D3 - Trash and Recycling Receptacles - BearSaver:
The unit price bid for this item shall include full compensation for furnishing all labor, materials, tools, equipment, and incidentals; and for performing all work involved in furnishing and installing trash and recycling receptacles, including shop drawings, procurement, delivery, assembly, installation, anchorage, hardware, surface preparation, protective coatings and finishes, and all appurtenant work necessary to provide a complete and

functional bench installation in the locations indicated on the Drawings, as specified in the Specifications and Plans.

Bid Item D4 - Picnic Table - (Accessible) - Outdoor Creations:
The unit price bid for this item shall include full compensation for furnishing all labor, materials, tools, equipment, and incidentals; and for performing all work involved in furnishing and installing accessible picnic tables, including shop drawings, procurement, delivery, assembly, installation, anchorage, hardware, surface preparation, protective coatings and finishes, and all appurtenant work necessary to provide a complete and functional bench installation in the locations indicated on the Drawings, as specified in the Specifications and Plans.

Bid Item D5 - Picnic Table - (Standard) - Outdoor Creations:
The unit price bid for this item shall include full compensation for furnishing all labor, materials, tools, equipment, and incidentals; and for performing all work involved in furnishing and installing standard picnic tables, including shop drawings, procurement, delivery, assembly, installation, anchorage, hardware, surface preparation, protective coatings and finishes, and all appurtenant work necessary to provide a complete and functional bench installation in the locations indicated on the Drawings, as specified in the Specifications and Plans.

Bid Item D6 - Round Picnic Table (Accessible):
The unit price bid for this item shall include full compensation for furnishing all labor, materials, tools, equipment, and incidentals; and for performing all work involved in furnishing and installing an accessible round picnic table, including shop drawings, procurement, delivery, assembly, installation, anchorage, hardware, surface preparation, protective coatings and finishes, and all appurtenant work necessary to provide a complete and functional bench installation in the locations indicated on the Drawings, as specified in the Specifications and Plans.

Bid Item D7 - Round Picnic Table:
The unit price bid for this item shall include full compensation for furnishing all labor, materials, tools, equipment, and incidentals; and for performing all work involved in furnishing and installing a round picnic table, including shop drawings, procurement, delivery, assembly, installation, anchorage, hardware, surface preparation, protective coatings and finishes, and all appurtenant work necessary to provide a complete and functional bench installation in the locations indicated on the Drawings, as specified in the Specifications and Plans.

Bid Item D8 - Park Sign - Outdoor Creations:
The unit price bid for this item shall include full compensation for furnishing all labor, materials, tools, equipment, and incidentals; and for performing all work involved in furnishing and installing the park sign, including shop drawings, procurement, delivery, excavation, soil preparation, subgrade preparation and compaction, concrete footing/foundation, reinforcement, anchorage, sign structure, lettering, graphics, coatings, paint and surface preparation, finishes, assembly, installation in accordance with the manufacturer's recommendations, and all appurtenant work necessary to provide a complete and functional sign installation in the locations indicated on the Drawings, as specified in the Specifications and Plans. The bid price shall also include all labor, equipment, materials, and other work required by the Drawings and Specifications that is not specifically identified as a separate pay item.

Bid Item D9 - Barbecue Grill - Single - Dumor:
The unit price bid for this item shall include full compensation for furnishing all labor, materials, tools, equipment, and incidentals; and for performing all work involved in furnishing and installing a single barbecue grill, including shop drawings, procurement, delivery, assembly, installation, anchorage, concrete footings or foundations where specified, hardware, surface preparation, protective coatings and finishes, and all appurtenant work necessary to provide a complete and functional bench installation in the locations indicated on the

Drawings, as specified in the Specifications and Plans.

Bid Item D10 - Barbecue Grill - Group - Dumor:
The unit price bid for this item shall include full compensation for furnishing all labor, materials, tools, equipment, and incidentals; and for performing all work involved in furnishing and installing a group barbecue grill, including shop drawings, procurement, delivery, assembly, installation, anchorage, concrete footings or foundations where specified, hardware, surface preparation, protective coatings and finishes, and all appurtenant work necessary to provide a complete and functional bench installation in the locations indicated on the Drawings, as specified in the Specifications and Plans.

Bid Item D11 - Bike Racks - Hoop - Dumor:
The unit price bid for this item shall include full compensation for furnishing all labor, materials, tools, equipment, and incidentals; and for performing all work involved in furnishing and installing bike racks, including shop drawings, procurement, delivery, assembly, installation, anchorage, hardware, surface preparation, protective coatings and finishes, and all appurtenant work necessary to provide a complete and functional bench installation in the locations indicated on the Drawings, as specified in the Specifications and Plans.

Bid Item D12 - Bike Lockers - Ground Control Systems:
The unit price bid for this item shall include full compensation for furnishing all labor, materials, tools, equipment, and incidentals; and for performing all work involved in furnishing and installing bike lockers, including shop drawings, procurement, delivery, assembly, installation, anchorage, hardware, surface preparation, protective coatings and finishes, and all appurtenant work necessary to provide a complete and functional bench installation in the locations indicated on the Drawings, as specified in the Specifications and Plans.

Bid Item D13 - Pet Waste Station:
The unit price bid for this item shall include full compensation for furnishing all labor, materials, tools, equipment, and incidentals; and for performing all work involved in furnishing and installing a dog waste station, including shop drawings, procurement, delivery, assembly, installation, anchorage, concrete footings or foundations where specified, hardware, surface preparation, protective coatings and finishes, and all appurtenant work necessary to provide a complete and functional bench installation in the locations indicated on the Drawings, as specified in the Specifications and Plans.

Bid Item D14 - Drinking Fountain w/Dog Bowl and Bottle Filler:
The unit price bid for this item shall include full compensation for furnishing all labor, materials, tools, equipment, and incidentals; and for performing all work involved in furnishing and installing the drinking fountain, including procurement, delivery, assembly, installation, plumbing connections, water supply connections, drainage connections, sump assembly, excavation, soil preparation, subgrade preparation and compaction, concrete pad or foundation, anchorage, testing, flushing, and all appurtenant work necessary to provide a complete and functional drinking fountain installation in the locations indicated on the Drawings, as specified in the Specifications and Plans. The bid price shall also include all labor, equipment, materials, and other work required by the Drawings and Specifications that is not specifically identified as a separate pay item.

Bid Item D15 - Removable Bollards - Dumor:
The unit price bid for this item shall include full compensation for furnishing all labor, materials, tools, equipment, and incidentals; and for performing all work involved in furnishing and installing removable bollards with sleeves, including procurement, delivery, excavation, soil preparation, subgrade preparation and compaction, concrete footing/foundation, reinforcing steel where specified, steel sleeve assembly, bollard, locking mechanism, hardware, surface preparation, coatings and finishes, installation in accordance with the manufacturer's recommendations, and all appurtenant work necessary to provide a complete and functional removable bollard system at the locations indicated on the Drawings, as specified in the Specifications and Plans. The bid price shall also include all labor, equipment, materials, and other work required by the Drawings and Specifications that is

not specifically identified as a separate pay item.

Bid Item D16 - Interpretive Signage:
The unit price bid for this item shall include full compensation for furnishing all labor, materials, tools, equipment, and incidentals; and for performing all work involved in furnishing and installing interpretive signs, including shop drawings, procurement, delivery, excavation, soil preparation, subgrade preparation and compaction, concrete footing/foundation, reinforcement and anchorage where specified, sign structure, posts, frame, interpretive panels, graphics, protective coatings, finishes, assembly, installation in accordance with the manufacturer's recommendations, and all appurtenant work necessary to provide a complete and functional interpretive sign installation at the locations indicated on the Drawings, as specified in the Specifications and Plans. The bid price shall also include all labor, equipment, materials, and other work required by the Drawings and Specifications that is not specifically identified as a separate pay item.

Bid Item D17 - ADA Parking Sign:
The unit price bid for this item shall include full compensation for furnishing all labor, materials, tools, equipment, and incidentals; and for performing all work involved in furnishing and installing ADA parking signs, including procurement, delivery, sign panel, lettering and graphics, sign post, mounting hardware, concrete footing/foundation, excavation, soil preparation, subgrade preparation and compaction, assembly, installation, and all appurtenant work necessary to provide a complete and functional ADA parking sign installation at the locations indicated on the Drawings, as specified in the Specifications and Plans. The bid price shall also include all labor, equipment, materials, and other work required by the Drawings and Specifications that is not specifically identified as a separate pay item.

E – PLAYGROUND AND FITNESS

Bid Item E1 - Play and Musical Equipment - Foundation Design (Deferred Submittal to the County), and Installation:
The lump sum price bid for this item shall include full compensation for furnishing all labor, materials, tools, equipment, and incidentals; and for performing all work involved in installing playground equipment, including manufacturer coordination, unloading, storage, assembly, anchorage, hardware, concrete footings/foundations design, excavation, formwork, concrete placement, site restoration, and all appurtenant work necessary to provide a complete and functional playground equipment system at the locations indicated on the Drawings and specified in the Specifications. The lump sum price shall also include all labor, equipment, materials, and other work required by the Drawings and Specifications that is not specifically identified as a separate pay item.

Bid Item E2 - P.I.P Safety Surfacing (at Playground ADA path & Fitness) with Aggregate Base:
The square foot price bid for this item shall include full compensation for furnishing all labor, materials, tools, equipment, and incidentals; and for performing all work involved in the procurement, delivery, and installation (per manufacturer’s recommendations) of rubberized surfacing for playground and fitness areas, including surface preparation, excavation as required, subgrade preparation and compaction, aggregate base, adhesives, forming, cushioning base layer, wear layer, sealants, edge restraints, transitions, and all appurtenant work necessary to provide a complete and functional rubberized surfacing system in the areas indicated on the Drawings and specified in the Specifications and Plans. The bid price shall also include all labor, equipment, materials, and other work required by the Drawings and Specifications that is not specifically identified as a separate pay item.

Bid Item E3 - P.I.P Safety Surfacing (at Playground hill) over Concrete Base:
The square foot price bid for this item shall include full compensation for furnishing all labor, materials, tools, equipment, and incidentals; and for performing all work involved in the procurement, delivery, and installation (per manufacturer’s recommendations) of rubberized surfacing for playground areas at playground hill, including concrete base, reinforcement, formwork, concrete placement, finishing, curing, surface preparation, cleaning, moisture testing, patching and leveling as required, primer, adhesives, forming, reinforcement, cushioning base

layer, wear layer, sealants, and all appurtenant work necessary to provide a complete and functional rubberized surfacing system in the areas indicated on the Drawings and specified in the Specifications and Plans. The bid price shall also include all labor, equipment, materials, and other work required by the Drawings and Specifications that is not specifically identified as a separate pay item.

Bid Item E4 - EWF Safety Surfacing (at Playground):
The square foot price bid for this item shall include full compensation for furnishing all labor, materials, tools, equipment, and incidentals; and for performing all work involved in the procurement, delivery, placement, and installation of engineered wood fiber (EWF) playground surfacing, including site preparation, excavation as required, subgrade preparation and compaction, geotextile fabric, drainage improvements, filter fabric, containment borders/edging, transition areas, playground safety surfacing material, placement, grading, leveling, compaction, and all appurtenant work necessary to provide a complete and functional playground surfacing system at the locations indicated on the Drawings and specified in the Specifications and Plans. The bid price shall also include all labor, equipment, materials, and other work required by the Drawings and Specifications that is not specifically identified as a separate pay item.

Bid Item E5 - Fitness Equipment incl. tax, freight and installation:
The lump sum price bid for this item shall include full compensation for furnishing all labor, materials, tools, equipment, and incidentals; and for performing all work involved in furnishing and installing fitness equipment, including procurement, manufacturer coordination, freight, delivery, unloading, storage, sales tax, assembly, installation, anchorage, hardware, concrete footings/foundations, excavation, formwork, concrete placement, site restoration, and all appurtenant work necessary to provide a complete and functional playground equipment system at the locations indicated on the Drawings and specified in the Specifications. The lump sum price shall also include all labor, equipment, materials, and other work required by the Drawings and Specifications that is not specifically identified as a separate pay item.

F – STRUCTURES

Bid Item F1 - Base Preparation for Pre-Fab Restroom Building and Utility Connections:
The lump sum bid for this item shall include full compensation for furnishing all labor, materials, tools, equipment, and incidentals; and for performing all work involved in base preparation and utility connections for a pre-fabricated restroom building (provided by the District), including building pad preparation, subgrade preparation and compaction, aggregate base, foundation/base support, anchorage, and all utility work required for a complete and operational facility. Utility work shall include all final utility connections. Building pad preparation, subgrade improvement, compaction requirements, and aggregate base installation shall be performed in accordance with the Geotechnical Report recommendations, manufacturer's instructions, Drawings, and Specifications. The lump sum price shall also include all labor, equipment, materials, testing, permits, and other work required by the Drawings and Specifications that is not specifically identified as a separate pay item.

Bid Item F2 – Pedestrian Bridge (including Tax and Freight), Abutment Foundation Design (Deferred Submittal to the County), and Installation:
The lump sum bid for this item shall include full compensation for furnishing all labor, materials, tools, equipment, and incidentals; and for performing all work involved in installing the pre-fabricated truss pedestrian bridge, including site preparation, delivery coordination, unloading, handling, assembly, placement, lifting, setting, anchorage, foundations, concrete footings/abutments, reinforcing steel, formwork, excavation, subgrade preparation and compaction, aggregate base, approach transitions, grading adjustments, protection of the creek, restoration of disturbed areas, and all appurtenant work necessary to provide a complete and functional pedestrian bridge installation. Engineered drawings to be submitted to the County for permitting, including approval from CDFW if required. Foundation design, subgrade preparation, and compaction requirements shall be performed in accordance with the Geotechnical Report recommendations, approved manufacturer's instructions, Drawings, and Specifications. The lump sum price shall also include all labor, equipment, materials, testing, and other work

required by the Drawings and Specifications that is not specifically identified as a separate pay item.

Bid Item F3 - Shade Structures including Installation:
The lump sum bid for this item shall include full compensation for furnishing all labor, materials, tools, equipment, and incidentals; and for performing all work involved in furnishing and installing (per manufacturer's recommendations) complete pre-fabricated metal shade structures, including structural steel/aluminum framing, columns, roof panels, metal shade components, hardware, connections, protective coatings/finishes, shop drawings, engineering, foundations, footings, excavation, subgrade preparation and compaction, concrete placement, reinforcing steel, anchorage, and all appurtenant work necessary to provide a complete and functional shade structure installation at the locations indicated on the Drawings and specified in the Specifications and Plans. Foundation and subgrade preparation shall be performed in accordance with the Geotechnical Report recommendations, approved manufacturer's instructions, Drawings, and Specifications. The lump sum price shall also include all labor, equipment, materials, testing, and other work required by the Drawings and Specifications that is not specifically identified as a separate pay item.

Bid Item F4 - Pilaster (at Ornamental Fence):
The unit price bid for this item shall include full compensation for furnishing all labor, materials, tools, equipment, and incidentals; and for performing all work involved in constructing cast-in-place concrete pilasters, including excavation, soil preparation, subgrade preparation and compaction, concrete footing/foundation, reinforcement, forming, concrete placement, concrete additives, finishing, curing, sealers, embedded items, sleeves, anchor bolts, fence attachment hardware, inserts, connections required for adjacent fencing, backfill, cleanup, and all appurtenant work necessary to provide complete pilaster installations at the locations indicated on the Drawings, as specified in the Specifications and Plans. The bid price shall also include all labor, equipment, materials, and other work required by the Drawings and Specifications that is not specifically identified as a separate pay item.

G – ELECTRICAL POWER, LIGHTING, EV

Bid Item G1 - Electrical service 400A, 120/208V, 3phase, 4 wire w/transformer pad:
The lump sum price bid for this item shall include full compensation for furnishing all labor, materials, tools, equipment, permits, fees, and incidentals; and for performing all work involved in providing a 400-ampere, 120/208-volt, 3-phase, 4-wire electrical service to the park, including coordination with the serving utility, service equipment, transformer, transformer pad, concrete, reinforcement, grounding and bonding, conduits, conductors, pull boxes, disconnects, connections, excavation, trenching, bedding, backfill, compaction, testing, inspection, surface restoration, and all appurtenant work necessary to provide a complete and operational electrical service, as shown on the Drawings and specified in the Specifications and Plans.

Bid Item G2 - Service to Building:
The lump sum price bid for this item shall include full compensation for furnishing all labor, materials, tools, equipment, and incidentals; and for performing all work involved in providing electrical service to the restroom building, including coordination with the serving utility, excavation, trenching, shoring as required, subgrade preparation, conduit, conductors, pull boxes, service equipment, disconnects, transformers as required, grounding and bonding, connections to the restroom building electrical system, testing, backfill, compaction, surface restoration, and all appurtenant work necessary to provide complete and operational electrical service to the restroom building at the locations shown on the Drawings, as specified in the Specifications and Plans.

Bid Item G3 - Service to Amphitheater:
The lump sum price bid for this item shall include full compensation for furnishing all labor, materials, tools, equipment, permits, fees, and incidentals; and for performing all work involved in providing electrical service to the amphitheater, including coordination with the serving utility, service equipment, transformers as required, transformer pad, concrete, reinforcement, grounding and bonding, conduits, conductors, pull boxes, disconnects,

connections to the amphitheater electrical system, excavation, trenching, bedding, backfill, compaction, testing, inspection, surface restoration, and all appurtenant work necessary to provide a complete and operational electrical service to the amphitheater, as shown on the Drawings and specified in the Specifications and Plans.

Bid Item G4 - Service to Gardens:
The lump sum price bid for this item shall include full compensation for furnishing all labor, materials, tools, equipment, permits, fees, and incidentals; and for performing all work involved in providing electrical service to the gardens, including coordination with the serving utility, service equipment, transformers as required, transformer pad, concrete, reinforcement, grounding and bonding, conduits, conductors, pull boxes, disconnects, connections to the garden electrical system, excavation, trenching, bedding, backfill, compaction, testing, inspection, surface restoration, and all appurtenant work necessary to provide a complete and operational electrical service to the garden, as shown on the Drawings and specified in the Specifications and Plans.

Bid Item G5 - Parking Lot Lighting:
The unit price bid for this item shall include full compensation for furnishing all labor, materials, tools, equipment, and incidentals; and for performing all work involved in furnishing and installing parking lot lighting, including light pole, luminaire, foundation, concrete, reinforcement, anchor bolts, conduits, conductors, pull boxes, junction boxes, disconnects, grounding and bonding, controls, photocells, excavation, trenching, bedding, backfill, compaction, testing, adjustment, and all appurtenant work necessary to provide a complete and operational parking lot lighting fixture at the locations shown on the Drawings, as specified in the Specifications and Plans.

Bid Item G6 - Pathway lighting:
The unit price bid for this item shall include full compensation for furnishing all labor, materials, tools, equipment, and incidentals; and for performing all work involved in furnishing and installing pathway lighting, including light pole, luminaire, foundation, concrete, reinforcement, anchor bolts, conduits, conductors, pull boxes, junction boxes, disconnects, grounding and bonding, controls, photocells, excavation, trenching, bedding, backfill, compaction, testing, adjustment, and all appurtenant work necessary to provide a complete and operational parking lot lighting fixture at the locations shown on the Drawings, as specified in the Specifications and Plans.

Bid Item G7 - EV Charging stations:
The unit price bid for this item shall include full compensation for furnishing all labor, materials, tools, equipment, permits, fees, and incidentals; and for performing all work involved in furnishing and installing electric vehicle charging stations, including EV charging equipment, mounting hardware, equipment pads, bollards or protective barriers where shown, electrical conduits, conductors, disconnects, circuit breakers, grounding and bonding, communication wiring as required, excavation, trenching, bedding, backfill, compaction, testing, commissioning, labeling, and all appurtenant work necessary to provide complete and operational electric vehicle charging stations at the locations shown on the Drawings, as specified in the Specifications and Plans.

Bid Item G8 - EV infrastructure for future:
The lump sum bid for this item shall include full compensation for furnishing all labor, materials, tools, equipment, and incidentals, and for performing all work necessary to provide electric vehicle (EV) charging infrastructure for future use at the parking lot in accordance with applicable CALGreen requirements, including excavation and trenching, subgrade preparation, installation of underground electrical conduit, pull boxes, junction boxes, sweeps, fittings, warning tape, electrical service and panel provisions, circuit pathways, stub-outs, conductors where indicated, concrete encasement where required, restoration of pavement and other surfaces, identification and labeling of EV charging spaces and electrical infrastructure, and all connections and appurtenant work necessary to provide a complete and functional EV charging infrastructure system at the locations shown on the Drawings and as specified in the Plans and Specifications. EV charging stations, chargers, and associated charging equipment are not included unless specifically indicated on the Drawings.

H – PLANTING

Bid Item H1 - Soil Preparation including amendments:
The square foot price bid for this item shall include full compensation for furnishing all labor, materials, tools, equipment, and incidentals; and for performing all work involved in soil preparation and amendment, including soil testing, furnishing and incorporating fertilizers, compost, organic matter, gypsum, soil conditioners, and other amendments as recommended by the soil laboratory and specified in the Contract Documents, as well as tilling, cultivation, blending, moisture conditioning, fine grading, and all appurtenant work necessary to prepare planting areas in the locations indicated on the Drawings, as specified in the Specifications and Plans.

Bid Item H2 - Sod Turf Lawn:
The square foot price bid for this item shall include full compensation for furnishing all labor, materials, tools, equipment, and incidentals; and for performing all work involved in furnishing and installing sod turf, including final soil preparation, fine grading, furnishing and installing sod, rolling, watering, establishment, and all appurtenant work necessary to provide a complete and healthy turf installation in the locations indicated on the Drawings, as specified in the Specifications and Plans.

Bid Item H3 - Hydroseed Meadow Mix:
The square foot price bid for this item shall include full compensation for furnishing all labor, materials, tools, equipment, and incidentals; and for performing all work involved in furnishing and applying hydroseed meadow mix, including seed, fiber mulch, tackifier, fertilizer where specified, mixing, application, watering, erosion control measures associated with the hydroseed application, establishment, and all appurtenant work necessary to provide a complete and healthy vegetative cover in the locations indicated on the Drawings, as specified in the Specifications and Plans.

Bid Item H4 - Trees - 15 Gal from SacTree:
The unit price bid for this item shall include full compensation for furnishing all labor, materials, tools, equipment, and incidentals; and for performing all work involved in furnishing and installing 15-gallon trees, including procurement, delivery, excavation, planting, backfill, staking, guying, tree ties, watering, mulch, pruning, cleanup, establishment, and all appurtenant work necessary to provide complete and healthy tree installations at the locations indicated on the Drawings, as specified in the Specifications and Plans. The bid price shall also include all labor, equipment, materials, and other work required by the Drawings and Specifications that is not specifically identified as a separate pay item.

Bid Item H5 - Specimen Trees - 36" Box:
The unit price bid for this item shall include full compensation for furnishing all labor, materials, tools, equipment, and incidentals; and for performing all work involved in furnishing and installing 36-inch box specimen trees, including procurement, delivery, unloading, handling, excavation, planting, backfill, watering basin, staking, guying, tree ties, temporary bracing, crane services, watering, mulch, pruning, cleanup, establishment, and all appurtenant work necessary to provide complete and healthy tree installations at the locations indicated on the Drawings, as specified in the Specifications and Plans. The bid price shall also include all labor, equipment, materials, and other work required by the Drawings and Specifications that is not specifically identified as a separate pay item.

Bid Item H6 - Root barriers:
The unit price bid for this item shall include full compensation for furnishing all labor, materials, tools, equipment, and incidentals; and for performing all work involved in furnishing and installing root barriers, including procurement, delivery, excavation, trenching, preparation of trench surfaces, furnishing and installation of root barrier panels, connectors, joints, backfill, compaction, cleanup, and all appurtenant work necessary to provide a complete root barrier installation at the locations indicated on the Drawings, as specified in the

Specifications and Plans. The bid price shall also include all labor, equipment, materials, and other work required by the Drawings and Specifications that is not specifically identified as a separate pay item.

Bid Item H7 - Bark Mulch in Native Areas (at Existing Trees):
The square foot price bid for this item shall include full compensation for furnishing all labor, materials, tools, equipment, and incidentals; and for performing all work involved in furnishing and installing bark mulch in native planting areas, including procurement, delivery, placement, spreading, grading, and maintenance of mulch to the depth indicated on the Drawings, as specified in the Specifications and Plans. The bid price shall also include all labor, equipment, materials, and other work required by the Drawings and Specifications necessary to provide complete mulch installation in native areas.

Bid Item H8 - Bark Mulch in New Planting Areas:
The square foot price bid for this item shall include full compensation for furnishing all labor, materials, tools, equipment, and incidentals; and for performing all work involved in furnishing and installing bark mulch in new planting areas, including procurement, delivery, placement, spreading, grading, and maintenance of mulch to the depth indicated on the Drawings, as specified in the Specifications and Plans. The bid price shall also include all labor, equipment, materials, and other work required by the Drawings and Specifications necessary to provide complete mulch installation in new planting areas.

Bid Item H9 – Shrubs - 1 gal:
The unit price bid for this item shall include full compensation for furnishing all labor, materials, tools, equipment, and incidentals; and for performing all work involved in furnishing and installing 1-gallon shrubs, including procurement, delivery, handling, excavation, planting, backfill, pruning, watering, cleanup, establishment, and all appurtenant work necessary to provide complete and healthy shrub installations at the locations indicated on the Drawings, as specified in the Specifications and Plans. The bid price shall also include all labor, equipment, materials, and other work required by the Drawings and Specifications that is not specifically identified as a separate pay item.

Bid Item H10 – Shrubs - 5 gal:
The unit price bid for this item shall include full compensation for furnishing all labor, materials, tools, equipment, and incidentals; and for performing all work involved in furnishing and installing 5-gallon shrubs, including procurement, delivery, handling, excavation, planting, backfill, pruning, watering, cleanup, establishment, and all appurtenant work necessary to provide complete and healthy shrub installations at the locations indicated on the Drawings, as specified in the Specifications and Plans. The bid price shall also include all labor, equipment, materials, and other work required by the Drawings and Specifications that is not specifically identified as a separate pay item.

Bid Item H11 – Shrubs - 15 gal:
The unit price bid for this item shall include full compensation for furnishing all labor, materials, tools, equipment, and incidentals; and for performing all work involved in furnishing and installing 15-gallon shrubs, including procurement, delivery, handling, excavation, planting, backfill, pruning, watering, cleanup, establishment, and all appurtenant work necessary to provide complete and healthy shrub installations at the locations indicated on the Drawings, as specified in the Specifications and Plans. The bid price shall also include all labor, equipment, materials, and other work required by the Drawings and Specifications that is not specifically identified as a separate pay item.

I – IRRIGATION

Bid Item I1 - Irrigation system:
The square foot price bid for this item shall include full compensation for furnishing all labor, materials, tools, equipment, and incidentals; and for performing all work involved in furnishing and installing a complete and fully functioning irrigation system, including procurement, delivery, installation in accordance with the manufacturer's recommendations, layout, trenching, excavation, backfill, compaction, irrigation mainlines, lateral lines, pipe sleeves, drip irrigation, dripline, irrigation heads, nozzles, root watering systems, control wires, remote control valve assemblies, irrigation controller assembly, flow sensors, fittings, valve boxes, testing, flushing, adjustment, programming, and all other miscellaneous irrigation components shown on the Drawings and required for a complete operating system. The bid price shall also include all labor, equipment, materials, and other work required by the Drawings and Specifications that is not specifically identified as a separate pay item.

Bid Item I2 - Connection to existing water meter:
The unit price bid for this item shall include full compensation for furnishing all labor, materials, tools, equipment, and incidentals; and for performing all work involved in connecting the new irrigation system to the existing water meter, including field verification of existing conditions, excavation, trenching, removal and disposal of existing materials as required, fittings, adapters, valves, piping, backflow prevention components where specified, connections, appurtenances, testing, flushing, disinfection where required, and restoration of disturbed areas. The bid price shall also include all labor, equipment, materials, and other work required by the Drawings and Specifications necessary to provide a complete and operational connection to the existing water meter.

Bid Item I3 - Revisions to Existing Irrigation System:
The allowance amount for this item shall include full compensation for furnishing all labor, materials, tools, equipment, and incidentals; and for performing all work involved in maintaining the existing irrigation system in operation during construction and modifying the existing irrigation system as required to accommodate the proposed improvements. Work includes, but is not limited to, locating, protecting, adjusting, relocating, removing, replacing, reconnecting, extending, and modifying irrigation mainlines, lateral lines, pipe sleeves, irrigation heads, nozzles, root watering systems, control wires, remote control valve assemblies, irrigation controller assemblies, flow sensors, fittings, valve boxes, testing, flushing, adjustment, programming, and all other miscellaneous irrigation components required to restore the existing irrigation system to a complete and fully operational condition. The allowance amount shall also include all labor, equipment, materials, and other work required by the Drawings and Specifications that is necessary to complete the revisions to the existing irrigation system and that is not specifically identified as a separate pay item.

J – MISCELLANEOUS

Bid Item J1 - Maintenance (90 Day):
The square foot price bid for this item shall include full compensation for furnishing all labor, materials, tools, equipment, and incidentals; and for performing all work required during the 90-day maintenance period, including maintenance of all installed landscape improvements, irrigation system operation and adjustment, watering, weed control, pruning, replacement of dead or unhealthy plant material, pest and disease control, fertilization where specified, mulch maintenance, cleanup, mowing and turf maintenance where applicable, monitoring and adjustment of irrigation components, and all other work necessary to maintain the landscape improvements in a healthy and acceptable condition until final acceptance by the District, as specified in the Specifications and Plans. The bid price shall also include all labor, equipment, materials, and other work required by the Drawings and Specifications that is not specifically identified as a separate pay item.

Bid Item J2 - Mobilization/De-mobilization (NTE - 5%):

The lump sum price bid for this item shall include full compensation for furnishing all labor, materials, tools, equipment, and incidentals; and for performing all work involved in mobilization and de-mobilization, including preparation for beginning work, transportation of personnel, equipment, materials, and supplies to and from the project site, establishment of temporary facilities, field offices, storage areas, project signage, permits and coordination, bonds and insurance, pre-construction activities, startup operations, project closeout, removal of temporary facilities, cleanup, and all other work necessary to mobilize and demobilize for completion of the Work as specified in the Contract Documents.

Payment for this item shall not exceed five percent (5%) of the total contract bid amount unless otherwise approved by the District.

END OF SECTION

6.20 BID ITEM DESCRIPTIONS (OFF-SITE)

BID ITEM DESCRIPTIONS
The descriptions below are general descriptions and do not include estimated quantities. See plans and bid summary for estimated quantities. Estimated quantities are provided as a courtesy only. Actual numbers and quantities of symbols on plans prevail.

BID ITEM LIST – OFF-SITE WORK

A - SITE PREPARATION
Bid Item A1 – Mobilization:
The lump sum price bid for this item shall include full compensation for furnishing all labor, materials, tools, equipment, and incidentals; and for performing all work involved in mobilization and demobilization, including transportation of personnel, equipment, and materials to and from the project site, establishment and removal of temporary facilities, site setup, project signage, permits, bonds, insurance, and all other work necessary to mobilize for and demobilize from completion of the Work, as specified in the Specifications and Plans.

Bid Item A2 – Temporary Erosion Control / SWPPP Protection:
The acreage price bid for this item shall include full compensation for furnishing all labor, materials, tools, equipment, and incidentals; and for performing all work involved in providing, installing, maintaining, inspecting, repairing, replacing, and removing temporary erosion and sediment control measures required by the SWPPP and Contract Documents, including fiber rolls, inlet protection, sediment control measures, dust control, protection of stockpiles, and all appurtenant work necessary to protect the site and adjacent areas from erosion, sediment, and stormwater pollution throughout construction.

B – STREET WORK
Bid Item B1 – Sawcut Existing Pavement:
The linear foot price bid for this item shall include full compensation for furnishing all labor, materials, tools, equipment, and incidentals; and for performing all work involved in sawcutting existing pavement, including layout, sawcutting to the lines and depths indicated on the Drawings, removal of pavement as required for adjacent construction, protection of remaining pavement edges, cleanup, and all appurtenant work necessary to provide clean and straight pavement cuts in the locations indicated on the Drawings, as specified in the Specifications and Plans.

Bid Item B2 – Demo Existing Pavement / Median:
The square foot price bid for this item shall include full compensation for furnishing all labor, materials, tools, equipment, and incidentals; and for performing all work involved in demolition and removal of existing pavement and median improvements, including removal, loading, hauling, disposal, removal of associated curb and other appurtenant improvements as indicated on the Drawings, cleanup, and preparation of the area for new construction, as specified in the Specifications and Plans.

Bid Item B3 – Type 4 Median Curb:
The linear foot price bid for this item shall include full compensation for furnishing all labor, materials, tools, equipment, and incidentals; and for performing all work involved in furnishing and installing Type 4 median curb per County Standards, including excavation, subgrade preparation and compaction, aggregate base, forming, reinforcement, concrete placement, finishing, curing, joints, joint sealants, and all appurtenant work necessary to complete the installation in the locations indicated on the Drawings, as specified in the Specifications and Plans.

Bid Item B4 – AC/AB Pavement:

The square foot price bid for this item shall include full compensation for furnishing all labor, materials, tools, equipment, and incidentals; and for performing all work involved in furnishing and installing asphalt concrete (AC) pavement over aggregate base (AB), including subgrade preparation and compaction, aggregate base, asphalt concrete, tack coat, paving, compaction, finishing, and all appurtenant work necessary to complete the installation in the locations indicated on the Drawings, as specified in the Specifications and Plans.

Bid Item B5 – Concrete Pavement:
The square foot price bid for this item shall include full compensation for furnishing all labor, materials, tools, equipment, and incidentals; and for performing all work involved in furnishing and installing concrete sidewalk and concrete pad at bus stop per County Standards, including excavation, subgrade preparation and compaction, aggregate base, forming, reinforcement, concrete placement, finishing, curing, joints, joint sealants, and all appurtenant work necessary to complete the installation in the locations indicated on the Drawings, as specified in the Specifications and Plans.

Bid Item B6 – Type 1A Curb:
The linear foot price bid for this item shall include full compensation for furnishing all labor, materials, tools, equipment, and incidentals; and for performing all work involved in furnishing and installing Type 1A curb in accordance with the County Standard Details, including excavation, subgrade preparation and compaction, aggregate base, forming, reinforcement, concrete placement, finishing, curing, joints, joint sealants, and all appurtenant work necessary to complete the installation in the locations indicated on the Drawings, as specified in the Specifications and Plans.

Bid Item B7 – 45' Driveway:
The lump sum price bid for this item shall include full compensation for furnishing all labor, materials, tools, equipment, and incidentals; and for performing all work involved in furnishing and installing a 45-foot-wide driveway approach, including curb ramps on both sides, detectable warning surfaces, excavation, subgrade preparation and compaction, aggregate base, concrete pavement, forming, reinforcement, concrete placement, finishing, curing, joints, joint sealants, grading, and all appurtenant work necessary to complete the driveway approach and associated accessible improvements in the locations indicated on the Drawings, as specified in the Specifications and Plans.

Bid Item B8 - Signage:
The lump sum price bid for this item shall include full compensation for furnishing all labor, materials, tools, equipment, and incidentals; and for performing all work involved in the relocation of the existing bus stop sign, including coordination with the applicable transit agency, removal of the existing sign and support post, salvaging and protecting the existing sign and hardware for reuse where applicable, furnishing new posts, mounting hardware, concrete footings and foundations where indicated, excavation, formwork, concrete placement, backfill, site restoration, reinstallation, and adjustment of the sign to the required height and orientation. The bid shall include all costs associated with transporting, storing, and reinstalling the existing sign, as well as any new materials, hardware, or components required to provide a complete and functional bus stop sign at the new location indicated on the Drawings and as specified in the Specifications and Contract Documents.

C – TRAFFIC SIGNAL

Bid Item C1 - Traffic Signal Modification:
The contract lump sum price paid for Traffic Signal Modification - Watt Ave/Navaho Dr shall include, but is not limited to, full compensation for furnishing all labor, material, tools, equipment, incidentals, and for doing all work involved in potholing, traffic control, demolition of existing for improvements as necessary, foundations, conduits, conductors, pull boxes, signal standards and posts, controller assembly, emergency vehicle detectors, pedestrian and vehicular signal heads, audible pedestrian signal heads with countdown modules, APS pedestrian push buttons, mast arm signs, excavation and backfill, restoring sidewalk, pavement and appurtenances damaged or destroyed during construction, salvaging existing materials as specified in these Specifications and Plans. The

bid price shall also include all labor, equipment, materials, and other work required by the Drawings and Specifications that is not specifically identified as a separate pay item.

Bid Item C2 - Striping and Pavement Marking:
Striping, of the various types shown, shall be at the cost indicated in the bid items. The contract price paid in lump sum for Striping, of the various types shown in the bid schedule, shall include, but is not limited to, full compensation for furnishing all labor, material, tools, equipment, incidentals, and for doing all work involved in furnishing and placement of traffic lines and pavement markings, complete in place, and shall include establishing alignment and layout work as shown on the Contract Drawings, including as specified in the State Standard Specifications and Plans. The bid price shall also include all labor, equipment, materials, and other work required by the Drawings and Specifications that is not specifically identified as a separate pay item.

Bid Item C3 - Type H Marker:
Type H Marker, shall be at the cost indicated in the bid items. The contract price paid per each Type H marker, shall include, but is not limited to, full compensation for furnishing all labor, material, tools, equipment, incidentals, and for doing all work involved in furnishing and placement of Type H marker, complete in place, and shall include establishing alignment and layout work as shown on the Contract Drawings, including as specified in the County Standard Drawing 4-77. The bid price shall also include all labor, equipment, materials, and other work required by the Drawings and Specifications that is not specifically identified as a separate pay item.

D – PLANTING

Bid Item D1 - Soil Preparation including amendments:
The square foot price bid for this item shall include full compensation for furnishing all labor, materials, tools, equipment, and incidentals; and for performing all work involved in soil preparation and amendment, including soil testing, furnishing and incorporating fertilizers, compost, organic matter, gypsum, soil conditioners, and other amendments as recommended by the soil laboratory and specified in the Contract Documents, as well as tilling, cultivation, blending, moisture conditioning, fine grading, and all appurtenant work necessary to prepare planting areas in the locations indicated on the Drawings, as specified in the Specifications and Plans.

Bid Item D2 - Trees - 15 Gal from SacTree:
The unit price bid for this item shall include full compensation for furnishing all labor, materials, tools, equipment, and incidentals; and for performing all work involved in furnishing and installing 15-gallon trees, including procurement, delivery, excavation, planting, backfill, staking, guying, tree ties, watering, mulch, pruning, cleanup, establishment, and all appurtenant work necessary to provide complete and healthy tree installations at the locations indicated on the Drawings, as specified in the Specifications and Plans. The bid price shall also include all labor, equipment, materials, and other work required by the Drawings and Specifications that is not specifically identified as a separate pay item.

Bid Item D3 - Root barriers:
The unit price bid for this item shall include full compensation for furnishing all labor, materials, tools, equipment, and incidentals; and for performing all work involved in furnishing and installing root barriers, including procurement, delivery, excavation, trenching, preparation of trench surfaces, furnishing and installation of root barrier panels, connectors, joints, backfill, compaction, cleanup, and all appurtenant work necessary to provide a complete root barrier installation at the locations indicated on the Drawings, as specified in the Specifications and Plans. The bid price shall also include all labor, equipment, materials, and other work required by the Drawings and Specifications that is not specifically identified as a separate pay item.

Bid Item D4 - Bark Mulch in New Median:
The square foot price bid for this item shall include full compensation for furnishing all labor, materials, tools, equipment, and incidentals; and for performing all work involved in furnishing and installing bark mulch in new

planting areas, including procurement, delivery, placement, spreading, grading, and maintenance of mulch to the depth indicated on the Drawings, as specified in the Specifications and Plans. The bid price shall also include all labor, equipment, materials, and other work required by the Drawings and Specifications necessary to provide complete mulch installation in new planting areas.

Bid Item D5 – Shrubs - 1 gal:
The unit price bid for this item shall include full compensation for furnishing all labor, materials, tools, equipment, and incidentals; and for performing all work involved in furnishing and installing 1-gallon shrubs, including procurement, delivery, handling, excavation, planting, backfill, pruning, watering, cleanup, establishment, and all appurtenant work necessary to provide complete and healthy shrub installations at the locations indicated on the Drawings, as specified in the Specifications and Plans. The bid price shall also include all labor, equipment, materials, and other work required by the Drawings and Specifications that is not specifically identified as a separate pay item.

E – IRRIGATION
Bid Item E1 - Irrigation system:
The square foot price bid for this item shall include full compensation for furnishing all labor, materials, tools, equipment, and incidentals; and for performing all work involved in modifying and extending the existing irrigation system to serve the new median landscape improvements, including layout, trenching, excavation, backfill, compaction, irrigation piping, pipe sleeves, rotary spray heads, nozzles, remote control valve assemblies, control wires, fittings, valve boxes, connections to the existing irrigation system, testing, flushing, adjustment, programming, and all other miscellaneous irrigation components shown on the Drawings and required for a complete and fully functioning system. The bid price shall also include all labor, equipment, materials, and other work required by the Drawings and Specifications that is not specifically identified as a separate pay item.

F - MISCELLANEOUS
Bid Item F1 - Maintenance (90 Day):
The square foot price bid for this item shall include full compensation for furnishing all labor, materials, tools, equipment, and incidentals; and for performing all work required during the 90-day maintenance period, including maintenance of all installed landscape improvements, irrigation system operation and adjustment, watering, weed control, pruning, replacement of dead or unhealthy plant material, pest and disease control, fertilization where specified, mulch maintenance, cleanup, mowing and turf maintenance where applicable, monitoring and adjustment of irrigation components, and all other work necessary to maintain the landscape improvements in a healthy and acceptable condition until final acceptance by the District, as specified in the Specifications and Plans. The bid price shall also include all labor, equipment, materials, and other work required by the Drawings and Specifications that is not specifically identified as a separate pay item.

Bid Item F2 - Mobilization/De-mobilization (NTE - 5%):
The lump sum price bid for this item shall include full compensation for furnishing all labor, materials, tools, equipment, and incidentals; and for performing all work involved in mobilization and de-mobilization, including preparation for beginning work, transportation of personnel, equipment, materials, and supplies to and from the project site, establishment of temporary facilities, field offices, storage areas, project signage, permits and coordination, bonds and insurance, pre-construction activities, startup operations, project closeout, removal of temporary facilities, cleanup, and all other work necessary to mobilize and demobilize for completion of the Work as specified in the Contract Documents.

Payment for this item shall not exceed five percent (5%) of the total contract bid amount unless otherwise approved by the District.

END OF SECTION

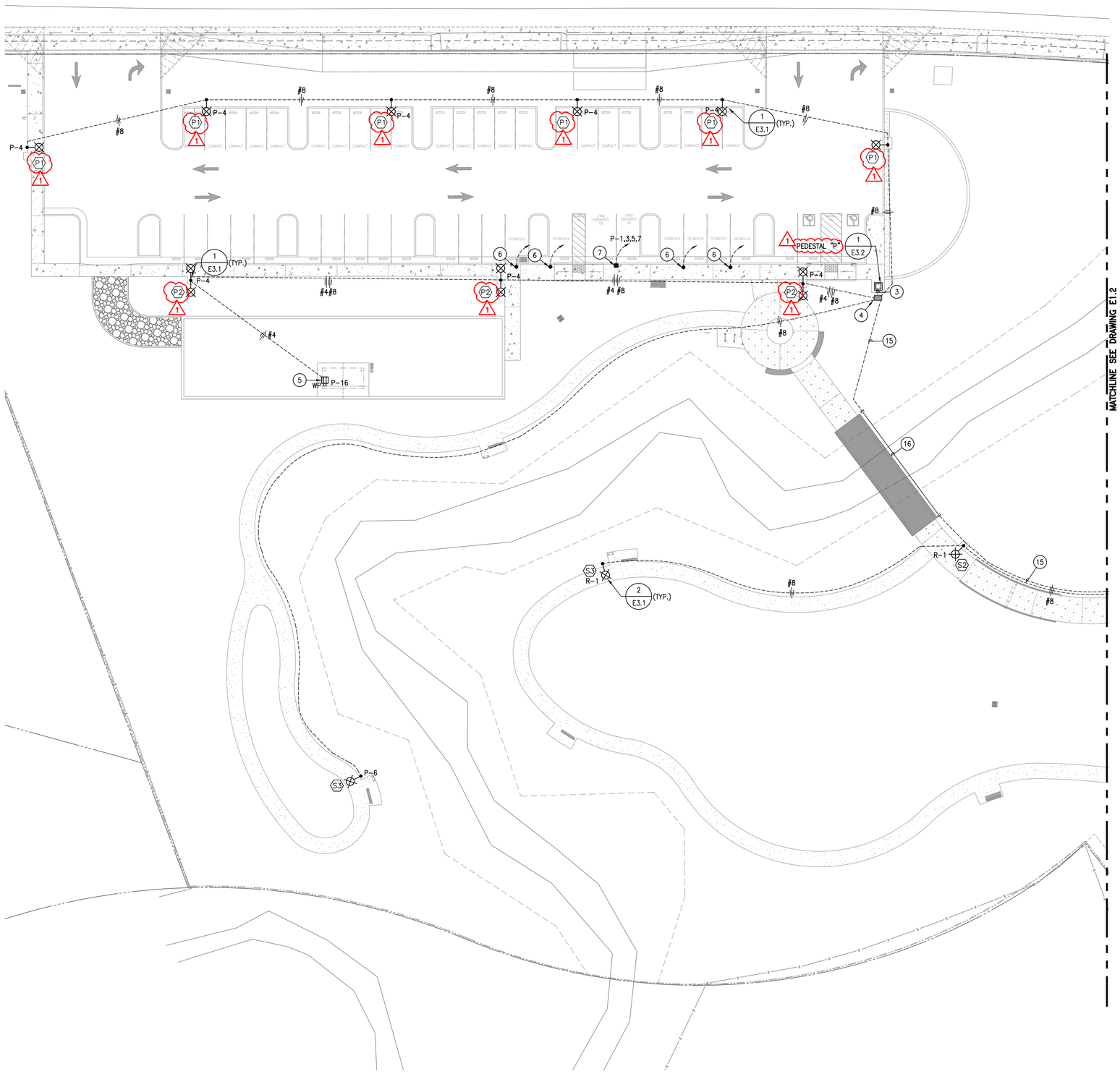

1 PARTIAL SITE PLAN ELECTRICAL
SCALE: 1"=20'-0"

PEZZONI ENGINEERING, INC.
CONSULTING ELECTRICAL ENGINEERS
1150 9TH Street Suite #1415 Modesto, CA 95354
PHONE: 209 . 554 . 4602
HTTP://WWW.PEZENGR.COM

PEZZONI ENGINEERING, INC. © Copyrighted 2026

(##) PLAN NOTES:

(NOTE: NOT ALL NOTE MAYBE USED ON SHEET) 1

1. (N) SMUD XFMER PAD W/BOLLARD PROTECTION PER SMUD REQMTS. –INSTALL (N) 4" C. PRIMARY PER SMUD DRAWINGS.
2. (N) 3"C. W/FEEDER PER SMUD REQMTS. FOR SECONDARY FEEDER.
3. (N) 1–3" & 5–2"C. PATHWAYS FROM PULLBOX INTO PEDESTAL.
4. (N) N36 POWER PULLBOX PER DETAIL 5/E4.1.
5. (N) GFCI RECEPTACLE COORDINATE EXACT LOCATION W/CITY –INSTALL W/1" RMC RISER INTO A FD BOX.
6. (N) 1 1/2" C.O. FOR (F) EV CHARGER –ROUTE TO (N) N36 PULLBOX (NOTE #4) –INSTALL CONDUIT STUB PER DETAIL 4/E4.1. 1
7. (N) DUAL 7.2KW –208V –1PH EV PEDESTAL CHARGER SEE DETAIL 3/E3.1 –INSTALL (N) 1 1/2"C. W/4 #6 THWN CU & #10 CU GND VIA PULLBOX (NOTE #4). 1
8. CONNECT (N) BLDG PANEL (100A –120/240V –1PH –3W) FURNISHED BY MFR. –INSTALL (5X) (N) 20A–1P BREAKERS WITHIN (E) SPACES –LABEL AS "LTG PATHWAYS NORTH ", "LTG PATHWAYS PLAZA ", "LTG PATHWAYS SOUTH ", "RECP AMP "& "RECP AMP". 1
9. (N) 1 1/2"C. W/BLDG FEEDER PER SINGLE LINE DIAGRAM.
10. COORDINATE ROUTING OF CONDUIT ALONG UNDERSIDE OF BRIDGE –TRANSITION TO RMC PRIOR TO PENETRATING THE ABATEMENT ON EITHER END.
11. (N) N36 POWER PULLBOX PER DETAIL 5/E4.1.
12. (N) 3–2"C. PATHWAYS FROM PULLBOX INTO BLDG. PANEL.
13. (N) GFCI RECEPTACLE COORDINATE ROUTING WITHIN SHADE. STRUCTURE COLUMN.
14. (N) IRRIGATION CONTROLLER LOCATION –COORD & ROUTE (N) CKT FROM PNL. "R".
15. (N) 4" C. W/PEDESTAL "P" FEEDER PER SINGLE LINE DIAGRAM.
16. TRANSITION TO RMC AT BRIDGE WERE EXPOSED. –ATTACHED TO LOWER CHORD W/BLINE B42 STRUT W/3/8" SQUARE U–BOLTS (SPEED TO HSS CHORD DIMENSIONS) – ROUTE SEMI??? CABLES UNDER DECK. 1

FIXTURE SCHEDULE

TAG	DESCRIPTION	MANUFACTURER / CATALOG NUMBER	LAMPS WATTS	VOLT.	MOUNTING	COMMENTS
S 2	PEDESTRIAN POLE LIGHT	GARDCO #PPT-196L-1150-NW-G2-T3-2-UNV -BL-IMRI3-BK POLE: #SRS-CB-3-11-12-T3D4L-N-BK-VPA	LED 51W 4,950LM	MVOLT	SUSPENDED	INTEGRAL SENSORS
S 3	PEDESTRIAN POLE LIGHT	GARDCO #PPT-196L-1150-NW-G2-T3-3-UNV -BL-IMRI3-BK POLE: #SRS-CB-3-11-12-T3D4L-N-BK-VPA	LED 51W 5,660LM	MVOLT	SURFACE ABOVE DOORWAY	INTEGRAL SENSORS
S 5	PEDESTRIAN POLE LIGHT	GARDCO #PPT-196L-1150-NW-G2-T3-5-UNV -BL-IMRI3-BK POLE: #SRS-CB-3-11-12-T3D4L-N-BK-VPA	LED 51W 5,450LM	MVOLT	SURFACE AT CANOPY	INTEGRAL SENSORS
P 1	POLE LIGHT SINGLE HEAD	GARDCO FIXTURE: #P20-C-A05-840-T4S-AR1-UNV-BL50 -L3-EHS-BK POLE: #SRS-CB-4-11-22-D1-DT5-BK-VPA	LED 90W 9,350lm	MVOLT	POLE @+24'-6"	INTEGRAL SENSORS
P 2	POLE LIGHT DOUBLE HEAD	GARDCO FIXTURE: (1x) #P20-C-A03-840-T4S-AR1-UNV-BL50 -L3-BK (TOWARDS PARK) (1x) #P20-C-A05-840-T4S-AR1-UNV-BL50 -L3-BK POLE: #SRS-CB-4-11-22-D2-DT5-BK-VPA	LED 52W 5,750lm 90W 9,350lm	MVOLT	POLE @+24'-6"	INTEGRAL SENSORS

1

811 Know what's below. Call before you dig.

Westwood
Westwood Professional Services, Inc.
6200 STONERIDGE MALL ROAD, SUITE 330
PLEASANTON, CA 94588
T: 925.223.8340
westwoodps.com

NO.	DESCRIPTION	DATE	BY	APP. DATE	APP.
1	BID ADDENDUM	9/22/26	CCB		

NHRPD SIERRA CREEK PARK
7781 WATT AVE, ANTELOPE
PARTIAL SITE PLAN ELECTRICAL

DATE: 08/14/2025
DRAFTER: CCM
DESIGNER: KLP
CHECKED: KLP
PROJECT NO.

REGISTERED PROFESSIONAL ENGINEER KEVIN L. PEZZONI NO. 16266 EXP: 12/26 ELECTRICAL STATE OF CALIFORNIA

E1.1

10/07/26 11:46:12 AM P:\22\860 ANTELOPE SIERRA CREEK PARK\ENGR\SHEETS\860_E1.0 SITE PLAN – ELECTRICAL.DWG cbarry

1 PARTIAL SITE PLAN ELECTRICAL

SCALE: 1"=20'-0"

SCALE IN FEET

0 10 20 40

PLAN NOTES:

(NOTE: NOT ALL NOTE MAYBE USED ON SHEET) 1

1. (N) SMUD XFMER PAD W/BOLLARD PROTECTION PER SMUD REQMTS. –INSTALL (N) 4" C. PRIMARY PER SMUD DRAWINGS.
2. (N) 3"C. W/FEEDER PER SMUD REQMTS. FOR SECONDARY FEEDER.
3. (N) 1–3" & 5–2"C. PATHWAYS FROM PULLBOX INTO PEDESTAL.
4. (N) N36 POWER PULLBOX PER DETAIL 5/E4.1.
5. (N) GFCI RECEPTACLE COORDINATE EXACT LOCATION W/CITY –INSTALL W/1" RMC RISER INTO A FD BOX.
6. 1 (N) 1 1/2" C.O. FOR (F) EV CHARGER –ROUTE TO (N) N36 PULLBOX (NOTE #4) – INSTALL CONDUIT STUB PER DETAIL 4/E4.1.
7. (N) DUAL 7.2KW –208V –1PH EV PEDESTAL CHARGER SEE DETAIL 3/E3.1 –INSTALL (N) 1 1/2"C. W/4 #6 THWN CU & #10 CU GND VIA PULLBOX (NOTE #4). 1
8. CONNECT (N) BLDG PANEL (100A –120/240V –1PH –3W) FURNISHED BY MFR. –INSTALL (5X) (N) 20A–1P BREAKERS WITHIN (E) SPACES –LABEL AS "LTG PATHWAYS NORTH ", "LTG PATHWAYS PLAZA ", "LTG PATHWAYS SOUTH ", "RECP AMP "& "RECP AMP".
9. 1 (N) 1 1/2"C. W/BLDG FEEDER PER SINGLE LINE DIAGRAM.
10. COORDINATE ROUTING OF CONDUIT ALONG UNDERSIDE OF BRIDGE –TRANSITION TO RMC PRIOR TO PENETRATING THE ABATEMENT ON EITHER END.
11. (N) N36 POWER PULLBOX PER DETAIL 5/E4.1.
12. (N) 3–2"C. PATHWAYS FROM PULLBOX INTO BLDG. PANEL.
13. (N) GFCI RECEPTACLE COORDINATE ROUTING WITHIN SHADE. STRUCTURE COLUMN.
14. (N) IRRIGATION CONTROLLER LOCATION –COORD & ROUTE (N) CKT FROM PNL. "R".
15. (N) 4" C. W/PEDESTAL "P" FEEDER PER SINGLE LINE DIAGRAM.
16. TRANSITION TO RMC AT BRIDGE WERE EXPOSED. –ATTACHED TO LOWER CHORD W/BLINE B42 STRUT W/3/8" SQUARE U–BOLTS (SPEED TO HSS CHORD DIMENSIONS) – ROUTE SEMI??? CABLES UNDER DECK. 1

Know what's **below.**
Call before you dig.

PEZZONI ENGINEERING, INC.
CONSULTING ELECTRICAL ENGINEERS
1150 9TH Street Suite #1415 Modesto, CA 95354
PHONE: 209 . 554 . 4602
HTTP://WWW.PEZENGR.COM

PEZZONI ENGINEERING, INC. © Copyrighted 2026

Westwood
Westwood Professional Services, Inc.
8200 STONERIDGE MALL ROAD, SUITE 330
PLEASANTON, CA 94588
T: 925.223.8340
westwoodps.com

NO.	DESCRIPTION	DATE	BY	APP. DATE	APP.
1	BID ADDENDUM	9/22/26	CCB		

NHRPD SIERRA CREEK PARK

7781 WATT AVE, ANTELOPE
PARTIAL SITE PLAN ELECTRICAL

DATE: 08/14/2025
DRAFTER: CCM
DESIGNER: KLP
CHECKED: KLP
PROJECT NO.

REGISTERED PROFESSIONAL ENGINEER
KEVIN L. PEZZONI
NO. 16261
EXP. 12/26
ELECTRICAL
STATE OF CALIFORNIA

E1.2

10/07/26 11:46:18 AM P:\22\860 ANTELOPE SIERRA CREEK PARK\ENGR\SHEETS\860_E1.0 SITE PLAN – ELECTRICAL.DWG cbarry

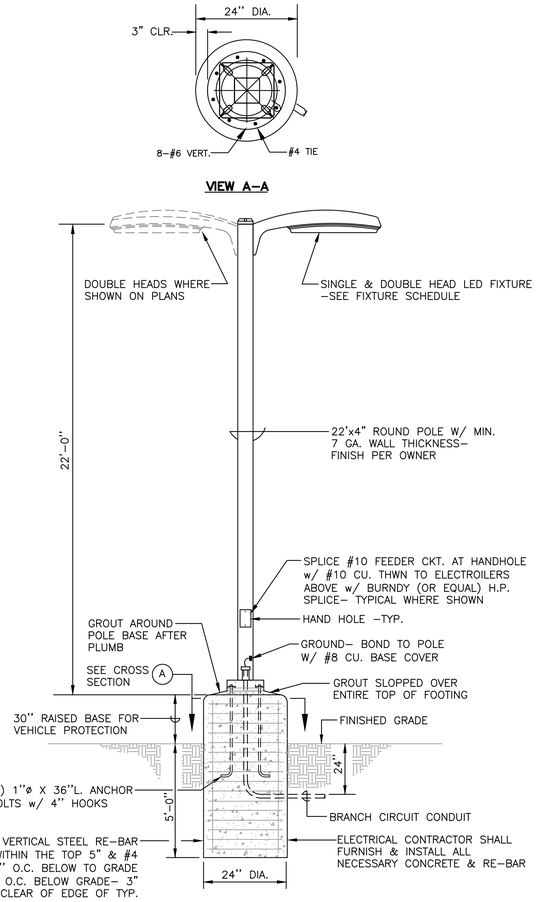

1 (N) LIGHT STANDARD FIXTURE TYPE "P"

SCALE: NTS

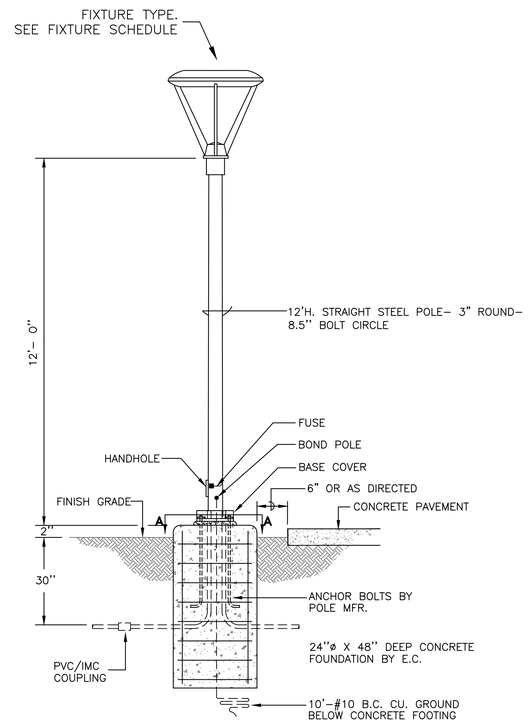

2 (N) LIGHT STANDARD FIXTURE TYPE "S"

SCALE: NTS

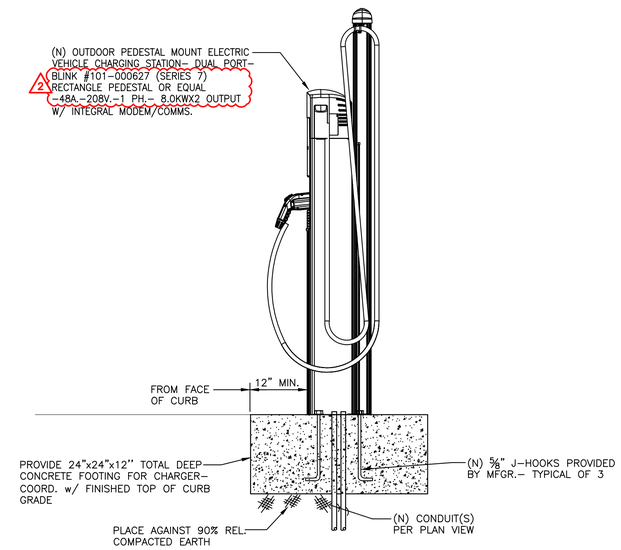

SIDE SECTION

3 ELECTRIC VEHICLE CHARGING STATION

SCALE: NTS

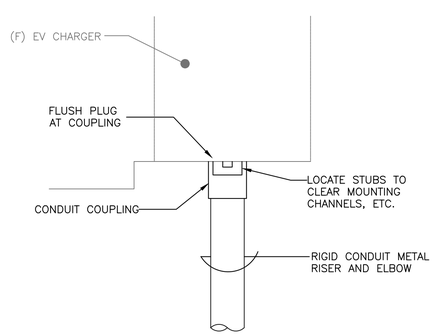

4 STUB AT FUTURE EV CHARGER

SCALE: NTS

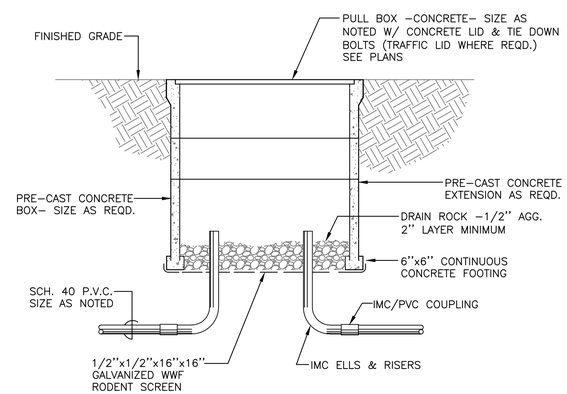

5 PULLBOX (TYP.)

SCALE: NTS

PEZZONI ENGINEERING, INC.
CONSULTING ELECTRICAL ENGINEERS
1150 9TH Street Suite #1415 Modesto, CA 95354
PHONE: 209 . 554 . 4602
HTTP://WWW.PEZENGR.COM

PEZZONI ENGINEERING, INC. © Copyrighted 2026

Westwood
Westwood Professional Services, Inc.
6200 STONERIDGE MALL ROAD, SUITE 330
PLEASANTON, CA 94588
T: 925.223.8340
westwoodps.com

NO.	DESCRIPTION	DATE	BY	APP. DATE	APP.
1	BID ADDENDUM	9/22/26	CCB		

NHRPD SIERRA CREEK PARK

7781 WATT AVE, ANTELOPE

DETAILS

DATE: 08/14/2025
DRAFTER: CCM
DESIGNER: KLP
CHECKED: KLP
PROJECT NO.

REGISTERED PROFESSIONAL ENGINEER KEVIN L. PEZZONI NO. 16267 EXP. 12/26 ELECTRICAL STATE OF CALIFORNIA

E3.1

Know what's below. Call before you dig.

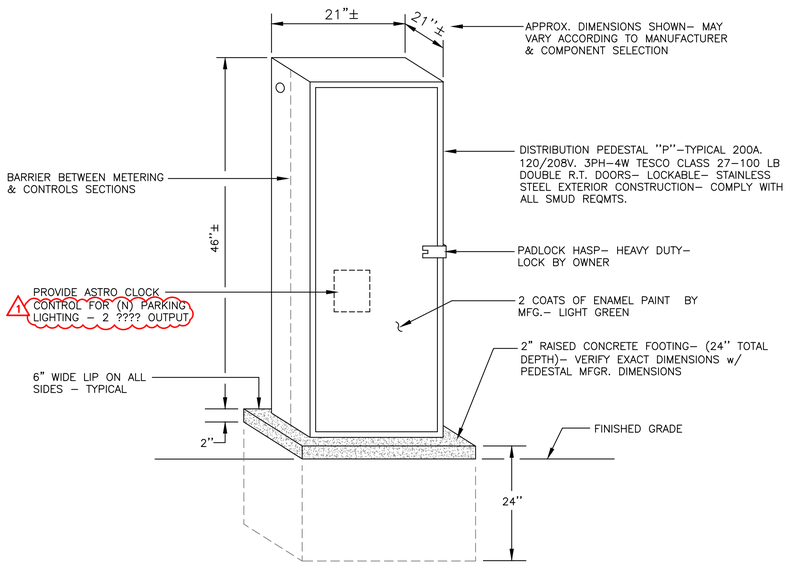

1 (N) SERVICE PEDESTAL " P"

SCALE: NTS

PEDESTAL SCHEDULE

PANEL: P — TESCO 27-100 PEDESTAL

BUS RATING: 200 A. — PHASE: 3%%C — SCCR: 22k

VOLTAGE: 120/208 V. — WIRE: 4 — BUSSING: Cu

CKT	DESCRIPTION	BRKR	TYPE	LOAD	A (va)	B (va)	C (va)	LOAD	TYPE	BRKR	DESCRIPTION	CKT
1	EV CHARGER #1	40/2	N	4000	4180			180	R	20/1	PEDESTAL RECP	2
3		/	N	4000		4000			L	20/1	LTG -PARKING LOT	4
5	EV CHARGER #2	40/2	N	4000			4000		L	20/1	LTG -PATHWAY	6
7		/	N	4000	4000							8
9	(F) EV CHARGER #3	40/2	N	4000		4000						10
11		/	N	4000			8000	4000	N	40/2	(F) EV CHARGER #8	12
13	(F) EV CHARGER #4	40/2	N	4000	8000			4000	N	/		14
15		/	N	4000		4180		180	R	20/1	RECP -COMM GARDEN	16
17	(F) EV CHARGER #5	40/2	N	4000			4000			20/1	SPARE	18
19		/	N	4000	4000					20/1	SPARE	20
21	(F) EV CHARGER #6	40/2	N	4000		4000				20/1	SPARE	22
23		/	N	4000			4000			20/1	SPARE	24
25	(F) EV CHARGER #7	40/2	N	4000	4000					20/1	SPARE	26
27		/	N	4000		4000				20/1	SPARE	28
					24180	20180	20000					

CONTINUOUS (C):	0 VA
NON-CONTINUOUS (N):	64000 VA
RECEP. (R):	360 VA
MOTOR (M) OR (M1):	0 VA
LIGHTING (L):	0 VA
KITCHEN >1750W (K):	0 VA

MCB: YES

MLO: -

MAX. PHASE @125% = **251.9 A.**

DEMAND TOTAL = **64.4 kVA**

= **178.6 A.**

DEMAND CALC. PER ART 220

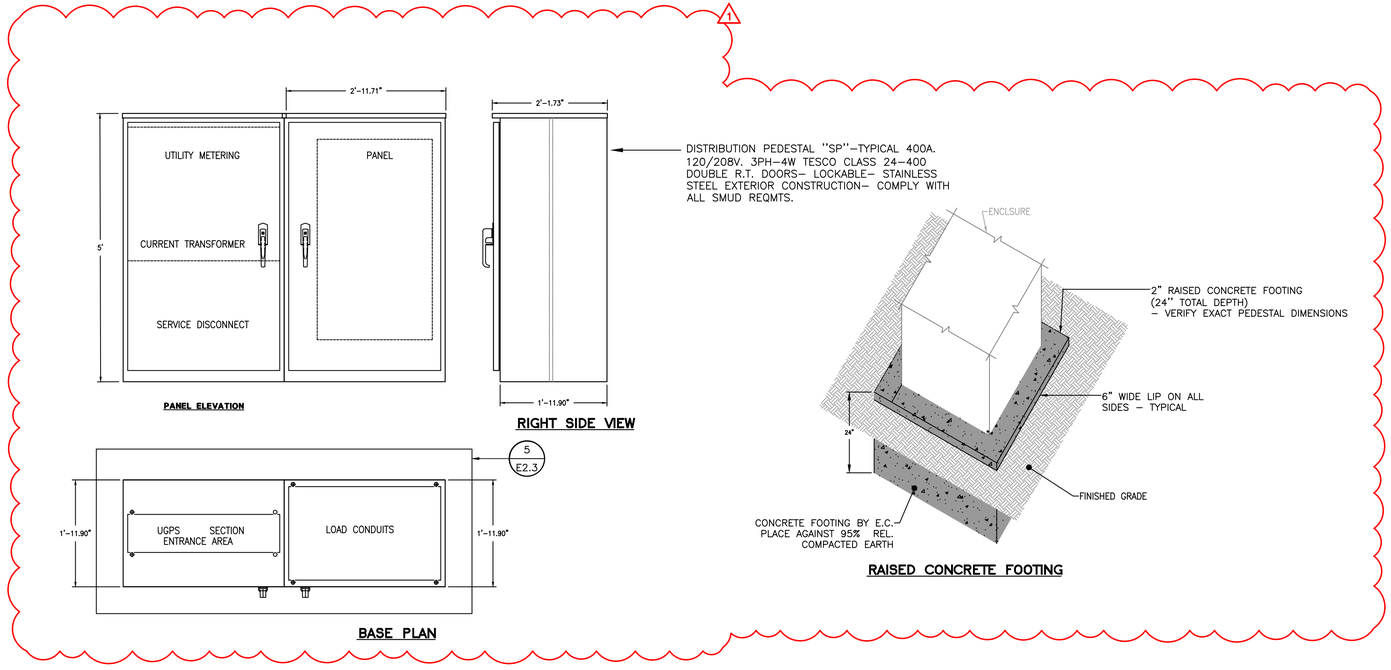

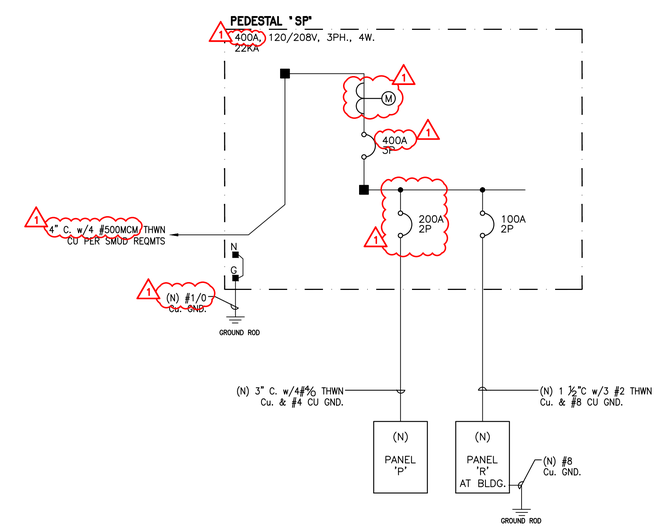

2 (N) SERVICE PEDESTAL " SP"

SCALE: NTS

PEZZONI ENGINEERING, INC.
CONSULTING ELECTRICAL ENGINEERS
1150 9TH Street Suite #1415 Modesto, CA 95354
PHONE: 209 . 554 . 4602
HTTP://WWW.PEZENGR.COM

PEZZONI ENGINEERING, INC. © Copyrighted 2026

Westwood
Westwood Professional Services, Inc.
6200 STONERIDGE MALL ROAD, SUITE 330
PLEASANTON, CA 94588
T: 925.223.8340
westwoodps.com

NO.	DESCRIPTION	DATE	BY	APP. DATE	APP.
1	BID ADDENDUM	9/22/26	CCB		

NHRPD SIERRA CREEK PARK

7781 WATT AVE, ANTELOPE

PEDESTAL DETAIL, PANEL SCHEDULE AND SINGLE LINE DIA.

DATE: 08/14/2025

DRAFTER: CCM

DESIGNER: KLP

CHECKED: KLP

PROJECT NO.

REGISTERED PROFESSIONAL ENGINEER — KEVIN L. PEZZONI — NO. 16284 — EXP. 12/26 — ELECTRICAL — STATE OF CALIFORNIA

E3.2

Know what's below. Call before you dig.

APPENDIX C

PUBLIC RESTROOM COMPANY

Building Better Places To Go.℠

December 15, 2025

Karen Folsom
O'Dell Engineering
A Westwood Company
6200 Stoneridge Mall Road, Suite 330
Pleasanton, CA 94588

Subject: Subgrade Recommendations – Preliminary Reference Information

Dear Karen Folsom,

Please find enclosed the preliminary subgrade recommendations, which include typical subgrade drawings intended for reference purposes only. These recommendations represent standard practices commonly followed by PRC; however, they must be independently verified for applicability to your specific project site.

It is essential that all proposed subgrade conditions be reviewed and approved by the appropriate local Authority Having Jurisdiction (AHJ) and evaluated by a licensed geotechnical or foundation engineer to confirm suitability for local soil conditions. PRC assumes no liability for any use of these typical drawings by the Owner, General Contractor, or other parties without such professional verification.

Please note the following important conditions:

- The included dimensions and details are preliminary and subject to change. Final design coordination will occur only upon PRC's receipt of a formal written Notice to Proceed, along with all applicable signed and approved architectural submittals from the required reviewing authorities.
- All utility stub-ups must be located between 4 to 6 feet from the building footprint.

We kindly request that you review the enclosed recommendations and acknowledge receipt. Should your current or proposed plans differ from these recommendations, please provide a copy of your plans in your response. PRC will be pleased to assist in coordinating subgrade requirements with our field installation team to help ensure a smooth construction process.

We appreciate your prompt attention to this matter and look forward to your reply.

Mike Meglen – Project Coordinator
For – Steve Myler – Regional Sales Manager
Phone: (888) 888-2060
Fax: (888) 888-1448
meglen@publicrestroomcompany.com
stevem@publicrestroomcompany.com

OWNER / GENERAL CONTRACTOR AND PUBLIC RESTROOM COMPANY RESPONSIBILITIES

PUBLIC RESTROOM COMPANY RESPONSIBILITIES:

1. PROVIDE FULL ARCHITECTURAL PLANS AND ENGINEERING CALCULATIONS, STAMPED BY STATE GOVERNING AGENCY SUITABLE FOR GENERAL CONTRACTOR TO FILE FOR REQUIRED BUILDING PERMIT.
2. FURNISH AND INSTALL UNDERGROUND UTILITIES UNDER SLAB (INCLUDING TRENCHING) EXTENDING 6 FEET MAX. BEYOND THE BUILDING LINE, MIN. OF 24" - MAX OF 36" BELOW GRADE.
3. FURNISH AND INSTALL SLAB TO FOUNDATION ANCHORS PER DETAILS INCLUDED HEREIN. APPLICABLE ONLY TO BUILDINGS WITH FOUNDATIONS.

GENERAL NOTES:

1. THE DIFFERENCE IN THE ELEVATION BETWEEN THE FINISH FLOOR OF THE BUILDING AT EXTERIOR DOORS AND THE SIDEWALK OUTSIDE IS 1/4" MAX. PRC RECOMMENDS SIDEWALK TO BE FLUSH WITH FINISH FLOOR AT ALL DOORS.
2. THE PLAN & DETAILS HEREIN ARE SPECIFIC TO THE BUILDING SIZE AND MODULE CONFIGURATION OF THIS BUILDING MODEL.

OWNER / GENERAL CONTRACTOR RESPONSIBILITIES:

1. PREPARE BUILDING PAD AND OR FOUNDATION.
2. PROVIDE SITE PLAN & ENGINEERED FOUNDATION PLAN (IF APPLICABLE) AND ATTACH IT TO THE PUBLIC RESTROOM COMPANY'S DEPARTMENT OF HOUSING APPROVED DOCUMENTS AND OBTAIN NECESSARY PERMITS FROM LOCAL JURISDICTION.
3. VERIFY AND SCHEDULE NECESSARY INSPECTIONS WITH LOCAL JURISDICTION FOR SITE PERFORMED WORK BY OTHERS, AND FOR UNDER BUILDING SLAB PLUMBING CONNECTIONS MADE BY PRC.
4. COORDINATE SEWER INVERT ELEVATION WITH THE PUBLIC RESTROOM COMPANY PRIOR TO BUILDING INSTALLATION, VERIFY & COORDINATE LOCATION OF EXISTING UTILITIES INCLUDING WATER METER SIZE, TYPE, AND LOCATION OF EXISTING UTILITIES COMING INTO THE BUILDING SUPPLIED BY PRC
5. MAKE FINAL UTILITY CONNECTIONS (INCLUDING NECESSARY UTILITY BOXES).
6. PREPARE SITE FOR MINIMUM ALLOWABLE SOIL BEARING PRESSURE OF 1,500 psf, WITH SUB-GRADE COMPACTED TO 90% M.D.D.
7. SUPPLY AND STOCK PILE REQUIRED QUANTITY OF COARSE MASON SAND WITHIN BUILDING PROXIMITY FOR USE BY PRC FOR UTILITY TRENCH BACKFILL.
8. PROJECTS WITH FOOTINGS: PROVIDE SLEEVES IN FOOTINGS ACCORDING TO UTILITY LOCATION PLAN AND PAD / FOUNDATION PLAN DIRECTION.

GENERAL SITE CONDITION LIABILITY NOTE:

PUBLIC RESTROOM COMPANY (PRC) PROVIDES BUILDING PAD / FOUNDATION PLAN DRAWINGS FOR PLACEMENT OF OUR BUILDING ON SITE FOUNDATIONS / PADS FOR **REFERENCE ONLY**. PRC DRAWINGS DO NOT INCORPORATE SITE DESIGN FOR LOCAL CODES, SOILS CONDITIONS, FOOTING REQUIREMENTS, AND / OR ANY OTHER CONTRIBUTING SITE FACTORS UP TO AND INCLUDING HIGH WATER TABLES. IT IS THE RESPONSIBILITY OF THE OWNER / GENERAL CONTRACTOR TO PROVIDE A PROPER SITE DESIGN TO ACCOMMODATE THE BUILDING AS WELL AS PROVIDE PROPER SITE CRITERIA SO PRC MAY MODEL SEWER, WATER, AND ELECTRICAL DESIGNS WITHIN THE BUILDING. OUR BUILDING DESIGN INCLUDES AN 8" THICK REINFORCED CONCRETE SLAB AND ASSUMES FULL SLAB BEARING ON SOILS WITH A MINIMUM OF 1500 PSF BEARING CAPACITY. OUR BUILDING DESIGNS SURCHARGE THE SOIL BENEATH THE MAT SLAB AT APPROXIMATE 208 PSF. ANY BUILDING FOUNDATION IN ADDITION TO THE INTEGRAL MAT SLAB ARE SHOWN FOR **REFERENCE ONLY** AND SHOULD BE VERIFIED BY A LICENSED SOILS ENGINEER TO CONFORM WITH REQUIRED CODES. **PRC ASSUMES NO LIABILITY FOR THE OWNER OR GENERAL CONTRACTOR ACCEPTANCE OF THESE TYPICAL DRAWINGS WITHOUT VERIFICATION BY A LICENSED SOILS / FOUNDATION ENGINEER.**

PUBLIC RESTROOM COMPANY
Building Better Places To Go.
Ph: 888-888-2060 | Fax: 888-888-1448

COPYRIGHT 2025, PUBLIC RESTROOM COMPANY THIS MATERIAL IS THE EXCLUSIVE PROPERTY OF PUBLIC RESTROOM COMPANY AND SHALL NOT BE REPRODUCED, USED, OR DISCLOSED TO OTHERS EXCEPT AS AUTHORIZED BY THE WRITTEN PERMISSION OF PUBLIC RESTROOM COMPANY.

BUILDING TYPE:	**RESTROOM / STORAGE BUILDING**	DATE: 05/20/2025	DRAWN BY:
		PROJECT #: 11307B	JAG
PROJECT:	**SIERRA CREEK PARK** **NORTH HIGHLANDS PARKS & REC DISTRICT, CA**	SHEET: 1 OF 5	**FD-1**

~NOT FOR CONSTRUCTION ~ PRELIMINARY DESIGN DRAWING ONLY ~ DO NOT SCALE, DIMENSIONS PRESIDE

NOTES:

1. **BOTTOM OF PRE-FAB BLDG. MANUFACTURERS SLAB IS DEAD FLAT. TOP OF FOOTINGS & COMPACTED BACK FILL MUST BE DEAD LEVEL. POUR FOOTING WITH LASER TRANSIT TO VERIFY TOP OF FOOTING. IF SHIM PLATES ARE REQUIRED A CHANGE ORDER IS REQUIRED.**
2. **REQUIRED ALLOWABLE SOIL BEARING PRESSURE = 1500 PSF; FIELD VERIFIED BY OTHERS**

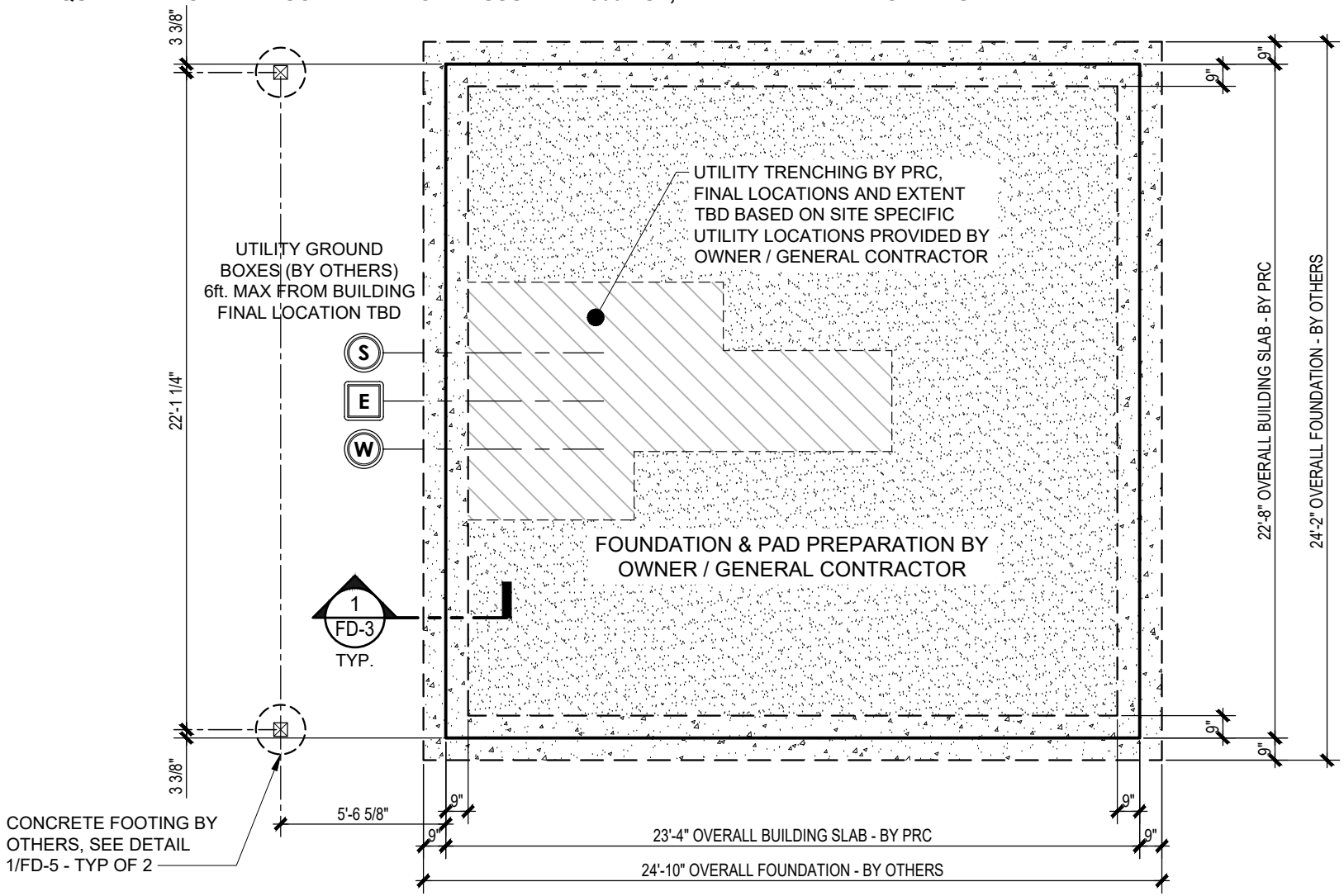

1 / FD-2

FOUNDATION / PAD PREPARATION PLAN

SCALE: NOT TO SCALE

PRELIMINARY FOR REFERENCE ONLY

PUBLIC RESTROOM COMPANY
Building Better Places To Go.
Ph: 888-888-2060 | Fax: 888-888-1448

COPYRIGHT 2025, PUBLIC RESTROOM COMPANY THIS MATERIAL IS THE EXCLUSIVE PROPERTY OF PUBLIC RESTROOM COMPANY AND SHALL NOT BE REPRODUCED, USED, OR DISCLOSED TO OTHERS EXCEPT AS AUTHORIZED BY THE WRITTEN PERMISSION OF PUBLIC RESTROOM COMPANY.

BUILDING TYPE:	**RESTROOM / STORAGE BUILDING**	DATE: 05/20/2025	DRAWN BY:
		PROJECT #: 11307B	JAG
PROJECT:	**SIERRA CREEK PARK** **NORTH HIGHLANDS PARKS & REC DISTRICT, CA**	SHEET: **FD-2** 2 OF 5	

~NOT FOR CONSTRUCTION ~ PRELIMINARY DESIGN DRAWING ONLY ~ DO NOT SCALE, DIMENSIONS PRESIDE

NOTES:

1. **BOTTOM OF PRE-FAB BLDG. MANUFACTURERS SLAB IS DEAD FLAT. TOP OF FOOTINGS & COMPACTED BACK FILL MUST BE DEAD LEVEL. POUR FOOTING WITH LASER TRANSIT TO VERIFY TOP OF FOOTING. IF SHIM PLATES ARE REQUIRED A CHANGE ORDER IS REQUIRED.**

2. **REQUIRED ALLOWABLE SOIL BEARING PRESSURE = 1500 PSF; FIELD VERIFIED BY OTHERS**

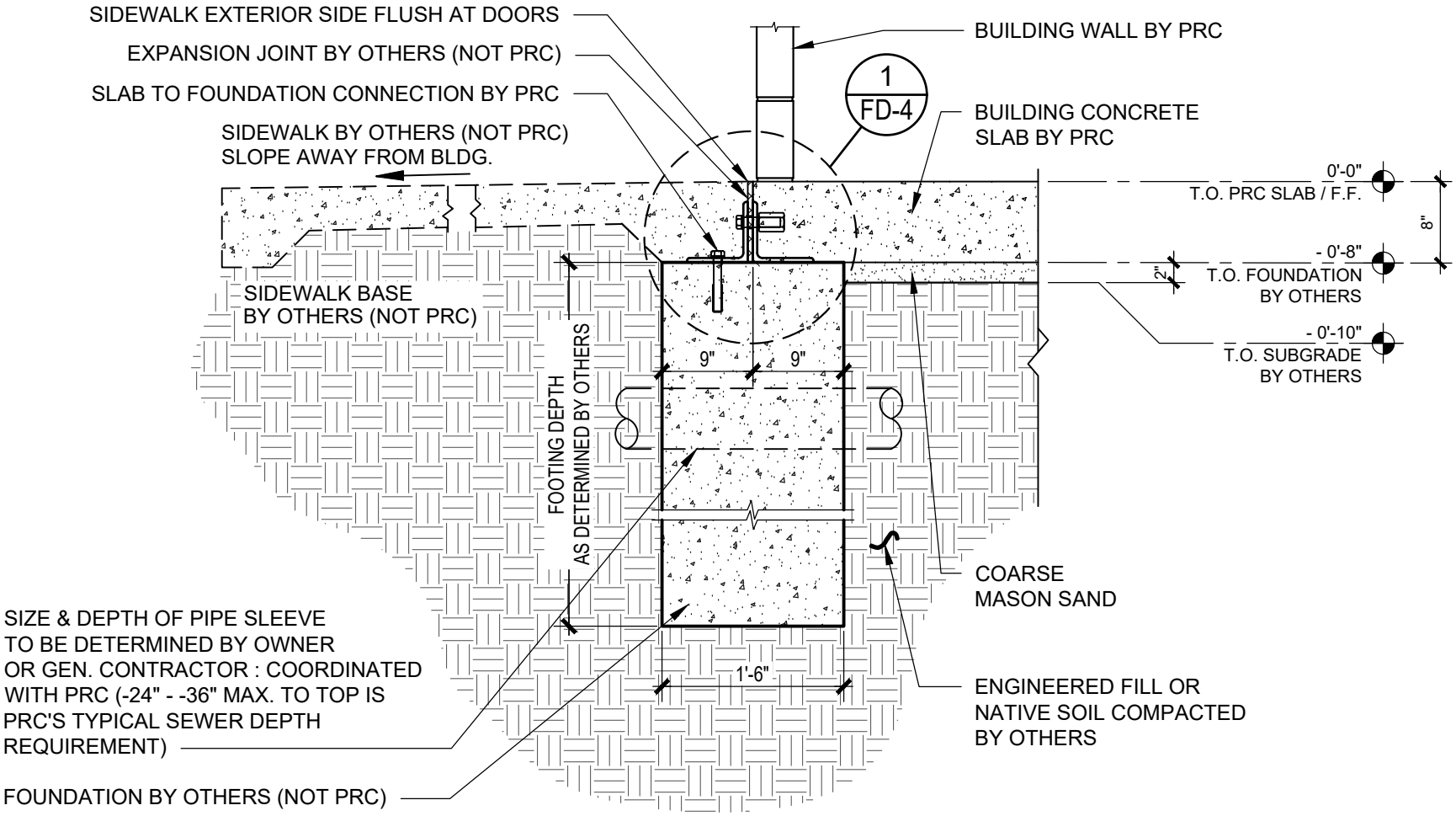

1
FD-3

TYPICAL FOUNDATION SECTION DETAIL

SCALE: NOT TO SCALE

PUBLIC RESTROOM COMPANY
Building Better Places To Go.
Ph: 888-888-2060 | Fax: 888-888-1448

COPYRIGHT 2025, PUBLIC RESTROOM COMPANY THIS MATERIAL IS THE EXCLUSIVE PROPERTY OF PUBLIC RESTROOM COMPANY AND SHALL NOT BE REPRODUCED, USED, OR DISCLOSED TO OTHERS EXCEPT AS AUTHORIZED BY THE WRITTEN PERMISSION OF PUBLIC RESTROOM COMPANY.

BUILDING TYPE:	**RESTROOM / STORAGE BUILDING**	DATE: 05/20/2025	DRAWN BY:
		PROJECT #: 11307B	JAG
PROJECT:	**SIERRA CREEK PARK** **NORTH HIGHLANDS PARKS & REC DISTRICT, CA**	SHEET:	**FD-3**
		3 OF 5	

~NOT FOR CONSTRUCTION ~ PRELIMINARY DESIGN DRAWING ONLY ~ DO NOT SCALE, DIMENSIONS PRESIDE

NOTE:
QUANTITY AND LOCATIONS OF ANCHORS TO BE DETERMINED BY PRC ENGINEER

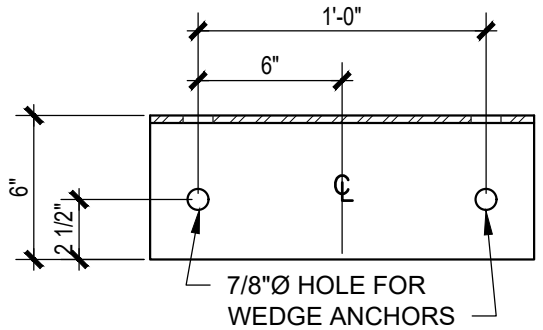

TOP VIEW

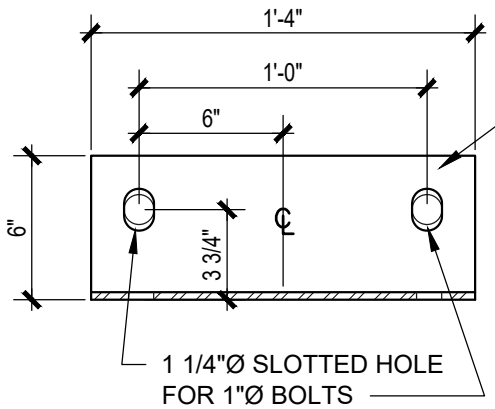

FRONT VIEW

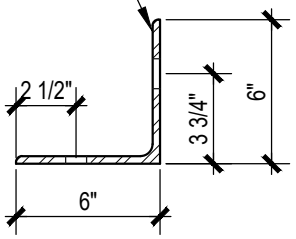

SIDE VIEW

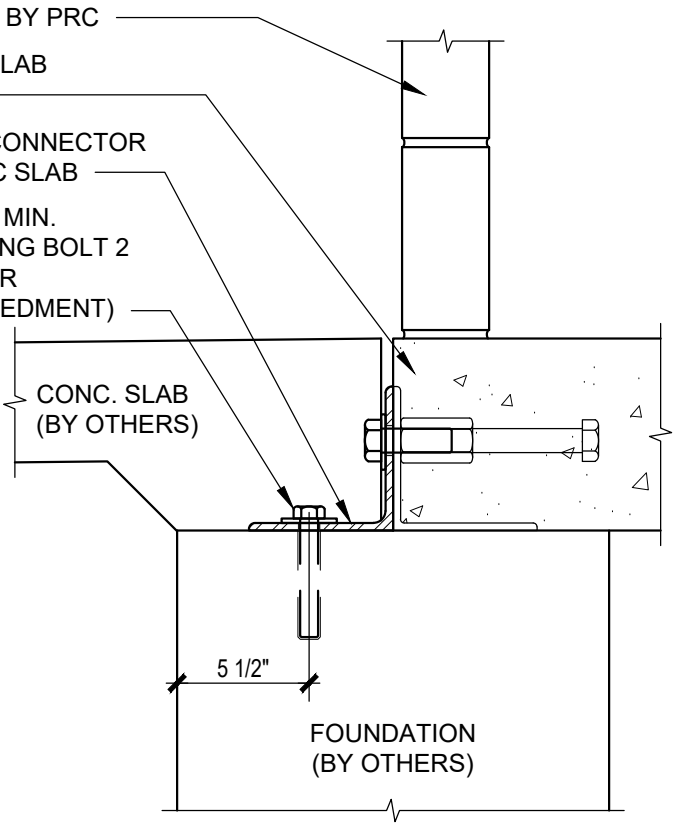

1
FD-4

SLAB TO FOUNDATION ANCHOR DETAIL (BY PRC)

SCALE: NOT TO SCALE

PUBLIC RESTROOM COMPANY
Building Better Places To Go.
Ph: 888-888-2060 | Fax: 888-888-1448

COPYRIGHT 2025, PUBLIC RESTROOM COMPANY THIS MATERIAL IS THE EXCLUSIVE PROPERTY OF PUBLIC RESTROOM COMPANY AND SHALL NOT BE REPRODUCED, USED, OR DISCLOSED TO OTHERS EXCEPT AS AUTHORIZED BY THE WRITTEN PERMISSION OF PUBLIC RESTROOM COMPANY.

BUILDING TYPE: **RESTROOM / STORAGE BUILDING**

PROJECT: **SIERRA CREEK PARK**
NORTH HIGHLANDS PARKS & REC DISTRICT, CA

DATE: 05/20/2025
PROJECT #: 11307B
DRAWN BY: JAG

SHEET: **FD-4**
4 OF 5

~NOT FOR CONSTRUCTION ~ PRELIMINARY DESIGN DRAWING ONLY ~ DO NOT SCALE, DIMENSIONS PRESIDE

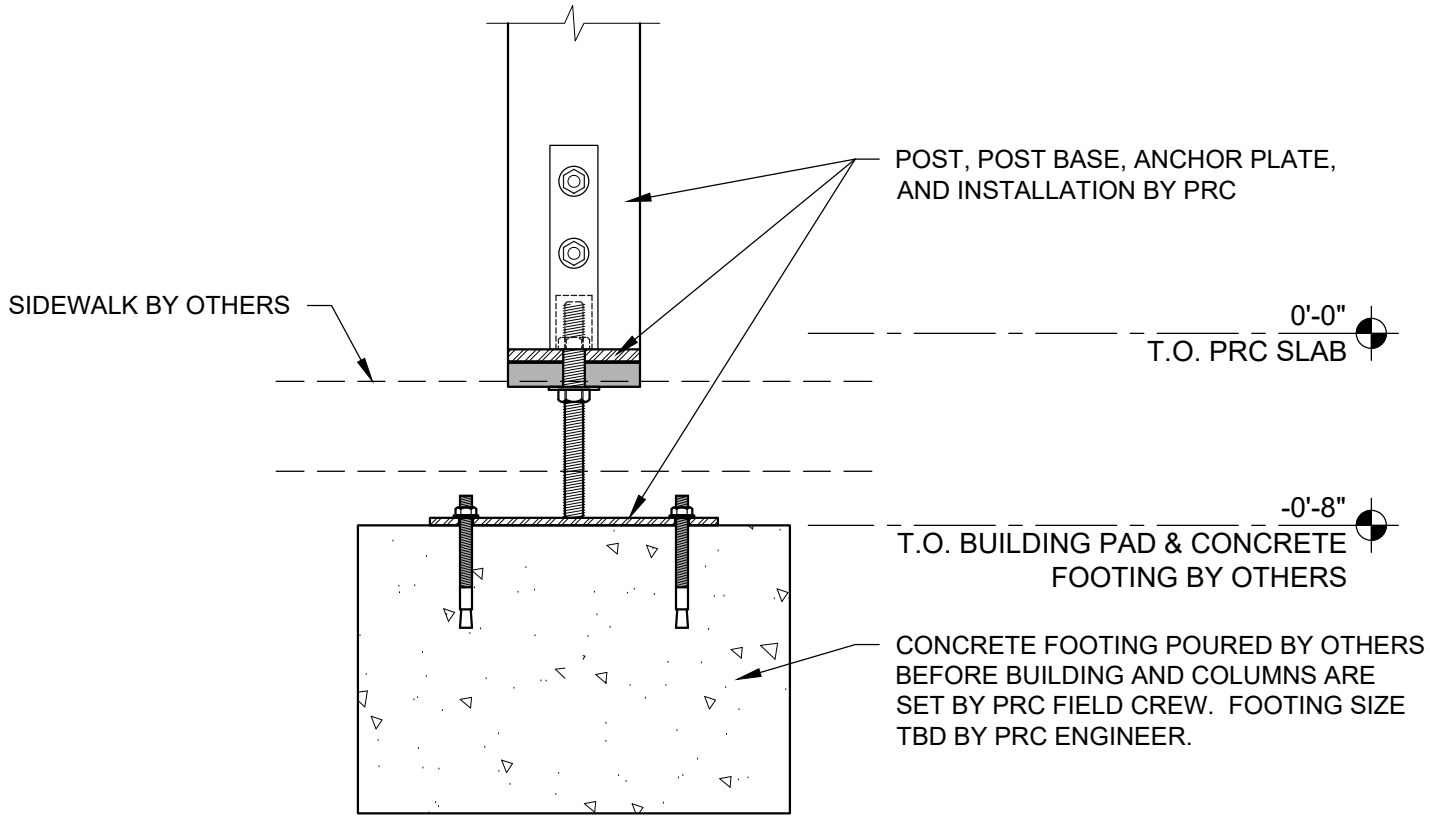

1
FD-5

CONCRETE FOOTING DETAIL

SCALE: NOT TO SCALE

PUBLIC RESTROOM COMPANY
Building Better Places To Go.
Ph: 888-888-2060 | Fax: 888-888-1448

COPYRIGHT 2025, PUBLIC RESTROOM COMPANY THIS MATERIAL IS THE EXCLUSIVE PROPERTY OF PUBLIC RESTROOM COMPANY AND SHALL NOT BE REPRODUCED, USED, OR DISCLOSED TO OTHERS EXCEPT AS AUTHORIZED BY THE WRITTEN PERMISSION OF PUBLIC RESTROOM COMPANY.

BUILDING TYPE: **RESTROOM / STORAGE BUILDING**

PROJECT: **SIERRA CREEK PARK**
NORTH HIGHLANDS PARKS & REC DISTRICT, CA

DATE: 05/20/2025
PROJECT #: 11307B
DRAWN BY: JAG
SHEET: **FD-5**
5 OF 5

~NOT FOR CONSTRUCTION ~ PRELIMINARY DESIGN DRAWING ONLY ~ DO NOT SCALE, DIMENSIONS PRESIDE